Date Submitted: 2/5/18 Clerk

Ledgeview
Set your sights high

CONDITIONAL USE PERMIT APPLICATION

Ledgeview Zoning & Planning Commission

This application form must be completed online at https://townofledgeview.zoninghub.com/
Hard copy applications will not be accepted.

Completed application must be submitted to the Town Clerk no less than fourteen (14) days prior to the first Monday of the month before 12:00pm (noon) to be included on that month's ZPC agenda Zoning and Planning Commission meets the second Wednesday after the first Monday of the month at 6:00 p.m. at the Ledgeview Municipal Building.
Click here for the ZPC meeting calendar.

A Conditional Use Permit application review fee of **$200.00** must be submitted with materials

---

1) Applicant Information

Name: Jason Pansier

Business Name: Ledgeview Farms

Street Address: 3875 Dickinson Road City/State: DePere, WI Zip: 54115

Telephone: 920-655-3875 Fax: Email: jasonpansier@gmail.com

Firm Preparing Plans: Roach & Associates, LLC Contact: John Roach

Street Address: 856 North Main St City/State: Seymour, WI Zip: 54165

Telephone: 920-833-6340 Fax: 920-833-9851 Email: john@jmroach.com

All correspondence on this application should be sent to: ☑ Property Owner, OR ☑ Agent John Roach

---

2) Property Owner Information *This section can be left blank if the same as above.*

Name:

Business Name

Street Address: City/State: Zip:

Telephone: Fax: Email:

---

3) Information regarding requested Conditional Use Permit

Address/Location: 3499 Lime Kiln Road, Green Bay WI 54311

Town and Range: T23N R21E

Parcel ID Number: D-168, D-169

Zoning District: Ledgeview

Size of parcel in acres: 137

Sewer: ☐ Municipal ☑ Septic/Mound

Water: ☐ Municipal ☐ Private Water Trust ☐ Private Well

Briefly describe the Proposed Site Use:

The construction of a Waste Storage Facility and Waste Transfer Systems.

Please provide a Legal Description below:

Parcel D-168, That PRT OF NW1/4 SW1/4 SEC 28 T23N R21E DESC IN 918 R 241 BCR EX J7892-36 EX RDS

PARCEL D-169. SW1/4 OF SW1/4 T23N R21E EX RDS

****Please see Sec 135 - 251 for additional information on Conditional Uses****

Notes

- Attendance by the applicant is strongly encouraged at both Zoning and Planning Commission and Town Board meetings where action/approval is to take place. It is the policy of the Zoning and Planning Commission to give applicants the opportunity to speak at such meetings. Contact the Town Clerk for the meeting schedule.
- The applicant/owner of the above parcel(s) hereby gives permission to the Town of Ledgeview, its staff/employees, agents and/or appointees to enter the property for the purpose of executing their duties associated with this request and following proper notification to applicant/owner.
- Upon approval of request, check with the Ledgeview Town Clerk for any necessary permits.

4) Applicant Declarations

- The signer attests that the application has been completed accurately and all required materials have been submitted.
- Please note that the application will NOT be accepted without the signature of the property owner.

I HEREBY CERTIFY THAT I HAVE READ AND FULLY UNDERSTAND THE CONDITIONAL USE PERMIT PROCEDURE AND FAILURE TO COMPLY WITH TOWN REQUIREMENTS WILL RESULT IN THIS APPLICATION BEING WITHHELD FROM CONSIDERATION.

Signature of the Property Owner (required):	*Signature of the Applicant ("Agent" for the owner):*
Jason Pansier	John Roach
Print Name:	*Print Name:*
2-1-18	2-1-18
Date:	*Date:*

5) Submittal Requirements

Each submittal shall consist of the following materials. Please note that ALL digital files MUST be in PDF format with a minimum 300dpi resolution.

- A detailed statement by the applicant describing the intended use and how the proposed conditional use will conform to standards set forth in the respective zone districts, as per Section 250 of the Zoning code
- One (1) full set of building plans
- 11 x 17 property site plan
- Completed Conditional Use Permit Application

6) Submittal Checklists (completion required for application)

A. Written Description of the intended use describing in reasonable detail the:

- [x] Full name and contact information of the petitioner and / or agent, and property owner, if different;
- [x] Full name and contact information of petitioner's engineers / surveyors / architects, and other design professionals used in conditional use permit application preparation;
- [x] Existing zoning district(s) and proposed zoning district(s) if different; Conditional Use Permit Attachment
- [x] Current land uses present on the subject property; Conditional Use Permit Attachment
- [x] Proposed land uses for the subject property;
- [x] Land use designation(s) as depicted on the adopted Comprehensive Plan; Agricultural
- [ ] Projected number of residents, employees, and / or daily customers; N/A
- [x] Description of existing environmental features;
  2017 Waste Storage Facility + Runoff Management System - Site Assessment

- [ ] Proposed amount of dwelling units, floor area, Open Space area, and landscape surface area, expressed in square feet and acreage to the nearest one-hundredth of an acre; N/A

- [ ] Resulting site density, Floor Area Ratio as calculated using the criteria established in Sec 135 – 8, Open Space Ratio, and Landscape Surface Area Ratio, as defined by Sec 135 – 8; N/A

- [x] Operational considerations relating to hours of operation, projected normal and peak water usage, sanitary sewer or septic loadings; Conditional Use Permit Attachment

- [x] Operational considerations relating to potential nuisance creation pertaining to the appropriate design of street access, traffic visibility, parking, loading, exterior storage, exterior lighting, vibration, noise, air pollution, odor, electromagnetic radiation, glare and heat, fire and explosion, toxic or noxious materials, waste materials, drainage, and hazardous materials;
  Conditional Use Permit attachment

- [x] Traffic generation;
  Conditional Use Permit attachment

- [ ] Any other information pertinent to adequate understanding by the Plan Commission of the intended use and its relation to nearby properties; N/A

- [x] Possible future expansion and related implications, and; No expansion expected

- [ ] Material Safety Data Sheets (MSDS) for all materials anticipated to be used or stored on site; Exterior building and fencing materials; N/A

B. Property Site Plan drawing which includes:

- [x] A title block which provides all contact information for the petitioner and / or agent, and property owner if different;
  2017 Waste Storage Facility + Runoff Management System and Construction Plans

- [x] Full name and contact information of petitioner's engineers / surveyors / architects, and other design professionals used in conditional use application preparation;
  2017 Waste Storage Facility + Runoff Management System and Construction Plans

- [x] The date of the original plan and the latest date of revision to the plan;
  2017 Waste Storage Facility + Runoff Management System and Construction Plans

- [x] A north arrow and a graphic scale;
  2017 Waste Storage Facility + Runoff Management System and Construction Plans

- [x] All property lines and existing and proposed right-of-way lines with bearings and dimensions clearly labeled;
  2017 Waste Storage Facility + Runoff Management System and Construction Plans

- [ ] All existing and proposed easement lines and dimensions with a key provided and explained on the margins of the plan as to ownership and purpose; N/A

- [x] All required building setback and offset lines, including dimensions from structures to property lines;
  2017 Waste Storage Facility + Runoff Management System and Construction Plans

- [x] All existing and proposed buildings, accessory structures, and paved areas, including building entrances, walks, drives, decks, patios, fences, walls;
  2017 Waste Storage Facility + Runoff Management System and Construction Plans

- [x] All existing and proposed utility and drainage systems, connections, and fixtures;
  2017 Waste Storage Facility + Runoff Management System and Construction Plans

- [x] The location and dimension of all access points onto public streets including cross-section drawings of the entry throat;
  2017 Waste Storage Facility + Runoff Management System and Construction Plans

- [ ] The location, type, height, size and lighting of all signage on the subject property; N/A

- [ ] The location of all outdoor storage and refuse disposal areas and the design of all screening devices; N/A

- [ ] The location and dimension of all loading and service areas on the subject property and labels indicating the dimension of such areas; N/A

- [ ] The location and dimension of all on-site parking (and off-site parking provisions if they are to be employed), including a summary of the number of parking stalls provided versus required by Sec 135 – 124; N/A

- [ ] The location, height, design/type, illumination power and orientation of all exterior lighting on the subject property – including the clear demonstration of compliance with a limit of 0.5 foot candles at all property lines; N/A

- [ ] The location and type of any permanently protected green space areas; N/A

- [x] The location and delineation of all wetlands, escarpments, uplands, or other unique environmental features; 2017 Waste Storage Facility + Runoff Management System + Construction Plans
- [x] The location of existing and proposed drainage facilities; 2017 Waste Storage Facility + Runoff Management System and Construction Plans
- [ ] In the legend, data for the subject property:
  - a) Lot Area measured in square feet and acres to the nearest one-hundredth of an acre;
  - b) Floor Area measured in square feet using the criteria in Sec 135 - 8; N/A
  - c) Open Space Area as defined in Section 8 and as calculated using the criteria of Sec 135 - 8; N/A
  - d) Building Height as defined and calculated using the Sec 135 - 8 of the Zoning Code N/A

Submit all documents to:
https://townofledgeview.zoninghub.com/

Questions:
E: cnelson@ledgeviewwisconsin.com
P: (920) 336 – 3360
F: (920) 336 – 8517

For Office Use Only

Submittal Date: 2/5/18 **Staff Signature:** Charlotte Nelson

Fees Paid: Y / ~~N~~ Ck# 13075 Roach & Associates, LLC

Ledgeview Farm, LLC Conditional Use Permit Attachment

Incorporated by Reference: Appendix A of the Ledgeview Farm, LLC Livestock Siting Application

Applicant Statement of Intended use
The intended use is to construct a concrete lined Waste Storage Facility to store livestock waste from dairy cattle, feed pad leachate and runoff from a Concrete Animal Yard. A Waste Transfer System will be installed from the Feed Storage Area and the Concrete Animal Yard, to facilitate the transfer of runoff to the proposed Waste Storage Facility. This is a permitted use for the agricultural property that is zoned A-1 Agriculture-Farmland Preservation District (AG-FP) and A-2 Agriculture District.

The proposed plans conform to the requirements found in Wis. Adm. Code ch. ATCP 51 Livestock Facility Siting. A Conditional Use Permit is required by the Town of Ledgeview.

Operational considerations related to hours of use
Under normal conditions the production side will receive limited traffic from 4:00 a.m. to 10:00 p.m. During these times feeding the livestock and manure deliveries to the proposed waste storage will occur. In addition, feed will be delivered to the site by local venders. When the manure is removed from the Waste Storage Facility, primarily in the fall, manure tanker traffic will increase as manure is transported to crop fields. Some of the manure will be applied via drag house and injected directly into the soil.

Operational considerations relating to potential nuisance creation traffic and odor
Based upon the type of manure that will be added (straw laden heifer manure) to the Waste Storage Facility, a crust is expected to form over the top of the Waste Storage Facility. The crust will greatly reduce the odor and the amount of manure related gases that will be released. Most of the time, no odor is expected to be detectable off of the production site. See Appendix A, Worksheet 2 – Odor Management of the Ledgeview Farm, LLC Livestock Facility Siting Application.

TO VERIFY AUTHENTICITY, SEE REVERSE SIDE FOR DESCRIPTION OF THE 11 SECURITY FEATURES

ROACH & ASSOCIATES, LLC
PH: 920-833-6340
856 N. MAIN STREET
SEYMOUR, WI 54165

COMMUNITY FIRST CREDIT UNION

13075

79-8280/2759

2/1/2018

PAY TO THE ORDER OF Town of Ledgeview $ **200.00

Two Hundred and 00/100********** DOLLARS

Town of Ledgeview
3700 Dickinson Road
De Pere, WI 54115

MEMO:

AUTHORIZED SIGNATURE

⑈013075⑈ ⑆275982801⑆ 2080984⑈

ROACH & ASSOCIATES, LLC
Town of Ledgeview

13075

2/1/2018

Date	Type	Reference	Original Amt.	Balance Due	Discount	Payment
2/1/2018	Bill	Ledgeview	200.00	200.00		200.00
					Check Amount	200.00

Checking 200.00

HUSCH BLACKWELL

Eric M. McLeod
Partner

33 E. Main Street, Suite 300, P.O. Box 1379
Madison, WI 53701-1379
Direct: 608.234.6056
Fax: 608.258.7138
Eric.McLeod@huschblackwell.com

February 26, 2018

VIA FACSMILE

Philip J. Danen
Chairman
Town of Ledgeview
3700 Dickinson Road
De Pere, WI 54115

RE: Ledgeview Farm, LLC

Mr. Danen:

This firm represents Ledgeview Farm, LLC with respect to its planned livestock facility expansion in the Town of Ledgeview. Ledgeview Farm submitted its application for local approval on December 6, 2017. By letter dated January 19, 2018, you contended that the application was not complete and identified various items that Ledgeview Farm must submit in order to obtain a completeness determination from the Town. On February 5, 2018, Ledgeview Farm submitted all of the information that was requested by you in your January 19 letter.

Pursuant to ATCP 51.30(5) the Town was required to provide Ledgeview Farm with a completeness determination within 14 days of the February 5 submission. Such a determination was therefore due on or before February 19, 2018. To date, no such completeness determination has been provided by the Town. Instead, by letter dated February 16, 2018, you acknowledged that the Town was in receipt of the "supplementary materials and will provide a response to the submittal soon."

Given the Town's clear violation of ATCP 51.30(5), the Town has waived its right to take any further action with regard to the completeness of Ledgeview Farm's application. We demand that the Town now proceed to take action on the application within the time limits mandated by the Siting Law. The Town's failure to do so will be regarded as refusal to act in a good faith effort to comply with the Siting Law and will compel Ledgeview Farm to seek relief from the Livestock Facility Siting Review Board.

Sincerely,

Eric M. McLeod
Partner

EMM/ljg

cc: Sarah Burdette, Town Administrator (via E-mail, sburdette@ledgeviewwisconsin.com)
Charlotte K. Nelson, Deputy Clerk (via E-mail, cnelson@ledgeviewwisconsin.com)

StaffordRosenbaum LLP
Attorneys

Member of Geneva Group International
The Leading Global Alliance of Independent Professional Firms

Paul G. Kent
222 West Washington Avenue, Suite 900
P.O. Box 1784
Madison, WI 53701-1784
pkent@staffordlaw.com
608.259.2665

Vanessa D. Wishart
222 West Washington Avenue, Suite 900
P.O. Box 1784
Madison, WI 53701-1784
vwishart@staffordlaw.com
608.210.6307

March 1, 2018

VIA EMAIL AND U.S. MAIL
(Eric.McLeod@huschblackwell.com)

Eric M. McLeod
Attorney at Law
Husch Blackwell
33 E. Main Street, Suite 300
P.O. Box 1379
Madison, WI 53701-1379

RE: Ledgeview Farm, LLC

Dear Attorney McLeod:

We are representing the Town of Ledgeview with respect to Ledgeview Farm, LLC's planned livestock facility expansion. We are in receipt of your correspondence dated February 26, 2018, in which you incorrectly assert that the Town is in violation of Wis. Admin. Code § ATCP 51.30(5). Contrary to your assertion, ATCP 51.30(5) provides that the Town has fourteen days after determining that Ledgeview Farm's application is complete within which to notify Ledgeview Farm of such completeness.

As the Town stated in prior correspondence dated February 16, 2018, the Town is in the process of diligently reviewing the supplemental materials that Ledgeview Farm submitted on February 5, 2018, to determine whether Ledgeview Farm's application is complete. Once this determination is made, the Town will provide notice to Ledgeview Farm in accordance with ATCP 51.30(5).

Madison Office
222 West Washington Avenue
P.O. Box 1784
Madison, Wisconsin
53701-1784
608.256.0226
888.655.4752
Fax 608.259.2600
www.staffordlaw.com

Milwaukee Office
1200 North Mayfair Road
Suite 430
Milwaukee, Wisconsin
53226-3282
414.982.2850
888.655.4752
Fax 414.982.2889
www.staffordlaw.com

If you have any further questions, please contact us.

Best regards,

STAFFORD ROSENBAUM LLP

Vanessa Wishart

Vanessa D. Wishart
Paul G. Kent

PGK/VDW:mai
cc: Philip J. Danen, Town Chairman (via email)
Sarah Burdette, Town Administrator (via email)

StaffordRosenbaum LLP
Attorneys

Member of Geneva Group International
The Leading Global Alliance of Independent Professional Firms

Paul G. Kent
222 West Washington Avenue, Suite 900
P.O. Box 1784
Madison, WI 53701-1784
pkent@staffordlaw.com
608.259.2665

Vanessa D. Wishart
222 West Washington Avenue, Suite 900
P.O. Box 1784
Madison, WI 53701-1784
vwishart@staffordlaw.com
608.210.6307

March 9, 2018

VIA EMAIL AND U.S. MAIL
(Eric.McLeod@huschblackwell.com)

Eric M. McLeod
Attorney at Law
Husch Blackwell
33 E. Main Street, Suite 300
P.O. Box 1379
Madison, WI 53701-1379

RE: Ledgeview Farm, LLC

Dear Attorney McLeod:

We are writing on behalf of the Town of Ledgeview to update you on the status of the applications that Ledgeview Farms, LLC filed with the Town. The timeline for the Conditional Use Permit (CUP) application started with the submittal of the CUP application on February 5, 2018. A decision on the CUP application must and will be made within 120 days of the date the application was filed with the Town, which would be June 5, 2018.

The Town is proceeding on the CUP application in accordance with state law and the Town's ordinances. *See* Town of Ledgeview Ord. § 135-251. Pursuant to Town ordinance, The Zoning and Planning Committee will first review the application and may make a recommendation to the Town Board. The Town Board will then hold a hearing on the application. Although a hearing date has not yet been scheduled, the Town anticipates holding this hearing in late April or early May.

The Town also continues to diligently review the livestock facility application submitted by Ledgeview Farm, LLC on December 6, 2017, and the amended application submitted on February 5, 2018. There are a few remaining technical items the Town requests in order to

complete its application review. These items are outlined in the ATCP 51 Application Review Checklist enclosed with this correspondence and further explained herein:

- Y1 Animal Lot – Headquarters Site: Please provide plans illustrating the Headquarters Site Y1 Yard Runoff Control Measures listed in Attachment 2. Please provide an explanation for how manure is accounted for in the storage calculations, outline the presumed conditions, and illustrate on corresponding plans. Please clarify whether freeboard is accounted for.
- Y2 Animal Lot – Headquarters Site: Please provide an explanation of feed storage and runoff control measures at Headquarters Site.
- Detention Basin – Feed Area: As long as the detention basin drains dry, it can be omitted from the odor score. However, the basin will be wet following rain events and snow thaws, and the build-up of organic residues, silage, etc. will be left behind during such events. Please provide a management plan providing clarification and details regarding cleaning and maintenance practices (ex. frequency of cleaning, dredging, removal of materials) so that a determination of whether the basin must be included in the odor score can be made.

Once the Town receives these additional materials, the Town hopes to conclude its review and will submit a notification of completeness in accordance with ATCP 51.30(5). The Town is aware that it must make a decision on the livestock facility application within 90 days of a completeness notification. The Town anticipates that the CUP process outlined above will align with this 90 day timeframe.

Please contact me with any questions.

Best regards,

STAFFORD ROSENBAUM LLP

Vanessa Wishart

Vanessa D. Wishart
Paul G. Kent

PGK/VDW:mai
Enclosures
cc: Philip J. Danen, Town Chairman (via email)
Sarah Burdette, Town Administrator (via email)

L:\DOCS\030591\000001\CORR\3G31175.DOCX
0309181603

ATCP 51 Application Review Checklist
Completeness Determination

This review is confined to considerations related to completeness of the application, including selective checks for consistency. This completeness review does not include an evaluation of the underlying documentation submitted with the application (e.g. plans and specifications) to determine compliance with state standards. Review for compliance with the siting standards is the next step after the completeness determination.

Applicant (Livestock Facility Name): Ledgeview Dairy
Local unit of government: Town of Ledgeview

The application was provided by (e.g. applicant / consultant / political subdivision):
Date application and related documentation was submitted to DATCP:
Reviewed by (staff):
Date review completed:

Review of Application, Worksheets and Attachments

(numbers refer to sections of the referenced application materials)

Application Form pages 390-11 to 390-20

Completeness Considerations	Complete	Incomplete	Not submitted
1) Area map # 9 – legible, scaled properly, appropriately labeled	☒	☐	☐
2) Site map (plan) # 10 - legible, scaled properly, appropriately labeled	☒	☐	☐
3) Location of livestock structures # 11 - map or narrative	☐	☒	☐
4) Employee Training Plan # 12 - addresses required elements	☒	☐	☐
5) Environmental Incident Response Plan # 13 - addresses required elements.	☒	☐	☐
6) Optional Odor Management Plan # 14 - addresses required elements (only submitted if credit taken on Worksheet 2)	☒	☐	☐
7) Page 390-20 is signed (last page)	☒	☐	☐

Notes:

Worksheet 1 – Animal Units

Completeness Considerations	Complete	Incomplete	Not submitted
8) Animal units for each livestock type are calculated, and all types are summed for a total	☒	☐	☐
9) Total animal units calculated in Worksheet 1 is consistent with the maximum number of animal units listed in # 8 on p. 390-17	☒	☐	☐
10) Worksheet is signed	☒	☐	☐

Notes:

Worksheet 2 – Odor Management

Completeness Considerations	Complete	Incomplete	Not submitted
11) Facility is exempt and the appropriate box checked Note: Expanding facilities under 1000 AU, new facilities under 500 AU, and any facility greater than 2500 feet from nearest affected neighbor are exempt, but may voluntarily complete and comply with this standard	☒	☐	☐
12) Tables A and B are completed, or a copy of the spreadsheet printout is attached (skip this if exempt)	☒	☐	☐
13) Worksheet is signed	☒	☐	☐

Notes:

WPDES permit substitution for Worksheets 3, 4, and 5

(If completed, skip sections of this checklist for Worksheets 3, 4, and 5)

Completeness Considerations	Complete	Incomplete	Not applicable
14) A current WPDES permit is attached (at minimum includes a cover letter demonstrating the permit has not expired)	☐	☐	☒
15) The WPDES permit covers an equal or greater number of animal units housed in the same locations proposed in the siting application	☐	☐	☒

Notes:

Worksheet 3 – Waste and Nutrient Management

Completeness Considerations	Complete	Incomplete	Not submitted
16) Worksheet 3 Part A	☒	☐	☐
17) Worksheet 3 Part B, including maps required by # 2	☒	☐	☐
18) Worksheet 3 Part B - animal unit number in # 1 is consistent with the maximum animal unit number in Worksheet 1 and # 8 on p. 390-17	☒	☐	☐
19) Worksheet 3 Parts A and B are signed	☒	☐	☐
20) Worksheet 3 Part C (required when > 500 AU or less than the ratio in Worksheet 3 Part B # 6)	☒	☐	☐
21) Worksheet 3 Part C is signed by a Qualified Nutrient Management Planner	☒	☐	☐
22) The total acres of cropland available for land application listed in Worksheet 3 Part B # 4 is consistent with the total acres listed in Worksheet 3 Part C	☒	☐	☐
23) Worksheet 3 Part C is signed if required	☒	☐	☐

Notes:

Worksheet 4 – Waste Storage Facilities

Completeness Considerations	Complete	Incomplete	Not submitted
24) All new or substantially altered storage facilities are identified, and design specifications attached	☒	☐	☐
25) All existing storage facilities are identified, and the appropriate verification checkbox marked	☒	☐	☐
26) Closure specifications are attached (if applicable)	☒	☐	☐
27) Combined useable storage capacity is consistent with the total waste storage capacity on Worksheet 3 Part A (sum of numbers in column A)	☒	☐	☐
28) Signed by registered professional engineer (whose license number and seal are provided) or a certified agricultural engineering practitioner	☒	☐	☐

Notes:

Worksheet 5 – Runoff Management

Completeness Considerations	Complete	Incomplete	Not submitted
29) All the following are identified (map or narrative): new or substantially altered animal lots, existing animal lots, new or substantially altered feed storage, existing feed storage	☒	☐	☐
30) For each new and substantially altered animal lot (# 1), design specifications are attached	☐	☒	☐
31) An explanation is attached for any existing lots with minor alterations (# 2 and # 3)	☐	☒	☐
32) For each new and substantially altered feed storage for high moisture feed (# 3), design specifications are attached	☒	☐	☐
33) Signed by registered professional engineer (whose license number and seal are provided) or a certified agricultural engineering practitioner	☒	☐	☐
34) Worksheet is signed by applicant	☒	☐	☐

Notes:

If applicable, additional documentation for more stringent requirements (can only be required if the local government meets requirements for more stringent regulation)

Completeness Considerations	Complete	Incomplete	Not submitted
35) Required submissions are provided	☐	☒	☐
36) Design specifications are attached (if required)	☐	☒	☐

Notes:

I:\lw\LIVESTOCK FACILITY SITING\Information and Education\checklists\Completeness Review Checklist 4-2009.doc

Roach & Associates, LLC

Dairy Business and Management Consulting
Environmental Engineering

856 N Main Street • Seymour, WI 54165 • Phone 920-833-6340 • Fax 920-833-9851

March 19, 2017

Philip J Danen, Chairman
Town of Ledgeview
3700 Dickinson Road
DePere, WI 54115

Re: March 9, 2018 Town of Ledgeview Request for Additional Information – Ledgeview Farms, LLC Livestock Siting Application

Mr. Danen:

On behalf of Ledgeview Farms, LLC (LF) Roach & Associates, LLC (Roach) is providing this response to the March 9, 2018 Request for Additional Information.

Y1 Animal Lot - Headquarters Site: Please provide plans illustrating the Headquarters Site Y1 Yard Runoff Control Measures listed in Attachment 2. Please provide an explanation for how manure is accounted for in the storage calculations, outline the presumed conditions, and illustrate on corresponding plans. Please clarify whether freeboard is accounted for.

Please find attached an amended Attachment 2. The amended Attachment 2 contains a site plan, cross section and curb and wall detail. These construction plans were included in the original Attachment 2. It is unclear what additional plans the Town of Ledgeview is requesting, please specify.

The amended Attachment 2 narrative more clearly defines the design conditions and the assumptions used in the Y1 Yard runoff containment volume.

Y2 Animal Lot - Headquarters Site: Please provide an explanation of feed storage and runoff control measures at Headquarters Site.

Neither the Headquarters Site nor the Heifer Site contains an Y2 Yard or Animal Lot. As a result, it is unclear to me what the Town of Ledgeview is referring to with regard to the above request.

Detention Basin - Feed Area: As long as the detention basin drains dry, it can be omitted from the odor score. However, the basin will be wet following rain events and snow thaws, and the build-up of organic residues, silage, etc. will be left behind during such events. Please provide a management plan providing clarification and details

regarding cleaning and maintenance practices (ex. frequency of cleaning, dredging, and removal of materials) so that a determination of whether the basin must be included in the odor score can be made.

Although we don't believe the Detention Basin is a Waste Storage Facility it has been added to the Odor Score Worksheets for Cluster B Heifer Site. The amended Exhibit 12 is attached. The lowest Order Score is 558 for neighbors N1 and E1.

Regards,

John Roach

Cc: Jason Pansier/Ledgeview Farms, LLC
Eric McLeod/ Husch Blackwell, LLP

Design Rational for the Headquarters Site Y1 Yard Runoff Control Measures - Amended

Introduction

Ledgeview Farm, LLC (LF) is an existing dairy that conducts operations at two sites in the Town of Ledgeview, Brown County. The Headquarters Farm is located at 3875 Dickinson Road, De Pere, WI 54115 and the Heifer Farm is located at 3688 Lime Kiln Road, Green Bay, WI 54311. The proposed modifications, located at the Headquarters Farm, include adding a curb along the east and west edge of the Y1 Yard to contain runoff. The runoff will be transferred to waste storage following all rain events.

Operating Objectives

The Y1 Yard currently does not contain the runoff from a 25-year 24-hour rain event. A curb will be installed along the east and west edges of the Y1 Yard. The south edge of the Y1 Yard has an existing 12" tall feeding curb that will contain runoff. The North edge of the Y1 Yard is bordered by the L5 Barn, which will serve as containment. Following all rain events, bedding from the L6 Barn will be mixed with runoff and the mixture loaded onto watertight spreaders for transfer to waste storage.

Project Description

The primary components of the proposed modifications are identified below. More detailed descriptions are found on the attached construction drawings.

- Curb detail for the west curb
- Curb detail for the east curb

The surface of the Y1 Yard is irregular as shown on the construction plans. As such, the volume of runoff storage on the Y1 Yard following the installation of the east and west curbs has been calculated in CAD and is found in the attached Cut/Fill Report.

Design Assumptions

- 300 head of 250 pound cattle housed on the Y1 Yard & L5 Barn
- Daily manure generation .32 ft^3 per day (96 ft^3)
- 50% of the manure generated is deposited on the Y1 Yard (48 ft^3)
- Operation and Maintenance Plan states the manure will be removed from the Y1 Yard daily
- Volume calculations assume two (2) days of manure are on the Y1 Yard at the time of a 25 Yr. 24 Hr. rain event
- Volume of storage capacity of the Y1 Yard following the installation of the proposed improvements is 3,439 ft^3 (25,730 gallons - Cut/Fill Report)
- Volume of a 25 Yr. 24 Hr. rain event is 2,070 ft^3 (15,483 gallons – TR 55)
- Volume of storage available on the Y1 Yard assuming two days of manure are on the Y1 Yard at the time of a 25 Yr. 24 Hr. rain event 3,391 ft^3 (25,365 gallons)
- Freeboard volume of storage in excess of two days of manure and a 25 Yr. 24 Hr. rain event is 1,321 ft^3 (9,881 gallons)

Cut/Fill Report

Generated: 2018-03-13 17:44:10

By user: matt

Drawing: F:\Clients\Ledgeview Farms, LLC\CADD\F:\Clients\Ledgeview Farms, LLC\CADD\Ledgeview.dwg

Volume Summary

Name	Type	Cut Factor	Fill Factor	2d Area (Sq. Ft.)	Cut (Cu. Yd.)	Fill (Cu. Yd.)	Net (Cu. Yd.)
Y1 Concrete Yard Volume	full	1.0000	1.0000	5976.32	0.0	127.4	127.4<Fill>

Totals

	2d Area (Sq. Ft.)	Cut (Cu. Yd.)	Fill (Cu. Yd.)	Net (Cu. Yd.)
Total	5976.32	0.0	127.4	127.4<Fill>

* Value adjusted by cut or fill factor other than 1.0

STORAGE VOLUME (FILL) = 127.4 yd³

= 3,439.8 ft³

= 25,730 GALLONS

RUNOFF, 25 yr 24hr = 15,843 GALLONS

– AVAILABLE STORAGE EXCEEDS 25 yr, 24 hr RAINFALL RUNOFF

Exhibit 8-12

TR 55 PEAK RUNOFF CALCULATION (GRAPHICAL METHOD)

ver 5-2008

CLIENT: Ledgeview Farm COUNTY: BROWN DATE: 5/24/2011
DSN BY: Roach CHK BY: DATE:
COMMENTS: Animal Lot Headquarters Farm

Drainage Area	0.14	Acres
Runoff Curve Number	98.00	

Time of Concentration	0.07	Hours

Frequency	yr		2	5	10	25	50	100
Rainfall, P (24 hour)	in	1.00	2.5	3.2	3.7	4.3	4.8	5.1
Initial Abstraction, Ia	in	0.00	0	0	0	0	0	0
Ia/P ratio		0.00	0.000	0.000	0.000	0.000	0.000	0.000
Unit Peak Discharge, qu	cfs/ac/in	1.72	1.720	1.720	1.720	1.720	1.720	1.720
Runoff	in	0.83	2.31	3.01	3.51	4.11	4.60	4.90
	ac-ft	0.01	0.03	0.03	0.04	0.05	0.05	0.06
Peak Discharge, qp	cfs	0.20	0.6	0.7	0.8	1.0	1.1	1.2

Total Runoff One Inch Rain	=	0.01 ac-ft	419 cubic feet	3,132 gallons
Total Runoff 25 year Event	=	0.05 ac-ft	2,070 cubic feet	15,483 gallons
Peak Flow	=		1.0 cfs	440 gpm

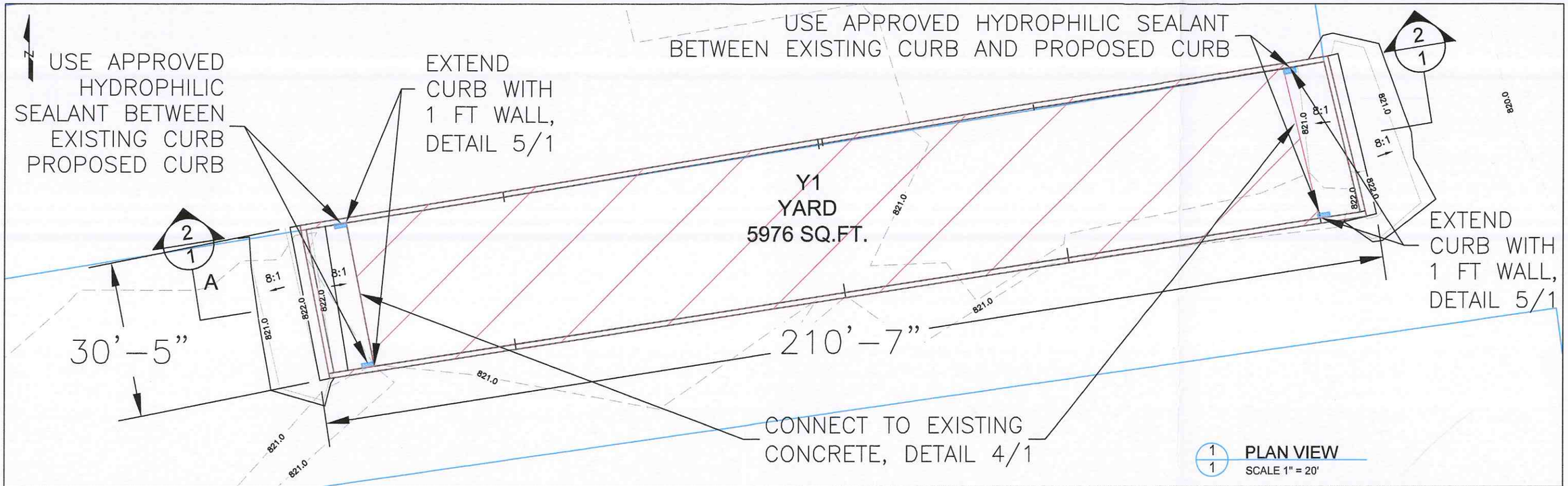

1/1 PLAN VIEW
SCALE 1" = 20'

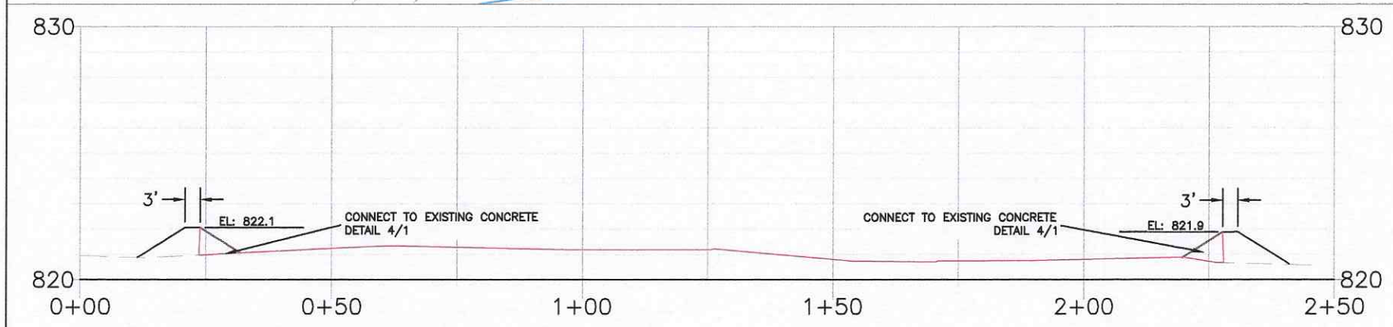

2/1 SECTION A
SCALE: 1" = 30' ~ VERTICAL EXAGGERATION = 5'

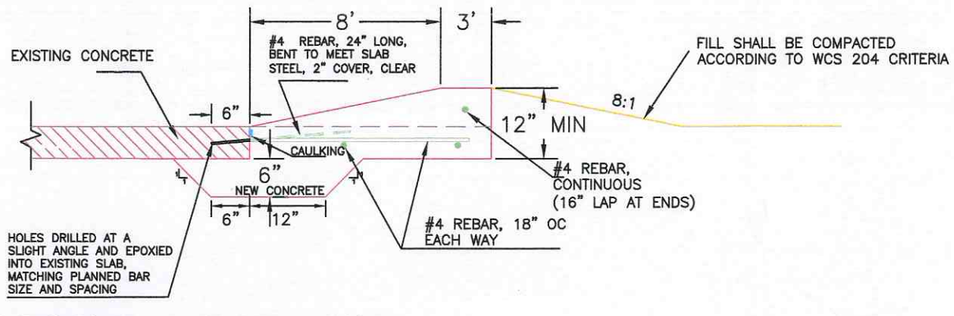

4/1 CONNECT TO EXISTING CONCRETE DETAIL
NTS

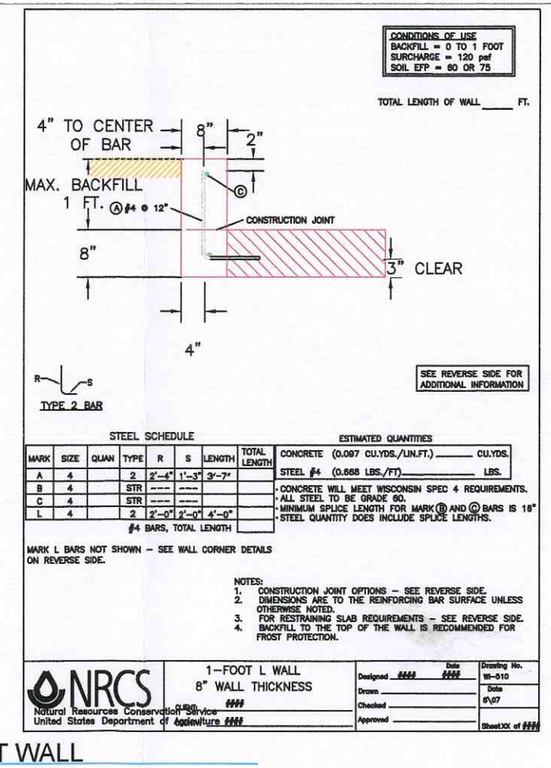

5/1 1 FT WALL
NTS

DATE: 2/2/2018	REVISION DATE	BY	DESCRIPTION OF REVISION	REVISIONS BY	DATE	DESCRIPTION OF REVISION	
DRAWN BY: MTS	*	*	*	*	*	*	
CHECKED BY: JMR							

LEDGEVIEW FARM, LLC
2017 WASTE STORAGE FACILITY AND RUNOFF MANAGEMENT SYSTEMS
BROWN COUNTY, WISCONSIN

SCALE: VARIES

HEADQUARTERS
Y1 YARD

Roach & Associates, LLC
Dairy Business and Management Consulting
Environmental Engineering
856 North Main Street, Seymour, WI, 54165 PH: 920-833-6340 Fax: 920-833-9851

SHEET NO. 1581 1

AMENDED EXHIBIT 1A

DATE:	11/22/2017	REVISION DATE	BY	DESCRIPTION OF REVISION	REVISIONS BY	DATE	DESCRIPTION OF REVISION
DRAWN BY:	MTS	*	*	*	*	*	*
CHECKED BY:	JMR						

LEDGEVIEW FARMS, LLC
2017 WASTE STORAGE FACILITY AND LEACHATE MANAGEMENT SYSTEM
BROWN COUNTY, WISCONSIN

SCALE: 1"=300'

NEAREST NEIGHBOR SITE PLAN

Roach & Associates, LLC
Dairy Business and Management Consulting
Environmental Engineering
856 North Main Street, Seymour, WI, 54165 PH: 920-833-6340 Fax: 920-833-9851

SHEET NO. 1

Ledgeview Farm, LLC
Cluster B
Livestock Siting Distance to Neighbors

	Nearest Neighbor		
	N1	E1	S1
Livestock Structures	(feet)		
Collection Basin - CB	1,309	1,156	1,773
Waste Storage Facility - W2	361	509	1,935
Bedded Pack Barn - L1	1,226	855	1,631
Freestall Barn - L2	1,748	1,213	1,043
Concrete Yard - Y1	1,309	930	1,519
Detention Basin-FSA - DB	1,821	1,343	1,108
Feed Storage Area	1,472	1,029	1,098

Livestock Facility: **Ledgeview Farm, LLC - Cluster B**

Location: **N1 North Neighbor**

Odor Score Spreadsheet - Ver. 2.0

11/31/17

1. Animal Housing

ID	Manure Management	Generation number	Occupied Area (Ft.^{2})	Dist. to Nearest Neighbor (Ft.)	Control Practice	Reduction Factor	Control Practice	Reduction Factor	Control Practice	Reduction Factor	Predicted Odor
L1	Bedded Pack - Dairy and Beef	2	34,279	1,226	Diet manipulation	0.8	None	1	None	1	5
L2	Freestall - Dairy - Scrape (incl. Beef and Heifers on forage ration)	4	81,532	1,748	Diet manipulation	0.8	None	1	None	1	26
1C											
1D											
1E											
1F											
1G											
1H											
1I											
1J											
1K											
1L											

2. Waste Storage

ID	Storage type	Generation number	Surface Area (Ft.^{2})	Dist. to Nearest Neighbor (Ft.)	Control Practice	Reduction Factor	Control Practice	Reduction Factor	Control Practice	Reduction Factor	Predicted Odor
W2	Liquid storage - Long term (pit and tank) Open anaerobic	13	194,475	361	Natural Crust	0.3	None	1	None	1	76
CB	Liquid storage - Short term (pit and tank) Open anaerobic	28	638	1,309	None	1	None	1	None	1	2
DB	Liquid storage - Short term (pit and tank) Open anaerobic	28	9,952	1,821	None	1	None	1	None	1	28
2D											
2E											
2F											

3. Animal Lots

ID	Lot type	Generation number	Surface Area (Ft.^{2})	Dist. to Nearest Neighbor (Ft.)	Control Practice	Reduction Factor	Control Practice	Reduction Factor	Control Practice	Reduction Factor	Predicted Odor
Y1	Paved	4	42,660	1,309	Clean frequently (within 3 days)	0.4	Water Control (gutters & diversions)	0.8	None	1	5
Y2	Paved	4	4,494	1,735	Clean frequently (within 3 days)	0.4	None	1	None	1	1

Total Predicted Odor 143

4. Separation Distance

Weighted Distance to Neighbor	985
Direction of Nearest Neighbor	North
Adjusted Weighted Distance	985
Density (neighbors within 1,300 ft.)	High

5. Management

Basic Management Plans	Required
Advanced Odor Management Plan?	Yes

Separation Score	601
Basic Management Score	80
Advanced Management Score	20
Odor Score	1584 658

Livest[illegible] Facility: Ledgeview Farm, LLC - Cluster B

Locati[illegible]: E1 East Neighbor

Odor Score Spreadsheet - Ver. 2.0

11/21/17

1. Animal Housing

ID	Manure Management	Generation number	Occupied Area (Ft.^{2})	Dist. to Nearest Neighbor (Ft.)	Control Practice	Reduction Factor	Control Practice	Reduction Factor	Control Practice	Reduction Factor	Predicted Odor
L1	Bedded Pack - Dairy and Beef	2	34,279	855	Diet manipulation	0.8	None	1	None	1	5
L2	Freestall - Dairy - Scrape (incl. Beef and Heifers on forage ration)	4	81,532	1,213	Diet manipulation	0.8	None	1	None	1	26
1C											
1D											
1E											
1F											
1G											
1H											
1I											
1J											
1K											
1L											

2. Waste Storage

ID	Storage type	Generation number	Surface Area (Ft.^{2})	Dist. to Nearest Neighbor (Ft.)	Control Practice	Reduction Factor	Control Practice	Reduction Factor	Control Practice	Reduction Factor	Predicted Odor
W2	Liquid storage - Long term (pit and tank) Open anaerobic	13	194,475	509	Natural Crust	0.3	None	1	None	1	76
CB	Liquid storage - Short term (pit and tank) Open anaerobic	28	638	1,156	None	1	None	1	None	1	2
DB	Liquid storage - Short term (pit and tank) Open anaerobic	28	9,952	1,343	None	1	None	1	None	1	28
2D											
2E											
2F											

3. Animal Lots

ID	Lot type	Generation number	Surface Area (Ft.^{2})	Dist. to Nearest Neighbor (Ft.)	Control Practice	Reduction Factor	Control Practice	Reduction Factor	Control Practice	Reduction Factor	Predicted Odor
Y1	Paved	4	42,660	930	Clean frequently (within 3 days)	0.4	Water Control (gutters & diversions)	0.8	None	1	5
Y2	Paved	4	4,494	1,233	Clean frequently (within 3 days)	0.4	None	1	None	1	1

4. Separation Distance

Weighted Distance to Neighbor	841
Direction of Nearest Neighbor	East
Adjusted Weighted Distance	925
Density (neighbors within 1,300 ft.)	High

5. Management

Basic Management Plans	Required
Advanced Odor Management Plan?	Yes

Total Predicted Odor	143
Separation Score	601
Basic Management Score	80
Advanced Management Score	20
Odor Score	1585 558

Livest[illegible] Facility: Ledgeview Farm, LLC - Cluster B
Locati[illegible] S1 South Neighbor

Odor Score Spreadsheet - Ver. 2.0

[illegible]21/17

1. Animal Housing

ID	Manure Management	Generation number	Occupied Area (Ft.^{2})	Dist. to Nearest Neighbor (Ft.)	Control Practice	Reduction Factor	Control Practice	Reduction Factor	Control Practice	Reduction Factor	Predicted Odor
L1	Bedded Pack - Dairy and Beef	2	34,279	1,631	Diet manipulation	0.8	None	1	None	1	5
L2	Freestall - Dairy - Scrape (incl. Beef and Heifers on forage ration)	4	81,532	1,043	Diet manipulation	0.8	None	1	None	1	26
1C											
1D											
1E											
1F											
1G											
1H											
1I											
1J											
1K											
1L											

2. Waste Storage

ID	Storage type	Generation number	Surface Area (Ft.^{2})	Dist. to Nearest Neighbor (Ft.)	Control Practice	Reduction Factor	Control Practice	Reduction Factor	Control Practice	Reduction Factor	Predicted Odor
W2	Liquid storage - Long term (pit and tank) Open anaerobic	13	194,475	1,935	Natural Crust	0.3	None	1	None	1	76
CB	Liquid storage - Short term (pit and tank) Open anaerobic	28	638	1,773	None	1	None	1	None	1	2
DB	Liquid storage - Long term (pit and tank) Open anaerobic	13	9,952	1,108	None	1	None	1	None	1	13
2D											
2E											
2F											

3. Animal Lots

ID	Lot type	Generation number	Surface Area (Ft.^{2})	Dist. to Nearest Neighbor (Ft.)	Control Practice	Reduction Factor	Control Practice	Reduction Factor	Control Practice	Reduction Factor	Predicted Odor
Y1	Paved	4	42,660	1,519	Clean frequently (within 3 days)	0.4	Water Control (gutters & diversions)	0.8	None	1	5
Y2	Paved	4	4,494	1,079	Clean frequently (within 3 days)	0.4	None	1	None	1	1

Total Predicted Odor 128

4. Separation Distance

Weighted Distance to Neighbor	1,632
Direction of Nearest Neighbor	South
Adjusted Weighted Distance	1,959
Density (neighbors within 1,300 ft.)	High

5. Management

Basic Management Plans	Required
Advanced Odor Management Plan?	Yes

Separation Score	819
Basic Management Score	80
Advanced Management Score	20

Odor Score 158~~6~~91

StaffordRosenbaum LLP
Attorneys

Member of Geneva Group International
The Leading Global Alliance of Independent Professional Firms

Paul G. Kent
222 West Washington Avenue, Suite 900
P.O. Box 1784
Madison, WI 53701-1784
pkent@staffordlaw.com
608.259.2665

Vanessa D. Wishart
222 West Washington Avenue, Suite 900
P.O. Box 1784
Madison, WI 53701-1784
vwishart@staffordlaw.com
608.210.6307

April 6, 2018

VIA EMAIL AND U.S. MAIL
(Eric.McLeod@huschblackwell.com)

Eric M. McLeod
Attorney at Law
Husch Blackwell
33 E. Main Street, Suite 300
P.O. Box 1379
Madison, WI 53701-1379

RE: Ledgeview Farm, LLC

Dear Attorney McLeod:

We are writing on behalf of the Town of Ledgeview to update you on the status of the applications that Ledgeview Farms, LLC filed with the Town. The Town is proceeding with the schedule outlined in its March 9, 2018 correspondence, which includes a hearing on the CUP application in mid-May.

The Town is requesting one additional piece of information in order to make its completeness determination regarding the livestock application. In prior correspondence from February 14 and March 9, the Town requested additional information regarding management of the feed storage area at Headquarters. In case the request was not clear, the Town is requesting the following information: how will the feed storage area at Headquarters be managed to prevent significant discharge of leachate or polluted runoff? Please provide details regarding management and design practices.

L:\DOCS\030591\000001\CORR\3GB991602.DOCX
0406181609

Once the Town receives this additional information, the Town hopes to conclude its review and will submit a notification of completeness in accordance with ATCP 51.30(5). As stated above, the Town does not anticipate any delay in its CUP application procedure associated with obtaining this additional information.

Please contact me with any questions.

Best regards,

STAFFORD ROSENBAUM LLP

Vanessa Wishart

Vanessa D. Wishart
Paul G. Kent

PGK/VDW:mai
Enclosures
cc: Philip J. Danen, Town Chairman (via email)
Sarah Burdette, Town Administrator (via email)

Roach & Associates, LLC

Dairy Business and Management Consulting
Environmental Engineering

856 N Main Street • Seymour, WI 54165 • Phone 920-833-6340 • Fax 920-833-9851

April 12, 2018

Philip J Danen, Chairman
Town of Ledgeview
3700 Dickinson Road
DePere, WI 54115

Re: April 6, 2018 Town of Ledgeview Request for Additional Information – Ledgeview Farms, LLC Livestock Siting Application

Mr. Danen:

On behalf of Ledgeview Farms, LLC (LF) Roach & Associates, LLC (Roach) is providing this response to the April 6, 2018 Request for Additional Information.

The Town is requesting one additional piece of information in order to make its completeness determination regarding the livestock application. In prior correspondence from February 14 and March 9, the Town requested additional information regarding management of the Feed Storage Area at Headquarters. In case the request was not clear, the Town is requesting the following information: how will the Feed Storage Area at Headquarters be managed to prevent significant discharge of leachate or polluted runoff? Please provide details regarding management and design practices.

<u>The Following Response was provided to the Town of Ledgeview on February 2, 2018</u>

***No explanation of apparent Feed Storage at Headquarters and runoff controls.**
The Feed Storage Area at the Headquarters Site is used to store feed with a moisture content of less than 70%. The Feed Storage Area is managed to prevent any significant discharge of leachate or polluted runoff from stored feed to waters of the state.

Response:
The Feed Bunker (FB) at the Headquarters Site is 170 feet long, 55 feet wide and has 8 foot tall concrete walls on three sides. The Feed Bunker has a footprint of 9,625 ft^2 (.22 Acres). The FB is used to store haylage with a Dry Mater (DM) content of 40% to 45% DM (60% to 55% moisture).

- As required by ATCP 51.20 (3)(a) and as stated in the February 2, 2018 response, the Feed Storage Area shall be managed to prevent any significant discharge of leachate or polluted runoff from stored feed to waters of the state. The attached Operation and

Maintenance Plan will be followed by Ledgeview Farms, LLC to ensure that no significant discharge to waters of the state occurs.

- The feed stored at the Headquarters Site (FB) will store feed with a moisture content of less than 70%, as such Ledgeview Farms, LLC believes that the FB is exempt from requiring substantial alteration as found in ATCP 51.20 (3)(b)(c). The attached Operation and Maintenance shall be followed to prevent leachate and contaminated runoff from discharging to waters of the state.

Regards,

John M Roach

John Roach

Cc: Jason Pansier/Ledgeview Farms, LLC
Eric McLeod/ Husch Blackwell, LLP

Ledgeview Farms, LLC
Operation and Maintenance Plan for the Headquarters Site Feed Bunker

1. Haylage with a Dry Matter Content of greater than 40% (60% moisture) will be stored in the Feed Bunker (FB).
2. Within 12 hours after the Bunker is filled, it shall be covered with Cover Plastic (CP) to prevent rain water from infiltrating into the stored forage.
3. The CP shall be weighted down with tires to prevent wind from removing the CP and to create an air-tight barrier to promote desirable fermentation.
4. Surface water shall be diverted from entering the FB as needed to prevent clean runoff from becoming contaminated.
5. If leachate is detected, it will be contained within the structure by use of a Soil Berm. Leachate will be removed as necessary and transferred to a Waste Storage Facility or applied onto a crop field according to the current Nutrient Management Plan (NMP).
6. When feed is removed from the FB, CP will be removed only as necessary to remove feed. The CP shall be maintained to prevent infiltration of rain water into the feed.
7. At the end of the feeding day, all feed shall be removed from the concrete work surface, scraped into a pile and covered with CP to prevent infiltration of rain water into the feed.

StaffordRosenbaum LLP
Attorneys

Member of Geneva Group International
The Leading Global Alliance of Independent Professional Firms

Paul G. Kent
222 West Washington Avenue, Suite 900
P.O. Box 1784
Madison, WI 53701-1784
pkent@staffordlaw.com
608.259.2665

Vanessa D. Wishart
222 West Washington Avenue, Suite 900
P.O. Box 1784
Madison, WI 53701-1784
vwishart@staffordlaw.com
608.210.6307

April 20, 2018

VIA EMAIL AND U.S. MAIL
(Eric.McLeod@huschblackwell.com)

Eric M. McLeod
Attorney at Law
Husch Blackwell
33 E. Main Street, Suite 300
P.O. Box 1379
Madison, WI 53701-1379

RE: Ledgeview Farms, LLC

Dear Attorney McLeod:

We are writing on behalf of the Town of Ledgeview to update you on the status of the livestock facility application that Ledgeview Farms, LLC filed with the Town. The Town has determined that Ledgeview Farms' application is complete. This completeness determination does not constitute an approval of Ledgeview Farms' proposed facility or constitute a determination that the application is approvable.

Please contact me with any questions.

Sincerely,

STAFFORD ROSENBAUM LLP

Vanessa Wishart

Vanessa D. Wishart
Paul G. Kent

PGK/VDW:mai
cc: Philip J. Danen, Town Chairman (via email)
Sarah Burdette, Town Administrator (via email)

L:\DOCS\030591\000001\CORR\3GG1078.DOCX
0419181640

HUSCH BLACKWELL

Eric M. McLeod
Partner

33 E. Main Street, Suite 300, P.O. Box 1379
Madison, WI 53701-1379
Direct: 608.234.6056
Fax: 608.258.7138
Eric.McLeod@huschblackwell.com

May 3, 2018

Town of Ledgeview Board of Supervisors
c/o Sarah Burdette
Town of Ledgeview Clerk
3700 Dickinson Road
De Pere, WI 54115

Re: Ledgeview Farms LLC Livestock Facility Conditional Use Permit Application

Dear Town Board:

As you know, this firm represents Ledgeview Farms LLC. On February 5, 2018, Ledgeview Farms filed an application with the Town for a conditional use permit related to its planned livestock facility expansion. Pursuant to Town Ord. § 135-251 D., the Town Zoning and Planning Committee ("ZPC") has 60 days from the date of filing to review a CUP application and make a recommendation to the Town Board. To date, the ZPC has neither reviewed nor made a recommendation to the Town Board regarding Ledgeview Farms' CUP application and, thus, has failed to take the necessary action as required in Subsection D.

The sole purpose of this letter is to inform you of the foregoing failure on the part of the ZPC, which is purportedly the responsibility of Ledgeview Farms pursuant to Town Ord. § 135-251 F.(1). We provide this notice without waiving any and all other substantive and procedural objections, whether or not previously made, to the Town's failure to comply with the State Livestock Facility Siting Law and/or any other applicable legal requirement.

Sincerely,

Eric M. McLeod
Partner

cc: Vanessa Wishart, Esq. (via E-Mail)
Joseph S. Diedrich, Esq.

NOTICE TO ADJACENT PROPERTY OWNERS
LIVESTOCK FACILITY SITING

The Town of Ledgeview has received an application from Ledgeview Farms, LLC ("Applicant") to approve a new or expanded livestock facility located at 3499 Lime Kiln Road, Green Bay, WI 54311. The legal description is Parcel D-168, Sec. 28, T23N R21E and Parcel D-169, Sect. 28, T23N, R21E.

Wis. Stat. s. 93.90 and Wis. Admin. Code ch. ATCP 51 (the "state livestock siting law") provide a process to be followed by applicants seeking local approval of a new or expanded livestock facility, the steps to be taken by a municipality to review such an application and provide public notice and opportunity for public participation, and the timeline for a municipality to follow in making a decision whether to approve or deny the application.

The state livestock siting law functions as a limit on municipal authority with respect to livestock facility siting. Livestock facility siting permits for facilities of the size proposed by Ledgeview Farms, LLC, may generally be conditioned or denied by a local government for only two reasons. First, an application may be conditioned or denied if it is determined that the proposed operation will fail to meet state standards related to odor management, setbacks, manure management and storage facilities, and runoff management. Second, an application may be conditioned or denied based on local requirements that are more stringent than these state standards if certain conditions are met, including that the reasons for such requirements are reasonable and scientifically defensible and necessary to protect public health or safety.

Copies of the application form and related worksheets submitted by the Applicant are on file with the Town, and are open to public inspection. On April 20, 2018, the Town notified the Applicant that the application was complete. In their notification, the Town informed the Applicant its completeness determination does not constitute an approval of the application or constitute a determination that the application is approvable. Under state law, the Town must normally grant or deny the application within 90 days after that date; however, the Town anticipates rendering a decision on this application in early June due to shorter processing deadlines in the Town zoning ordinance.

Interested persons may submit comments and information, in writing, by May 22, 2018. The Town may also hold a public hearing on this matter. If the Town schedules a public hearing, it will publish a hearing notice in the normal manner. You may review the siting application, and submit written comments, at the following address:

Sarah Burdette, Administrator
Town of Ledgeview
3700 Dickinson Road
De Pere, WI 54115

After the Town issues a decision on this application, an appeal may be brought by an aggrieved party in a number of ways. In addition to standard appeal proceedings available under the law, the state livestock siting law allows an applicant or a person who resides or owns land within 2 miles of the proposed livestock facility to appeal the Town's decision to the Wisconsin Livestock Facility Siting Review Board. This type of an appeal must be filed within 30 days of issuance of the Town's decision on the application. The Siting Review Board will review the local decision based on state law, and evidence in the record of proceedings prepared by the Town. For more information on this application, you may call 920.336.3360, ext. 108 or email sburdette@ledgeviewwisconsin.com . For more information about the state livestock facility siting law, you may visit the Wisconsin Department of Agriculture, Trade and Consumer Protection website at http://livestocksiting.wi.gov/ .

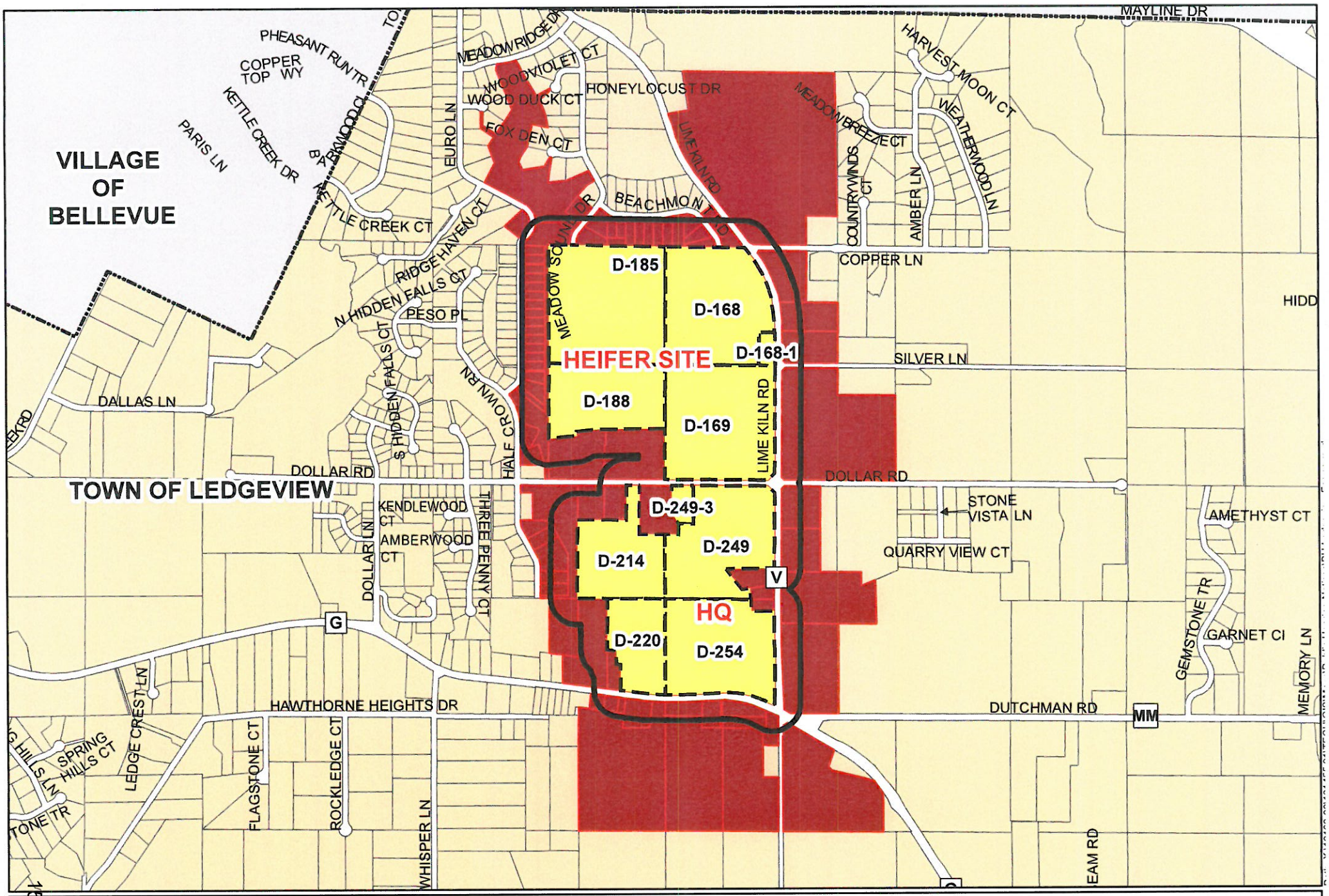

Ledgeview
Set your sights high

Parcels for Notification
Town of Ledgeview

300 Foot Buffer
Subject Parcels
Parcels Notified
Ledgeview Parcels

0 700 1,400 2,800 Feet

N

Mead & Hunt

1595

PARCELID	OWNMAIL1	OWNMAIL2	OWNMAIL3	OWNCITY	OWNSTATE	OWNZIP5
D-1341	CHRISTINE ALFT OTTO & JAMES M OTTO		3729 EURO LN	DE PERE	WI	54115
D-1342	SCOTT A & NANCY A BEHLING		3725 EURO LN	DE PERE	WI	54115
D-1343	TATUM SHAHIN		3723 EURO LN	DE PERE	WI	54115
D-1343	TATUM SHAHIN		3723 EURO LN	DE PERE	WI	54115
D-1344	JEFFREY & CAREY WICKMAN		3717 EURO LN	DE PERE	WI	54115
D-1345	JAY R & LINDSAY A ARNDT		3711 EURO LN	DE PERE	WI	54115
D-1346	MICHAEL C & JILL A PEARSON		3705 EURO LN	DE PERE	WI	54115
D-1347	BRIAN W & LYNN R BUNKELMAN		3699 EURO LN	DE PERE	WI	54115
D-1348	BRADLEY J & AMANDA A NYCZ		3693 EURO LN	DE PERE	WI	54115
D-1349	DAVID J & KRISTEN A JOHNSON		3687 EURO LN	DE PERE	WI	54115
D-1350	PAUL C HASSELER & DEBRA L WIJAS HASSELER		3681 EURO LN	DE PERE	WI	54115
D-1351	JASON M & KERRY A SIMONS		3675 EURO LN	DE PERE	WI	54115
D-1352	CRAIG M & HOLLY A STURDIVANT		3669 EURO LN	DE PERE	WI	54115
D-1353	STEVEN J & DANYEL M KRUEGER		3663 EURO LN	DE PERE	WI	54115
D-1354	TIMOTHY J & CARRIE A ROUSE		3657 EURO LN	DE PERE	WI	54115
D-1354	TIMOTHY J & CARRIE A ROUSE		3657 EURO LN	DE PERE	WI	54115
D-1355	GREG & JENNIFER L BOSETSKI		3651 EURO LN	DE PERE	WI	54115
D-1356	MARCUS A STEELE		3645 EURO LN	DE PERE	WI	54115
D-1384	TOWN OF LEDGEVIEW		3700 DICKINSON RD	DE PERE	WI	54115
D-1384	TOWN OF LEDGEVIEW		3700 DICKINSON RD	DE PERE	WI	54115
D-1385	TOWN OF LEDGEVIEW		3700 DICKINSON RD	DE PERE	WI	54115
D-1385	TOWN OF LEDGEVIEW		3700 DICKINSON RD	DE PERE	WI	54115
D-164	LIME KILN 70 LLC		3505 LIME KILN RD	GREEN BAY	WI	54311
D-166-1	SANDRA DOLLAR	C/O MRS GARY ARENDT	2354 YELLOWSTONE DR	GREEN BAY	WI	54311
D-166-3	MICHAEL & SUSAN TESAR		3505 LIME KILN RD	GREEN BAY	WI	54311
D-166-5	SANDRA W ARENDT		2354 YELLOWSTONE RD	GREEN BAY	WI	54311
D-168	ROY PANSIER		3870 DICKINSON RD	DE PERE	WI	54115
D-168-1	LEDGEVIEW FARMS LLC		3870 DICKENSON RD	DE PERE	WI	54115
D-169	ROY PANSIER		3870 DICKINSON RD	DE PERE	WI	54115
D-170	JUDITH E WESTPHAL		2297 TIGER CT	GREEN BAY	WI	54311
D-1843	RADUE HOMES INC		PO BOX 758	DENMARK	WI	54208
D-1844	RADUE HOMES INC		PO BOX 758	DENMARK	WI	54208
D-1845	RADUE HOMES INC		PO BOX 758	DENMARK	WI	54208
D-1846	RADUE HOMES INC		PO BOX 758	DENMARK	WI	54208
D-1847	JON ERIC SULLIVAN & JENNIFER HOENER SULLIVAN		3830 BEACHMONT RD	DE PERE	WI	54115
D-1848	RADUE HOMES INC		PO BOX 758	DENMARK	WI	54208
D-1849	RADUE HOMES INC		PO BOX 758	DENMARK	WI	54208
D-185	ROY PANSIER		3870 DICKINSON RD	DE PERE	WI	54115
D-1850	RADUE HOMES INC		PO BOX 758	DENMARK	WI	54208
D-1851	ABHISHEK KESHAV		1485 CRYSTAL LAKE CI #1	GREEN BAY	WI	54311
D-1852	NICHOLAS M KOLANKO		3668 BEACHMONT RD	DE PERE	WI	54115
D-1853	VINAY MEHTA		3646 BEACHMONT RD	DE PERE	WI	54115
D-1853	VINAY MEHTA		3646 BEACHMONT RD	DE PERE	WI	54115
D-1854	MEVLUET YILMAZ & CHARITY J SCHNEIDER		3626 BEACHMONT RD	DE PERE	WI	54115
D-1855	RAYMOND L & TAMRA R SCHNEIDER III		3606 BEACHMONT RD	DE PERE	WI	54115
D-1856	MICHAEL E & BROOKE M NEVILLE JR		3586 BEACHMONT RD	DE PERE	WI	54115
D-1857	MICHAEL E & BROOKE M NEVILLE JR		3566 BEACHMONT RD	DE PERE	WI	54115
D-1858	CITY OF DEPERE		335 S BROADWAY	DE PERE	WI	54115
D-188	ROY PANSIER		3870 DICKINSON RD	DE PERE	WI	54115
D-188-1	DAVID M & CATHERINE H AMES		2225 DOLLAR RD	DE PERE	WI	54115
D-188-2	JAMES J & JULIE K ENRIGHT		2277 DOLLAR RD	DE PERE	WI	54115
D-214	ROY PANSIER		3870 DICKINSON RD	DE PERE	WI	54115
D-214-1	LUCILLE C JOSSART		2226 DOLLAR RD	DE PERE	WI	54115
D-214-2	LUCILLE C JOSSART		2226 DOLLAR RD	DE PERE	WI	54115
D-214-3	JOHN P & KIM L CONNELLY		2276 DOLLAR RD	DE PERE	WI	54115
D-220	ROY PANSIER		3870 DICKINSON RD	DE PERE	WI	54115
D-220-1	ANDREW L & VICKY L TENOR		3851 DICKINSON RD	DE PERE	WI	54115
D-221	GRIZZLY BEAR VENTURES LLC		4824 INDUSTRIAL PARK RD	STEVENS POINT	WI	54481
D-221-1	JAMES H DOLLAR		831 ZURICH ST	DE PERE	WI	54115
D-222	ROY P & JOAN A PANSIER		3870 DICKINSON RD	DE PERE	WI	54115
D-222-1	CHRISTOPHER M & AMANDA L GILBERT		3860 DICKINSON RD	DE PERE	WI	54115
D-222-2	CHRISTOPHER M & AMANDA L GILBERT		3860 DICKINSON RD	DE PERE	WI	54115
D-237	ROY PANSIER		3870 DICKINSON RD	DE PERE	WI	54115
D-248-1	ALAN R CASE & RENE L VANCAMPENHOUT		2408 DOLLAR RD	GREEN BAY	WI	54311
D-248-3	MICHAEL MARTIN VAN STRATEN		4055 LIME KILN RD	GREEN BAY	WI	54311

1596

D-249	ROY PANSIER	3870 DICKINSON RD	DE PERE	WI	54115
D-249-1	THEODORE J & JESSICA R KLEMM	4104 LIME KILN RD	GREEN BAY	WI	54311
D-249-1	THEODORE J & JESSICA R KLEMM	4104 LIME KILN RD	GREEN BAY	WI	54311
D-249-2	WAYNE J & LINDA L BORLEY	2350 DOLLAR RD	DE PERE	WI	54115
D-249-2	WAYNE J & LINDA L BORLEY	2350 DOLLAR RD	DE PERE	WI	54115
D-249-3	GLEN J & JANE E PANSIER	2294 DOLLAR RD	DE PERE	WI	54115
D-250	THEODORE J & JESSICA R KLEMM	4104 LIME KILN RD	GREEN BAY	WI	54311
D-250	THEODORE J & JESSICA R KLEMM	4104 LIME KILN RD	GREEN BAY	WI	54311
D-251	JAMES M JADIN	4026 DICKINSON RD	DE PERE	WI	54115
D-253	ROY PANSIER	3870 DICKINSON RD	DE PERE	WI	54115
D-253	ROY PANSIER	3870 DICKINSON RD	DE PERE	WI	54115
D-253-1	COLE R KLOSTERMAN	3994 DICKINSON RD	DE PERE	WI	54115
D-254	ROY PANSIER	3870 DICKINSON RD	DE PERE	WI	54115
D-255	QUENTIN M & CAROL M FINUCAN	4105 LIME KILN RD	GREEN BAY	WI	54311
D-256	KATHERINE M KANE	4151 DICKINSON RD	GREEN BAY	WI	54311
D-257-2	STEVEN P & DONALD W CORRIGAN	4424 DICKINSON RD	DE PERE	WI	54115
D-257-2	STEVEN P & DONALD W CORRIGAN	4424 DICKINSON RD	DE PERE	WI	54115
D-258	JAMES M JADIN	4026 DICKINSON RD	DE PERE	WI	54115
D-259	DH PORTFOLIO LLC	205 DOTY ST STE 201	GREEN BAY	WI	54301
D-261	ROY PANSIER	3870 DICKINSON RD	DE PERE	WI	54115
D-262	ROY PANSIER	3870 DICKINSON RD	DE PERE	WI	54115
D-265	STEVEN P & DONALD W CORRIGAN	4602 DICKINSON RD	DE PERE	WI	54115
D-471	DANIEL J KERKHOFF	3848 DICKINSON RD	DE PERE	WI	54115
D-472	DANIEL J KERKHOFF & BETH A VANDERMEULEN	3848 DICKINSON RD	DE PERE	WI	54115
D-709	CURTIS & MONICA CZACHOR	3580 MEADOW SOUND DR	DE PERE	WI	54115
D-710	REVM REVOCABLE TRUST	3590 MEADOW SOUND DR	DE PERE	WI	54115
D-713	JOEL J & AMY R NEUVILLE	3600 EURO LN	DE PERE	WI	54115
D-745	MICHAEL & MARENDA AVERY	3585 MEADOW SOUND DR	DE PERE	WI	54115
D-746	TOWN OF LEDGEVIEW	3700 DICKINSON ROAD	DE PERE	WI	54115
D-746	TOWN OF LEDGEVIEW	3700 DICKINSON ROAD	DE PERE	WI	54115
D-752	TOWN OF LEDGEVIEW	3700 DICKINSON ROAD	DE PERE	WI	54115
D-752	TOWN OF LEDGEVIEW	3700 DICKINSON ROAD	DE PERE	WI	54115
D-797	PAUL & KRISTIN NORTHWAY	3975 HALF CROWN RN	DE PERE	WI	54115
D-798	DENIS J TILKENS & BETH M LEMKE	3987 HALF CROWN RN	DE PERE	WI	54115
D-801	RANDAL J & JEAN A KOLTZ	4033 HALF CROWN RN	DE PERE	WI	54115
D-802	RICHARD LARSCHEID	4045 HALF CROWN RN	DE PERE	WI	54115
D-803	DEAN A & KAREN A STOLLER	4061 HALF CROWN RN	DE PERE	WI	54115
D-805	STEVEN HINKER & BETH ANN ELLINGEN	4077 HALF CROWN RN	DE PERE	WI	54115
D-806	MICHAEL E & KIMBERLY D TERRY	4085 HALF CROWN RN	DE PERE	WI	54115
D-814	TOWN OF LEDGEVIEW	3700 DICKINSON ROAD	DE PERE	WI	54115
D-814	TOWN OF LEDGEVIEW	3700 DICKINSON ROAD	DE PERE	WI	54115
D-814	TOWN OF LEDGEVIEW	3700 DICKINSON ROAD	DE PERE	WI	54115
D-814	TOWN OF LEDGEVIEW	3700 DICKINSON ROAD	DE PERE	WI	54115

Subject Parcel

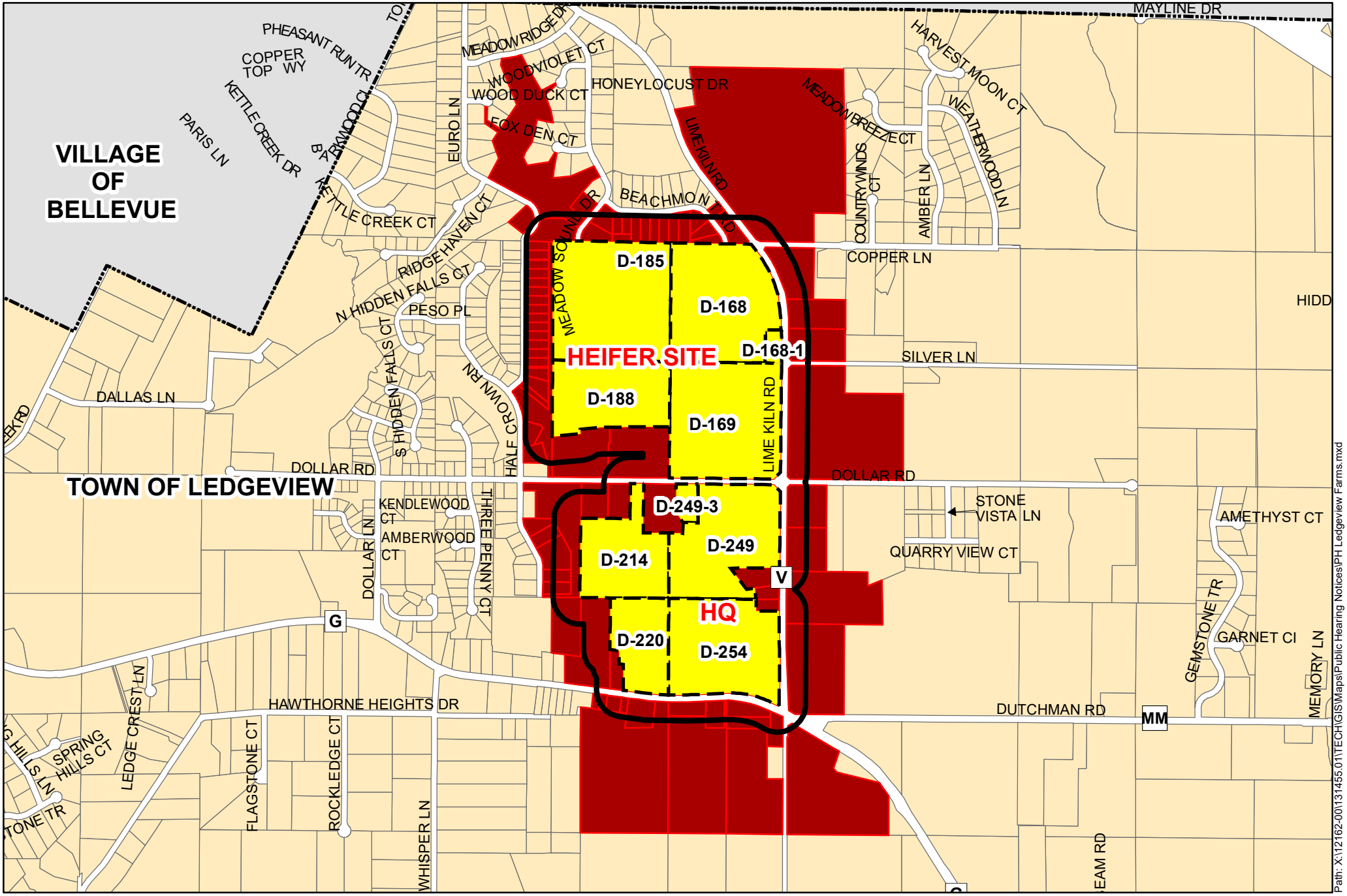

Ledgeview
Set your sights high

Parcels for Notification

Town of Ledgeview

300 Foot Buffer
Subject Parcels
Parcels Notified
Ledgeview Parcels

0 700 1,400 2,800 Feet

N

Mead & Hunt

PARCELID	OWNMAIL1
D-1341	CHRISTINE ALFT OTTO & JAMES M OTTO
D-1342	SCOTT A & NANCY A BEHLING
D-1343	TATUM SHAHIN
D-1343	TATUM SHAHIN
D-1344	JEFFREY & CAREY WICKMAN
D-1345	JAY R & LINDSAY A ARNDT
D-1346	MICHAEL C & JILL A PEARSON
D-1347	BRIAN W & LYNN R BUNKELMAN
D-1348	BRADLEY J & AMANDA A NYCZ
D-1349	DAVID J & KRISTEN A JOHNSON
D-1350	PAUL C HASSELER & DEBRA L WIJAS HASSELER
D-1351	JASON M & KERRY A SIMONS
D-1352	CRAIG M & HOLLY A STURDIVANT
D-1353	STEVEN J & DANYEL M KRUEGER
D-1354	TIMOTHY J & CARRIE A ROUSE
D-1354	TIMOTHY J & CARRIE A ROUSE
D-1355	GREG & JENNIFER L BOSETSKI
D-1356	MARCUS A STEELE
D-1384	TOWN OF LEDGEVIEW
D-1384	TOWN OF LEDGEVIEW
D-1385	TOWN OF LEDGEVIEW
D-1385	TOWN OF LEDGEVIEW
D-164	LIME KILN 70 LLC
D-166-1	SANDRA DOLLAR
D-166-3	MICHAEL & SUSAN TESAR
D-166-5	SANDRA W ARENDT
D-168	ROY PANSIER
D-168-1	LEDGEVIEW FARMS LLC
D-169	ROY PANSIER
D-170	JUDITH E WESTPHAL
D-1843	RADUE HOMES INC
D-1844	RADUE HOMES INC
D-1845	RADUE HOMES INC
D-1846	RADUE HOMES INC
D-1847	JON ERIC SULLIVAN & JENNIFER HOENER SULLIVAN
D-1848	RADUE HOMES INC
D-1849	RADUE HOMES INC
D-185	ROY PANSIER
D-1850	RADUE HOMES INC
D-1851	ABHISHEK KESHAV
D-1852	NICHOLAS M KOLANKO
D-1853	VINAY MEHTA
D-1853	VINAY MEHTA
D-1854	MEVLUET YILMAZ & CHARITY J SCHNEIDER
D-1855	RAYMOND L & TAMRA R SCHNEIDER III
D-1856	MICHAEL E & BROOKE M NEVILLE JR
D-1857	MICHAEL E & BROOKE M NEVILLE JR
D-1858	CITY OF DEPERE
D-188	ROY PANSIER
D-188-1	DAVID M & CATHERINE H AMES
D-188-2	JAMES J & JULIE K ENRIGHT
D-214	ROY PANSIER
D-214-1	LUCILLE C JOSSART
D-214-2	LUCILLE C JOSSART
D-214-3	JOHN P & KIM L CONNELLY
D-220	ROY PANSIER
D-220-1	ANDREW L & VICKY L TENOR
D-221	GRIZZLY BEAR VENTURES LLC
D-221-1	JAMES H DOLLAR
D-222	ROY P & JOAN A PANSIER

OWNMAIL2

C/O MRS GARY ARENDT

OWNMAIL3	OWNCITY	OWNSTATE	OWNZIP5
3729 EURO LN	DE PERE	WI	54115
3725 EURO LN	DE PERE	WI	54115
3723 EURO LN	DE PERE	WI	54115
3723 EURO LN	DE PERE	WI	54115
3717 EURO LN	DE PERE	WI	54115
3711 EURO LN	DE PERE	WI	54115
3705 EURO LN	DE PERE	WI	54115
3699 EURO LN	DE PERE	WI	54115
3693 EURO LN	DE PERE	WI	54115
3687 EURO LN	DE PERE	WI	54115
3681 EURO LN	DE PERE	WI	54115
3675 EURO LN	DE PERE	WI	54115
3669 EURO LN	DE PERE	WI	54115
3663 EURO LN	DE PERE	WI	54115
3657 EURO LN	DE PERE	WI	54115
3657 EURO LN	DE PERE	WI	54115
3651 EURO LN	DE PERE	WI	54115
3645 EURO LN	DE PERE	WI	54115
3700 DICKINSON RD	DE PERE	WI	54115
3700 DICKINSON RD	DE PERE	WI	54115
3700 DICKINSON RD	DE PERE	WI	54115
3700 DICKINSON RD	DE PERE	WI	54115
3505 LIME KILN RD	GREEN BAY	WI	54311
2354 YELLOWSTONE DR	GREEN BAY	WI	54311
3505 LIME KILN RD	GREEN BAY	WI	54311
2354 YELLOWSTONE RD	GREEN BAY	WI	54311
3870 DICKINSON RD	DE PERE	WI	54115
3870 DICKENSON RD	DE PERE	WI	54115
3870 DICKINSON RD	DE PERE	WI	54115
2297 TIGER CT	GREEN BAY	WI	54311
PO BOX 758	DENMARK	WI	54208
PO BOX 758	DENMARK	WI	54208
PO BOX 758	DENMARK	WI	54208
PO BOX 758	DENMARK	WI	54208
3830 BEACHMONT RD	DE PERE	WI	54115
PO BOX 758	DENMARK	WI	54208
PO BOX 758	DENMARK	WI	54208
3870 DICKINSON RD	DE PERE	WI	54115
PO BOX 758	DENMARK	WI	54208
1485 CRYSTAL LAKE CI #1	GREEN BAY	WI	54311
3668 BEACHMONT RD	DE PERE	WI	54115
3646 BEACHMONT RD	DE PERE	WI	54115
3646 BEACHMONT RD	DE PERE	WI	54115
3626 BEACHMONT RD	DE PERE	WI	54115
3606 BEACHMONT RD	DE PERE	WI	54115
3586 BEACHMONT RD	DE PERE	WI	54115
3566 BEACHMONT RD	DE PERE	WI	54115
335 S BROADWAY	DE PERE	WI	54115
3870 DICKINSON RD	DE PERE	WI	54115
2225 DOLLAR RD	DE PERE	WI	54115
2277 DOLLAR RD	DE PERE	WI	54115
3870 DICKINSON RD	DE PERE	WI	54115
2226 DOLLAR RD	DE PERE	WI	54115
2226 DOLLAR RD	DE PERE	WI	54115
2276 DOLLAR RD	DE PERE	WI	54115
3870 DICKINSON RD	DE PERE	WI	54115
3851 DICKINSON RD	DE PERE	WI	54115
4824 INDUSTRIAL PARK RD	STEVENS POINT	WI	54481
831 ZURICH ST	DE PERE	WI	54115
3870 DICKINSON RD	DE PERE	WI	54115

D-222-1	CHRISTOPHER M & AMANDA L GILBERT
D-222-2	CHRISTOPHER M & AMANDA L GILBERT
D-237	ROY PANSIER
D-248-1	ALAN R CASE & RENE L VANCAMPENHOUT
D-248-3	MICHAEL MARTIN VAN STRATEN
D-249	ROY PANSIER
D-249-1	THEODORE J & JESSICA R KLEMM
D-249-1	THEODORE J & JESSICA R KLEMM
D-249-2	WAYNE J & LINDA L BORLEY
D-249-2	WAYNE J & LINDA L BORLEY
D-249-3	GLEN J & JANE E PANSIER
D-250	THEODORE J & JESSICA R KLEMM
D-250	THEODORE J & JESSICA R KLEMM
D-251	JAMES M JADIN
D-253	ROY PANSIER
D-253	ROY PANSIER
D-253-1	COLE R KLOSTERMAN
D-254	ROY PANSIER
D-255	QUENTIN M & CAROL M FINUCAN
D-256	KATHERINE M KANE
D-257-2	STEVEN P & DONALD W CORRIGAN
D-257-2	STEVEN P & DONALD W CORRIGAN
D-258	JAMES M JADIN
D-259	DH PORTFOLIO LLC
D-261	ROY PANSIER
D-262	ROY PANSIER
D-265	STEVEN P & DONALD W CORRIGAN
D-471	DANIEL J KERKHOFF
D-472	DANIEL J KERKHOFF & BETH A VANDERMEULEN
D-709	CURTIS & MONICA CZACHOR
D-710	REVM REVOCABLE TRUST
D-713	JOEL J & AMY R NEUVILLE
D-745	MICHAEL & MARENDA AVERY
D-746	TOWN OF LEDGEVIEW
D-746	TOWN OF LEDGEVIEW
D-752	TOWN OF LEDGEVIEW
D-752	TOWN OF LEDGEVIEW
D-797	PAUL & KRISTIN NORTHWAY
D-798	DENIS J TILKENS & BETH M LEMKE
D-801	RANDAL J & JEAN A KOLTZ
D-802	RICHARD LARSCHEID
D-803	DEAN A & KAREN A STOLLER
D-805	STEVEN HINKER & BETH ANN ELLINGEN
D-806	MICHAEL E & KIMBERLY D TERRY
D-814	TOWN OF LEDGEVIEW
D-814	TOWN OF LEDGEVIEW
D-814	TOWN OF LEDGEVIEW
D-814	TOWN OF LEDGEVIEW

Subject Parcel

3860 DICKINSON RD	DE PERE	WI	54115
3860 DICKINSON RD	DE PERE	WI	54115
3870 DICKINSON RD	DE PERE	WI	54115
2408 DOLLAR RD	GREEN BAY	WI	54311
4055 LIME KILN RD	GREEN BAY	WI	54311
3870 DICKINSON RD	DE PERE	WI	54115
4104 LIME KILN RD	GREEN BAY	WI	54311
4104 LIME KILN RD	GREEN BAY	WI	54311
2350 DOLLAR RD	DE PERE	WI	54115
2350 DOLLAR RD	DE PERE	WI	54115
2294 DOLLAR RD	DE PERE	WI	54115
4104 LIME KILN RD	GREEN BAY	WI	54311
4104 LIME KILN RD	GREEN BAY	WI	54311
4026 DICKINSON RD	DE PERE	WI	54115
3870 DICKINSON RD	DE PERE	WI	54115
3870 DICKINSON RD	DE PERE	WI	54115
3994 DICKINSON RD	DE PERE	WI	54115
3870 DICKINSON RD	DE PERE	WI	54115
4105 LIME KILN RD	GREEN BAY	WI	54311
4151 DICKINSON RD	GREEN BAY	WI	54311
4424 DICKINSON RD	DE PERE	WI	54115
4424 DICKINSON RD	DE PERE	WI	54115
4026 DICKINSON RD	DE PERE	WI	54115
205 DOTY ST STE 201	GREEN BAY	WI	54301
3870 DICKINSON RD	DE PERE	WI	54115
3870 DICKINSON RD	DE PERE	WI	54115
4602 DICKINSON RD	DE PERE	WI	54115
3848 DICKINSON RD	DE PERE	WI	54115
3848 DICKINSON RD	DE PERE	WI	54115
3580 MEADOW SOUND DR	DE PERE	WI	54115
3590 MEADOW SOUND DR	DE PERE	WI	54115
3600 EURO LN	DE PERE	WI	54115
3585 MEADOW SOUND DR	DE PERE	WI	54115
3700 DICKINSON ROAD	DE PERE	WI	54115
3700 DICKINSON ROAD	DE PERE	WI	54115
3700 DICKINSON ROAD	DE PERE	WI	54115
3700 DICKINSON ROAD	DE PERE	WI	54115
3975 HALF CROWN RN	DE PERE	WI	54115
3987 HALF CROWN RN	DE PERE	WI	54115
4033 HALF CROWN RN	DE PERE	WI	54115
4045 HALF CROWN RN	DE PERE	WI	54115
4061 HALF CROWN RN	DE PERE	WI	54115
4077 HALF CROWN RN	DE PERE	WI	54115
4085 HALF CROWN RN	DE PERE	WI	54115
3700 DICKINSON ROAD	DE PERE	WI	54115
3700 DICKINSON ROAD	DE PERE	WI	54115
3700 DICKINSON ROAD	DE PERE	WI	54115
3700 DICKINSON ROAD	DE PERE	WI	54115

AFFIDAVIT OF POSTING

STATE OF WISCONSIN)
Town of Ledgeview)
Brown County)

I, Charlotte K. Nagel, Town Clerk of the Town of Ledgeview, Brown County, Wisconsin, attest and affirm all of the following:

1. That the following action was posted pursuant to s. 60.80, Wis. stats:
The Ledgeview Zoning & Planning Commission Meeting scheduled for Wednesday, May 18, 2018 at 6:00 p.m., a copy here onto attached;

2. That the above-noted action was posted as required in the following 3 places in the Town of Ledgeview, Brown County, Wisconsin:

Ledgeview Town Hall, 3700 Dickinson Road, De Pere, WI 54115

Piggly Wiggly, 575 Swan Road, De Pere, WI 54115

I-43 Shell Station, 3285 Cedar Hedge Lane, Green Bay, WI 54311

Town of Ledgeview website at www.ledgeviewwisconsin.com

3. That the posting of this action occurred at the following times and dates:

Prior to 5:00 p.m. on Friday, May 11, 2018.

That I filed this affidavit in the records of the town clerk for the Town of Ledgeview on May 14, 2018.

Dated this 14th day of May, 2018.

Charlotte Nagel
Charlotte Nagel, Town Clerk
Town of Ledgeview, Brown County, WI

Subscribed and sworn to before me this 14th day of May, 2018.

Sarah K. Burdette
Town Administrator
Town of Ledgeview, Brown County, WI

Ledgeview
Set your sights high

NOTICE OF MEETING
TOWN OF LEDGEVIEW
ZONING & PLANNING COMMISSION
Wednesday, May 16, 2018 at 6:00 p.m.
Ledgeview Municipal Building
3700 Dickinson Road
De Pere, WI 54115

The Zoning & Planning Commission may discuss and act on the following agenda:

1. Call meeting to order.
2. Roll call.
3. Approve/amend agenda.
4. Public Hearings: None
5. New Business:
   a. Receive a presentation from the applicant on the proposed project for which a request has been made by Jason Pansier and Ledgeview Farms, LLC, for a conditional use permit and livestock facility siting approval related to construction at 3499 Lime Kiln Road and operations at 3875 Dickinson Road, and discussion related to these applications.
6. Old Business: None
7. Staff Report.
   a. Update on future agenda items.
8. Communications by Commission members.
9. Adjourn.

Charlotte Nagel
Charlotte K. Nagel, Clerk, Town of Ledgeview
Signed, Dated and Posted: May 11, 2018

Where citizens provide input to the Town of Ledgeview Zoning and Planning Commission on items not specifically listed within this agenda, the only appropriate action is referral to a Commission or to a subsequent Ledgeview Town Board meeting. Any person wishing to attend who, because of disability, requires special accommodations should contact the Ledgeview Town Clerk at (920) 336-3360, 3700 Dickinson Road, at least 48 hours prior to the meeting so arrangements can be made.

Charlotte Nagel

From: Charlotte Nagel <cnagel@ledgeviewwisconsin.com>
Sent: Friday, May 11, 2018 4:30 PM
To: 'metro@greenbaypressgazette.com'; 'Anderson, Jonathan'
Subject: Ledgeview Zoning & Planning Agenda
Attachments: 18-05-16 ZPC Agenda.pdf

Greetings,

Attached is Ledgeview's Zoning & Planning Agenda for Wednesday, May 16, 2018 at 6:00 p.m.

Sincerely,

Charlotte Nagel, Clerk

Town of Ledgeview
3700 Dickinson Road
De Pere, WI 54115
Telephone: (920) 336-3360, Ext. 104
Fax: (920) 336-8517
cnagel@ledgeviewwisconsin.com
Population: 7,431

This message originates from the Town of Ledgeview. It contains information that may be confidential or privileged and is intended only for the individual named above. It is prohibited for anyone to disclose, copy, distribute or use the contents of this message without permission, except as allowed by the Wisconsin Public Records Laws. If this message is sent to a quorum of a governmental body, my intent is the same as though it were sent by regular mail and further distribution is prohibited. All personal messages express views soley of the sender, which are not attributed to the municipality I represent, and may not be copied or distributed without this disclaimer. If you receive this message in error, please notify me immediately.

NOTICE OF MEETING
TOWN OF LEDGEVIEW
ZONING & PLANNING COMMISSION
Wednesday, May 16, 2018 at 6:00 p.m.
Ledgeview Municipal Building
3700 Dickinson Road
De Pere, WI 54115

The Zoning & Planning Commission may discuss and act on the following agenda:

1. Call meeting to order.
2. Roll call.
3. Approve/amend agenda.
4. Public Hearings: None
5. New Business:
   a. Receive a presentation from the applicant on the proposed project for which a request has been made by Jason Pansier and Ledgeview Farms, LLC, for a conditional use permit and livestock facility siting approval related to construction at 3499 Lime Kiln Road and operations at 3875 Dickinson Road, and discussion related to these applications.
6. Old Business: None
7. Staff Report.
   a. Update on future agenda items.
8. Communications by Commission members.
9. Adjourn.

Charlotte Nagel
Charlotte K. Nagel, Clerk, Town of Ledgeview
Signed, Dated and Posted: May 11, 2018

Where citizens provide input to the Town of Ledgeview Zoning and Planning Commission on items not specifically listed within this agenda, the only appropriate action is referral to a Commission or to a subsequent Ledgeview Town Board meeting. Any person wishing to attend who, because of disability, requires special accommodations should contact the Ledgeview Town Clerk at (920) 336-3360, 3700 Dickinson Road, at least 48 hours prior to the meeting so arrangements can be made.

Ledgeview
Set your sights high

Zoning and Planning Commission

Meeting Comment Card

Name: MIKE TESAR

Date: 05-16-18

Address: 3505 LIME KILN LA
GREEN BAY, WI.

Regarding: LEDGEVIEW FARMS APPLICATION.

Do you wish to speak to the Commission? YES X NO ____

Zoning and Planning Commission Rules of Public Interaction

The Chairperson may invoke a requirement to use Appearance Slips when the Chairperson finds it necessary, to systematically and more accurately receive citizen comments on matters before the Commission. Also, when citizens speak to the Commission, they must await suspension of the Operating Rules by the Commission to enable them to speak, confine their remarks to the matter under discussion and must avoid personality references. No citizen may speak more than once on the matter under discussion and may not exceed three minutes at a time, unless the time is extended by the Chairperson. Written statements are welcome and will be distributed to Commission Members. Parliamentary procedure limits Commission interaction to hearing public comments; Commission discussion during public comments is prohibited under procedural guidelines.

Ledgeview
Set your sights high

Zoning and Planning Commission

Meeting Comment Card

Name: Al Chesloak

Date: 5/16/18

Address: 3565 Beachmont Rd.

Regarding: ____

Do you wish to speak to the Commission? YES X NO ____

Zoning and Planning Commission Rules of Public Interaction

The Chairperson may invoke a requirement to use Appearance Slips when the Chairperson finds it necessary, to systematically and more accurately receive citizen comments on matters before the Commission. Also, when citizens speak to the Commission, they must await suspension of the Operating Rules by the Commission to enable them to speak, confine their remarks to the matter under discussion and must avoid personality references. No citizen may speak more than once on the matter under discussion and may not exceed three minutes at a time, unless the time is extended by the Chairperson. Written statements are welcome and will be distributed to Commission Members. Parliamentary procedure limits Commission interaction to hearing public comments; Commission discussion during public comments is prohibited under procedural guidelines.

Ledgeview
Set your sights high

Zoning and Planning Commission

Meeting Comment Card

Name: Cristy Janitch

Date: 5/16/18

Address: 2264 Fox Den Ct

Regarding: odor

Do you wish to speak to the Commission? YES X NO ____

Zoning and Planning Commission Rules of Public Interaction

The Chairperson may invoke a requirement to use Appearance Slips when the Chairperson finds it necessary, to systematically and more accurately receive citizen comments on matters before the Commission. Also, when citizens speak to the Commission, they must await suspension of the Operating Rules by the Commission to enable them to speak, confine their remarks to the matter under discussion and must avoid personality references. No citizen may speak more than once on the matter under discussion and may not exceed three minutes at a time, unless the time is extended by the Chairperson. Written statements are welcome and will be distributed to Commission Members. Parliamentary procedure limits Commission interaction to hearing public comments; Commission discussion during public comments is prohibited under procedural guidelines.

Ledgeview
Set your sights high

Zoning and Planning Commission

Meeting Comment Card

Name: PAT SCHILLINGER

Date: 5/16/18

Address: 714 IRON HORSE WAY
GB, WI 54311

Regarding: LEDGEVIEW FARMS PERMIT

Do you wish to speak to the Commission? YES ✓ NO ____

Zoning and Planning Commission Rules of Public Interaction

The Chairperson may invoke a requirement to use Appearance Slips when the Chairperson finds it necessary, to systematically and more accurately receive citizen comments on matters before the Commission. Also, when citizens speak to the Commission, they must await suspension of the Operating Rules by the Commission to enable them to speak, confine their remarks to the matter under discussion and must avoid personality references. No citizen may speak more than once on the matter under discussion and may not exceed three minutes at a time, unless the time is extended by the Chairperson. Written statements are welcome and will be distributed to Commission Members. Parliamentary procedure limits Commission interaction to hearing public comments; Commission discussion during public comments is prohibited under procedural guidelines.

The Ledgeview Zoning & Planning Commission held a m.eeting on **Wednesday, May 16, 2018 at 6:00 p.m.** at the Municipal Building located at 3700 Dickinson Road, De Pere, WI 54115.

1. **CALL TO ORDER**
   The meeting was called to order by Chairwoman Jane Tenor at 6:00 PM.

2. **ROLL CALL**
   Members present were Chairwoman Tenor, Vice-Chair Mark Handeland, Commissioners Lamers, Chambers, Van Rossum, Garcia, and Baran.

   Staff present were Planner Dustin Wolff, Town Administrator Sarah Burdette, and Clerk Charlotte Nagel.

3. **APPROVE/AMEND AGENDA**
   MOTION by Van Rossum/Chambers to approve the agenda as written. No further discussion. Motion carried in a voice vote, 7-0.

4. **PUBLIC HEARINGS:** None.

5. **NEW BUSINESS:**
   a. **Receive a presentation from the applicant on the proposed project for which a request has been made by Jason Pansier and Ledgeview Farms, LLC, for a conditional use permit and livestock facility siting approval related to construction at 3499 Lime Kiln Road and operations at 3875 Dickinson Road, and discussion related to these applications.**
   John Roach from Roach & Associates, engineering firm for Jason Pansier, gave a brief overview of the layout of Ledgeview Farms and physical layout of the proposed ponds and how they would function.

   Mr. Roach explained that the livestock facility siting would follow Ledgeview Farm's WPDES permit restrictions, meaning the manure pit would be designed to meet the standards of a 25-year weather event. The pit will be gravity fed through two pipes and will hold up to 290 days of waste storage. A nutrient management plan would be in place to recycling the waste back onto the fields. Mr. Roach indicated that there is very detailed recordkeeping required for the nutrient management plan which is on file with the county, Department of Natural Resources, and DATCAP (Department of Agriculture, Trade, and Consumer Protection) which is subject to open records laws. The pit is also subject to a four-year annual maintenance testing. Mr. Roach indicated that Ledgeview Farms has been approved for a 5 million storage facility at the main farm. The farm is working on the best placement of that pond to allow for the best and most use of it.

   There was discussion amongst The Commission to open the meeting up for public input. The Commission felt the public had a right to be heard.

   MOTION by Tenor/Handeland to suspend the rules and open the meeting for public comment. No further discussion. Motion carried in a voice vote, 7-0.

   Chairwoman Tenor laid out the rules for public comment. Each person would be required to fill out a comment card and hand it to the clerk. The Clerk would call their names in order they cards were received. Each person would be allowed three minutes to speak so everyone would be heard. The Commission asked for no repeated comments; if there was something new to add, to please share it.

Chairwoman Tenor also informed the Commission that Joan Pansier asked that letters of support for Ledgeveiw Farms be shared with The Commission which was in tonight's packet.

Pat Schillinger, 714 Iron Horse Way – Mr. Schillinger moved into the Beachmont area ten years ago when the farm was a family farm, not a CAFO with 3,500 cow and a multi-million-gallon storage tank. The farm is currently a major farm and pubic safety has to be looked at for a farm that size. A farm of this caliber is meant to be in large rural areas, not next to subdivisions. Hazardous gases from manure decomposition will be released which puts people at health risks. Mr. Schilinger named off statistics from deaths caused by these gases from research that he did. Some of those deaths are from Wisconsin.

Cristy Janitch 2264 Fox Den Court – Is concerned with warmer months and having the air conditioning suck the order into her home. Ms. Janitch indicated that her family has woken up at night by the odor emitting from the farm now and in the past when the manure is spread on the fields behind her home. There is no way to safely escape the odor during the day or at night. What is the farm going to do to minimize the odor?

Al Cheslock, 3565 Beachmont Road – Stated that the permit is about 9 years to late; that Ledgeview Farms have been expanding the farm without the proper permits in place for years now. Had the farm obtained the proper permits, the subdivision would have been alerted to the farm's expansion intentions. The permit is too late and overdue. There is no fairness or equality in this case. Mr. Cheslock asked The Committee to deny the application.

Mike Tesar, 3505 Lime Kiln Road – Is concerned for public safety because of the lack of an emergency alarm notification system. There is no alarm system on the pit to notify a responsible person when there's a problem or a potential problem. There is no responsible person monitoring the system 24/7. Mr. Tesar is an engineer and indicated that typically pits of this caliber are built to 100-year flood standards. The location of the pond is concerning. It's 300 feet from the nearest home. Should the pit run over the banks, who's responsibility is it to clean it up and the assurance no groundwater contamination is happening. There are multiple public safety health concerns.

Tim Kuehn. 3965 Three Penny Court – This is a scope creep on part of Ledgeview Farms. Instead of increasing the facilities to accommodate the herd they expanded the herd and now need to increase the operations in order to accommodate the herd. Had this been done in proper order, there would have been notification to the surrounding neighborhood. Property values will decrease because of the location of the manure pit.

After three calls for additional public comment, none was heard. MOTION by Tenor/Van Rossum to close the meeting for public comment. No further discussion. Motion carried in a voice vote, 7-0.

The Commission questioned Mr. Roach on odor and odor control. Mr. Roach referred to DATCP Administrative Code Chapter 51 for rules regarding odor. According to Chapter 51, the odor must be at least 500. If less than 500 there isn't a problem, but more than 500 there is.

The Commission questioned the non-compliance issue and who is liable for non-compliance of permits. Mr. Roach explained that there were many checks and balances with the permits, particularly with the Wisconsin Pollutant Discharge Elimination System Permit (WPDES). There is mandatory daily reporting with the DNR and the county which are considered public record and are subject to open records laws. There are annual DNR on-site inspections. If there are violations, there this a process for bringing the farm into compliance. Failure to bring the farm into compliance results in the Department of Justice issuing fines to the farm.

A brief history of the growth of the farm over the past decade was given. The farm's animal unit grew internally and without proper permitting. Today, the farm is faced with coming into compliance via a Concentrated Animal Feed Operations (CAFO) directed by the Environmental Protection Agency and WDNR because of the internal animal unit growth over the past decade.

The Commission questioned the disposal of the manure waste on the fields. Mr. Roach advised that the waste would be piped into the fields because transporting the waste to other occupied farmland further out of town is cost prohibitive to the farming operation.

The detention basin design was talked about. Mr. Roach advised the detention basin is designed to hold 180 days of bovine waste and would have an agitator at that bottom to stir the waste to allow for proper breakdown of solids. The waste would then be piped into the fields as crop fertilizer. The detention basin is designed to industry specifications and regulations of NR212 and NRCS313 which calls for design for a 25-year weather event.

There was discussion on rain water and runoff water detention. There are concerns about a lack of monitoring for emergency spill or weather-related emergency, i.e. 100-year storm. Mr. Roach reiterated that the basin is built to industry standards which is 24 hour holding for a 25-year weather event. The basin is also subject to weekly monitoring by a certified basin operator. Commissioners questioned to validity of the industry standards, for as designers of stormwater detention basins themselves. Stormwater detention basin standard is a 100-year weather event.

Chairwoman Tenor advised that Zoning & Planning would not be making a recommendation, and thanked those who commented as well as those who submitted comments. The comments would be forwarded to the Town Board. Tenor also advised that the public hearing for this issue will be held on Tuesday, May 29th at 5:30 PM with the Town Board.

6. **OLD BUSINESS:** None.

7. **Staff report.**
   a. **Update on future agenda items.**
      - Look for some future plats that have been submitted
      - Ordinance review and updates as time allows

   b. **Review town board decisions.** None.

8. **Communications by Commission Members.**
   - Lamers inquired about possible training opportunities for Brown County Caine Units at Ledgeview Nursing Home.
   - Requested a list of Commissioners contact information.

9. **ADJOURN.**
   MOTION by Van Rossum/Chambers to adjourn. No further discussion. Motion carried in a voice vote, 7-0. Meeting adjourned at 7:12 PM.

   Respectfully submitted,
   Charlotte K. Nagel, Clerk
   Town of Ledgeview, Brown County, WI

Approved at the June 13, 2018 Zoning & Planning Commission Meeting.
Approved at the June 19, 2018 Town Board Meeting.

Ledgeview
Set your sights high

TOWN OF LEDGEVIEW
SIGN-UP SHEET

Zoning & Planning Commission
Wednesday, May 16, 2018 at 6:00 PM

PRINT NAME	SIGNATURE	ADDRESS
PATRICK SCHILLINGER		714 IRON HORSE WAY
Zach Schillinger		714 Iron Horse Way
MIKE TESAR		3505 LIME KILN RD
ANTHONY LAVOUSKE		729 IRON HORSE WAY GB WI 54311

Ledgeview
Set your sights high

TOWN OF LEDGEVIEW
SIGN-UP SHEET

Zoning & Planning Commission
Wednesday, May 16, 2018 at 6:00 PM

PRINT NAME	SIGNATURE	ADDRESS
Kevin P. Kane	K. P. Kane	~~2638~~ 4151 Dickinson Rd.
Holly Schlarg	Holly Sch	2038 Wayside Pl. GB. WI
Cristy Janitch	Cristy Janitch	2264 Fox Den Ct
Susan Tesar	Susan Tesar	3505 Lime Kiln Rd, G.B. WI

Ledgeview
Set your sights high

TOWN OF LEDGEVIEW
SIGN-UP SHEET

Zoning & Planning Commission
Wednesday, May 16, 2018 at 6:00 PM

PRINT NAME	SIGNATURE	ADDRESS
Kristin Mehta	Kristin Mehta	3646 Beachmont Rd DePere, 54115
Courtney Rouch		Rouch and associates
Patrick Rouch		Rouch and associates
John Rouch		Rouch and associates
Bill Swidetowski		3517 Meadow Sound Drive
Tricia Adams	Tricia Adams	611 Marble Rock Cir
Jason Pansier		
Alan Cheslock		3565 Beachmont
Walt Ratschan		1636 Hidden Falls Ct.

Search

TOWN OF GREEN BAY

INTRODUCTION

Welcome to the Town of Green Bay web site. The town is located in Brown County Wisconsin, just northeast of the city of Green Bay. The final estimate of January 1, 2017 reported a population of 2,096 for the Town of Green Bay. The population is split roughly in half between agricultural and residential communities. The residential areas are primarily along the bay of Green Bay. The town is bounded by the bay of Green Bay on the north, County Road T on the west, and County Line Road on the east. To the south, the town extends a few blocks south of State Highway 54 to the town of Humboldt.

LOCAL NEWS

Meetings of the town board are regularly held on the second Tuesday of the month at 7:00 pm at the town hall in Champion located at 5999 County Rd K, New Franken.

Annual Dog License Fees are as follows: Neutered and Spayed -$10.00 Non-Neutered and Non-Spayed - $15.00 Multiple Dog/Kennel (which consists of 4-12 dogs) - $45.00 Please contact Treasurer Lori Geniesse regarding Dog License Fees.

The Town of Green Bay permits operation of properly conducted agricultural operations within the township. If the property you are purchasing or own is located near agricultural lands or operations, or is included within an area zoned for agricultural purposes, you may be subject to inconveniences or discomfort arising from such operations. Such discomfort or inconveniences may include, but are not limited to: noises, odors, light, fumes, dust, smoke, insects, chemicals, operation of machinery (including aircraft) during any 24 hour period, storage and disposal of manure, and the application by spraying or otherwise of chemical fertilizers, soil amendments, herbicides and pesticides. One or more of the inconveniences described may occur as a result of any agricultural operation, which is in conformance with existing laws and regulations, and accepted customs and standards. If you live near an agricultural area, you should be prepared to accept inconveniences or discomfort as a normal and necessary aspect of living in a town with a strong rural character and an active agricultural sector.

May 16, 2018

Town of Ledgeview Planning and Zoning
Town of Ledgeview Town Board
Town of Ledgeview Town Staff
Planner, Mead & Hunt, Dustin Wolff

Enclosed are some of the businesses Ledgeview Farms does business with that has heard of the actions Town of Ledgeview are producing against another business that effects all businesses future and economy of very near communities, counties, and State of Wisconsin.

Please, be sure all members above have the opportunity to read each and understand the effects one farm has on others in the community as they must purchase daily to supply necessary nutrition to people that is regulated by the State of Wisconsin. These daily purchases consist of milk hauler and plant, feed mills, repair machinist , tire implement, fuel companies, manufacturing machines, steel and wood companies, veterinarians and supplies companies, towel company, concrete companies, banks, nutritionist, nutrient management, well drillers, cattle buyers, hoof trimmer, bolt and parts companies, milking equipment repair and supplies, sand companies, artificial insemination, accountant, electric companies and repair, seed companies. The biggest businesses Town of Ledgeview has is BelGioioso Cheese and Wel Companies, they are using milk and delivering products.

Please thank these businesses and a farmer that does hard work to keep us healthy.

Brown County Farm Bureau

PO Box 5550 •Madison, WI 53705 •888-644-8359 Fax: 608-828-5718 •www.wfbf.com

December 7, 2017

Dear Town of Ledgeview,

On behalf of the Brown County Farm Bureau (BCFB), we are contacting you about the recent farmland preservation zoning ordinance the Town of Ledgeview adopted. The BCFB is supportive of local land use planning and zoning. Further, the BCFB appreciates the fact that the Town of Ledgeview has areas within the township zoned for agriculture.

It is our understanding that the recent zoning ordinance update included setback provisions for livestock structures and manure storage facilities. Specifically, for farms with less than 1000 animal units, the livestock structures must be at least 400 feet from the property line. For farms with 1000 to 2500 animal units, livestock structures must be at least 700 feet from the property line. For farm with 2500 to 4000 animal units, livestock structures must be at least 1000 feet from the property line. For farms with more than 4000 animal units, livestock structures must be at least 1200 from the property line. Lastly, new or expanded manure storage facilities on farms with more than 500 animal units, must be at least 1320 feet from the property line.

These setbacks appear to be in conflict with Wisconsin Administrative Code ATCP 51 – Livestock Facility Siting. ATCP 51.12 contains the following setback distances for livestock structures. For farm with less than 1000 animal units, livestock structures setbacks cannot be greater than 100 feet from the property line or public road right-of-way. For farms with more than 1000 animal units, livestock structure setbacks cannot be greater than 200 feet from the property line or more than 150 feet from the public road right-of-way.

ATCP 51.12 also contains setback distance for manure storage facilities. The setback distance is 350 feet from the property line or public road right-of-way for all manure storage facilities regardless of the number of animal units. It should be noted that ATCP 51.12 contains three provisions that allow manure storage facilities to be constructed closer to the property line or public road right-of-way under certain circumstances.

The Brown County Farm Bureau respectfully requests that the Town of Ledgeview consult with your Legal Counsel about the discrepancies between the setback distances for livestock structures and manure storage facilities in your zoning ordinance compared to those in ATCP 51. After doing so, please reply to us as to how these differences are going to be resolved.

We look forward to your response.

Sincerely,

Stan Kaczmarek

President BCFB

Town of Ledgeview
C/O Charlotte Nelson
3700 Dickinson Road
DePere WI 54115

RECEIVED JAN 3 2016

To the Board and Staff,

As a concerned citizen, I`m writing in regards to Ledgeview Farms that needs a permit for a manure pit. This farm had many expansions projects in the past (millions of dollars) and they always followed procedures set forth by the Ledgeview Town Broad. You have granted permits in the past for each time that they applied. With their business growth, it`s inconceivable to me that you didn`t realize that with more cattle, there would be more waste. Keep in mind that the manure pit will be built to State and Local specifications. I would recommend that you the Township do landscaping so it blends into the surrounding landscape (planting grass, trees, etc.). It is also my understanding that there are state programs in which you could apply for. The residents in the area could also do landscaping by planting Tree lines on their property.

Agriculture is very important to our area but also to the State of Wisconsin. The Ledgeview Farms has a high tax base for your Township. They have many employees who also pay taxes and spend their money in the community. Again, everyone benefits from dairy farm in the State of Wisconsin.

In closing, they were at their present location first. The residential community built out to them, they all knew about the Ledgeview Farms when they applied for their building permits.

I`m asking you to allow the Ledgeview Farms to follow NRCS Wisconsin laws and operate as an agriculture business, as they have been doing since before the depression to present.

Regards,

Jerry Zimdars
ABS Sales Representative

1-15-2018

To: Charlotte Nelson,

I am sending this letter in support of the Pansier family in regard to their request that has been brought before the Town of Ledgeview Board. I have known the family for more than (30) thirty years.

Pansiers' contribute millions of dollars every year to your local economy. This farm and this family was located at its' present site, long before the surrounding houses were built. I hope you take into consideration the importance of agriculture and where your food supply comes from.

Thank you for your consideration.

Paul D. Olson
Paul D. Olson
National President of the

National Farmers Organization

CLOVER AUTO & TRUCK SUPPLY

2681 N. Packerland Dr.
Green Bay, WI 54305
920-498-6372

1663 Main St.
Green Bay, WI 54302
920-405-6920

956 N. Main St.
Seymour, WI 54165
920-833-6272

January 16, 2018

Mr. Philip J. Danen
Chairman
1316 Angels Path #81
De Pere, WI 54115

Dear Mr. Danen,

Our company has three locations in the Northeast Wisconsin area and we employ 35 people who all live and support their families in our community. Our company is primarily engaged in business to business commerce and our success is tied directly to the success of the industries we serve. Auto repair, heavy truck repair, local government, collision repair, construction and agriculture are among the industries we serve.

I am specifically writing to you today about the importance of the agricultural industry to our company. We work closely with dozens of agricultural customers across the region including many within the Town of Ledgeview. The agricultural segment has been a long-time contributor to our success as a company and has been a critical component of our growth in recent years.

I am aware that you have received proposals for the expansion of Ledgeview Farms. Ledgeview Farms has been in operation since the 1930's and has contributed to the prosperity of the Town of Ledgeview and companies like ours for many years. I encourage you to support the requested expansion of Ledgeview Farms, so our entire community can continue to grow!

I can be reached at 920-784-2862 if you would like to discuss the importance of agriculture to our company.

Sincerely,

John O'Connor, Owner

GENEX

Part of **Cooperative Resources International**

PHILIP J. DANEN
TOWN OF LEDGEVIEW CHAIRMAN
1316 ANGELS PATH #81
DE PERE WI 54115

January 17, 2018

Dear Chairman Danen:

My name is Huub te Plate and I am the Chief Operating Officer at GENEX, located in Shawano, Wisconsin. I am writing about our support of Ledgeview Dairy, LLC. This farm, owned by the Pansier family, is a long-standing customer of our cooperative and a very good example of today's dairy farmer.

Today's dairy farmers are hard-working men and women who take pride in providing the highest quality dairy products to their family, community, and customers. They are members of their communities and they stay involved with community projects. They care deeply about the environment and strive to farm in ways that reduce any impact on the environment.

Dairies like Ledgeview Dairy, LLC., are the backbone of GENEX and we are very appreciative of their support of agriculture.

If you have questions or concerns, feel free to give me a call.

Sincerely,

Huub te Plate
Chief Operating Officer
GENEX

PO Box 469, Shawano, WI 54166-0469
Phone: 715-526-2141 | info@crinet.com | www.crinet.com

317 Green Bay Road
Sturgeon Bay, WI 54235
(920) 743-6555
Fax (920) 743-6743
www.doorcountycoop.com

Established Since 1939

January 18, 2018

Town of Ledgeview Board of Supervisors
Ledgeview Municipal Building
3700 Dickinson Road
DePere, Wisconsin 54115

Dear Ledgeview Town Supervisors:

We would like to express our support for the proposed manure storage facility project at Ledgeview Farms, LLC, which is owned and operated by the Pansier family in the Town of Ledgeview. We believe that the Pansier family has demonstrated a high level of responsible stewardship regarding the land they farm, thereby earning the right to continue to grow and develop their business without undue restrictions (i.e. increased setbacks, etc.).

Ledgeview Farms, LLC and the Pansier family have played a key role in the local economy for decades. They prioritize using local vendors, which in turn supports a variety of other businesses and individuals in our local and surrounding communities. For example, their support and patronage of our Shirley Feed Mill has allowed, and will continue to allow us to provide up to twenty (20) full time jobs.

Today's modern dairy farms must continuously adapt to evolving market demands and economic pressures, in addition to the economies of scale which dictate that remaining farms must maximize their investments in order to remain profitable. The proposed manure storage facility project will have negligible impact towards the voiced concerns of people in opposition to the project. It will, however, provide the efficiencies needed to allow this local business to remain a key part of our local economic engine for decades to come.

Sincerely,

Brian Duquaine
President/CEO
Door County Cooperative- Shirley Feed Mill

Fox Valley Farm Management Association
Michael Harer
3962 N Richmond St
Appleton, WI 54913
920-993-1366 phone
920-882-1104 fax
920-858-4138 cell phone
mharer@gmail.com

Jan 22nd, 2018

Re: Ledgeview Farms

I'm writing this letter for Ledgeview Farms to support their right to farm. Ledgeview Farms is so important to the local town, local community and businesses within 20-30 miles of their operation. They have employees, the contract services for nutrition, herd health, crop services, trucking, fuel, equipment, and seed to name a few. I'm asking that you allow Ledgeview Farms to follow NRCS rules to operate an agricultural business as they have done so since before the depression to present. We all benefit from allowing Ledgeview Farms to continue to produce Milk, Wheat, Corn and Meat for the community at a reasonable price.

Thank You for caring about Ledgeview Farms and your health with the delicious food all farms produce.

Michael Harer
Fox Valley Farm Management

DE PERE VETERINARY SERVICE, S.C.
2021 County Rd. PP
De Pere, Wisconsin 54115
Phone 920-336-7233
Email: cows2021@newbc.rr.com

K.R. Foust, D.V.M.
E.G. Brandt, D.V.M.

L.K. Edwards, D.V.M.
J.A. Bridges, D.V.M.

RECEIVED JAN 24 2018

January 23, 2018

Phillip J. Danen, Chairman
316 Angels Path #81
DePere, WI 54115
54115pjdanen@ledgeviewwisconsin.com

Andy Schlag, Supervisor
2247 Scray Hill Rd
DePere, WI 54115
54115aschlag@ledgeviewwisconsin.com

Renee Van Rossum, Supervisor
845 Lone Oak St.
DePere, WI 54115
54115vanrossum@ledgeviewwisconsin.com

Ken Geurts, Supervisor
1962 Old Valley Ct
DePere, WI 54115
54115kgeurts@ledgeviewwisconsin.com

Cullen Peltier, Supervisor
1959 Prescott Place
DePere, WI 54115
54115cpeltier@ledgeviewwisconsin.com

Town of Ledgeview, All Board and Staff
C/O Charlotte Nelson
3700 Dickinson Rd.
DePere, WI 54115

To whom it may concern,

We at DePere Veterinary Service, S.C. support the Pansier family farm known as Ledgeview Farms LLC. Farms like Ledgeview Farms, LLC are part of Wisconsin's heritage and economy. As large animal veterinarians we are just one of many businesses dependent on farms like Ledgeview Farms for our business. According to the Wisconsin Department of Agriculture and Consumer Protection :

Wisconsin is home to about 8,800 dairy farms, more than any other state, and 1.28 million cows.

- The dairy industry itself contributes $43.4 billion to Wisconsin's economy each year.
- The dairy industry fuels the state's economy at more than $82,500 per minute.
- The feed mills, dairy equipment manufacturers and technicians, veterinarians, construction companies, genetics companies, milk haulers, dairy plants, dairy software companies - create a wave of economic impact that rolls across the entire state

Wisconsin agriculture provides jobs.

- Annually, 413,500 jobs or 11.9% of the state's employment.
- On-farm production contributes 153,900 jobs.
- Processing contributes 259,600 jobs.
- Every job in agriculture supports an additional 1.46 jobs elsewhere in Wisconsin

Wisconsin is #1 in cheese production.

- Our state's nearly 1,200 licensed cheesemakers produce over 600 types, styles and varieties of cheese – nearly double the number of any other state.
- Wisconsin cheesemakers make a quarter of the nation's cheese, producing 3.2 billion pounds in 2016.
- Wisconsin leads the nation in the production of 774 million pounds of specialty cheeses, including but not limited to asiago, gorgonzola, gruyere, aged cheddar, gouda, and limburger.

Agriculture is so important to the state of Wisconsin that the state has a statute which is commonly referred to as the "Right to Farm Law". According to the Wisconsin Legislative Council:

The statute commonly referred to as Wisconsin's "Right-to-Farm Law" is s. 823.08, Stats. This statute directs the courts, under specific conditions set forth in the statute, to favor agriculture in certain legal disputes over agricultural uses of land. This statute was created in the 1981 Legislative Session and was substantially revised in the 1995 session.

The Wisconsin Legislative Council also states that farms have certain rights because they were in operation before adjoining lands were developed;

One of the defenses available in private nuisance law is known as the "coming to the nuisance" defense. In a lawsuit involving an agricultural activity, this defense is available when the plaintiff moved into the area after the farming operation was established. This defense is not an automatic bar to recovery by the plaintiff, but is rather one more factor for the court to consider.

We at DePere Veterinary Service, S.C. hope that you will consider these points before taking any action that would have a negative impact on Ledgeview Farms, LLC, the local job force and the local economy.

Thank You,

Dr. Kenneth R. Foust DVM

Dr. Edith G. Brandt DVM

Dr. Loriann M. Kaster Edwards DVM

Dr. Jessie Allie Bridges DVM

1/25/18

Dear Mr. Danen,

My name is Jack Vande Hey President of Wrightstown Mfg Co in Wrightstown Wis. I would appreciate a favorable decision by Your board for the Pansier Family Farm (Ledge View Farms) expansion projects. I have done business with them for 20 plus years and have become to know them as very responsible and respectful people of not only the environment but there neighbors as well.

Thank You for Your consideration,

Jack Vande Hey

Jack Vande Hey,

Wrightstown Mfg. Co. Inc., Pres.

RECEIVED JAN 2 8 2018

Untitled

to whom it may concerned

from rueden ag services llc.

I have been dealing with the Pansier family for a long time that is just running a family farm.Do to the dnr and epa they are just following the rules so they can keep farming in a safe way in regards to manure storage.If you do not want them on your tax roles anymore in your township ask them what they want for all there properties and buy them out! The worst they can say is no or who knows, they might surprise you?

thank you

Jeff Rueden
990-378-3161

Rueden Ag Services

Charlotte Nelson

From: Rick Kerkhoff <drivejohndeere@gmail.com>
Sent: Sunday, January 28, 2018 11:35 AM
To: pjdanen@ledgeviewwisconsin.com; aschlag@ledgeviewwisconsin.com; rvanrossum@ledgeviewwisconsin.com; kgeurts@ledgeviewwisconsin.com; cpeltier@ledgeviewwisconsin.com; cnelson@ledgeviewwisconsin.com
Subject: To the Town Board of Ledgeview...

To the Town Board of Ledgeview:

I am in support of allowing the Pansier Farm to expand. As a community we need to recognize the importance of family farms and support them in their business endeavors.

Many people will say they support local family farms because they have a nostalgic remembrance of years gone by. Did you know ninety-nine percent of U.S. farms are still family farms? If you say you support family farms, but slam farms over a certain size, you're hypocritical. You cannot only support a certain farm production practice or size. Family farms come in all shapes and sizes, but they're still family farms, and they account for 90 percent of the country's farm production

The Pansier farm has been a family business for many years. As a business they must ask themselves… how can a farm support the next generation or growing families if it stays the same size? The answer: It can't.

The location of the Pansier farm has been in place for decades. All farms face the struggle of the development of land and how it impacts their operation. We must all be respectful neighbors, which includes respecting another way of life different than our own. It also means being respectful of another person's dreams even when they are different than your own.

In today's economy, all farmers need the support of their local communities, and in-turn the local community need farmers. Studies have shown that locally owned farms have a multiplier effect: for every dollar the farm spends, a percentage remains in the local economy, contributing to the economic health of the community.

Farmers invest in their operations… they purchase goods and services from local businesses that are both agriculture related and non-agriculture related.

I have known the Pansiers' personally for many years. They are hardworking and want to maintain the only lifestyle they know. They have been involved with the volunteer fire department for Ledgeview and when the call comes in they drop what they are doing to go help someone in need. The world can use more good people like the Pansiers.

We are asking the Town Board of Ledgeview to create laws that protect and foster the potential of our family farms. The success of our local community depends on it.

Regards,

RECEIVED JAN 29 2018

CP Feeds

Committed to Our Customers' Success

16322 W. Washington Street
Valders, WI 54245
Phone: 920-775-9600

January 24, 2018

Philip J. Danen, Chairman
Ledgeview Town Board
3700 Dickinson Road
De Pere, WI 54115

Dear Ledgeview Town Board,

We are writing to support agriculture in Ledgeview. With recent changes enacted by the Ledgeview Town Board, Ledgeview Farms is prevented from continuing to protect the environment while still operating their family owned business.

Agriculture is paramount to Wisconsin, its businesses, and its people. According to the Wisconsin Milk Marketing Board (WMMB), the Wisconsin Dairy Industry contributes $43.4 billion to the state economy annually. Wisconsin has 9,520 licensed dairy farms and 1,279,000 dairy cows according to the WMMB. This vital industry produces food and provides jobs in the immediate community. According to data collected in 2014 by the UW Extension, agriculture provided jobs for 17,045 Brown County residents. The agricultural industry drove $4.6 billion in economic activity in Brown County and contributed $1.3 billion to the county's total income. Lastly, agriculture paid $80.8 million in taxes in 2014, not counting all property taxes paid to local schools. Thank you for your consideration of working with an important industry in your community.

Sincerely,

James Downey
Randy Marx
Dennis Schueller

James Downey, Randy Marx, and Dennis Schueller
Dairy Nutritionists
CP Feeds LLC
16322 West Washington Street
Valders, WI 54245

RECEIVED FEB 0 2 2018

VanDrisse Insurance Agency, Inc
Gary VanDrisse
P.O. Box 100
Luxemburg WI 54217
920-845-2367

January 30, 2018

Town of Ledgeview, All Board and Staff C/O Charlotte Nelson
3700 Dickinson Road
De Pere, WI 54115

Re: Jason, Roy and Glen Pansier,
3870 Dickinson Road
De Pere WI 54115

Greetings,
I am contacting you to voice my concern about the dilemma the Pansier family is currently facing. Being the third generation in my family business, VanDrisse Insurance Agency, I always enjoy doing business with other people who are multi-generation operations. Jason Pansier is now the fourth generation at Ledgeview farms. The longevity of this operation proves a solid work ethic and a standard in business that has survived from generation to generation. The Pansiers have been loyal clients of VanDrisse Insurance for 40 years. They strive to do business locally and therefore positively impact the community where they reside. My small business relies on people like the Pansiers.

I understand that water quality is of utmost importance and therefore the DNR is requiring a manure pit to be put in. I am confident that the manure pit will be compliant with all DNR regulations. Thus, please allow the Pansiers to comply with the DNR and move forward with the manure pit so they can continue to operate their farm and help people like myself. Your willingness to let me express my concerns is greatly appreciated.

Thank You,

Gary VanDrisse Gary VanDrisse

RECEIVED FEB 01 2018

AgSource™
Part of **Cooperative Resources International**

TOWN OF LEDGEVIEW BOARD & STAFF
C/O CHARLOTTE NELSON
3700 DICKINSON ROAD
DE PERE WI 54115

January 30, 2018

Dear Ms. Nelson:

My name is Pat Baier and I am the Chief Operating Officer at AgSource Cooperative Services, located Verona, Wisconsin. I am writing about our support of Ledgeview Dairy, LLC. This farm, owned by the Pansier family, is a long-standing customer of our services and a very good example of today's dairy farmer.

Today's dairy farmers are hard-working men and women who take pride in providing the highest quality dairy products to their family, community, and customers. They are members of their communities and they stay involved with community projects. They care deeply about the environment and strive to farm in ways that reduce any impact on the environment.

Dairies like Ledgeview Dairy, LLC., are the backbone of AgSource Cooperative and we are very appreciative of their support of agriculture.

If you have questions or concerns, feel free to give me a call.

Sincerely,

Patrick Baier
Chief Operating Officer
AgSource Cooperative Services

135 Enterprise Drive, PO Box 930230, Verona, WI 53593
P: 608.845.1900 • info@agsource.com

© 2017 AgSource Cooperative Services. All rights reserved. FRM-16204-17

VAN STRATEN SAND & GRAVEL INC.

PO Box 163
DePere, WI 54115
February 1, 2018

Philip J. Danen
1316 Angel Path #81
DePere, WI 54115

Chairman

We have deep concerns about your decision with Ledgeview Farm
3870 Dickinson Road
DePere, WI 54115

Since the DNR and Brown County gave Ledgeview Farm permits for their manure pit. It is difficult to understand your board's plan of action. We realize you have several homes in the area near the farm, but maybe these home owners need to understand or at least have researched their decision before they built.

We are very fortunate to have Ledgeview Farm as a customer their farm generates a large part of our business income. By not leaving the farm grow you will be hurting not only Ledgeview Farm, but many other business that supply the farm with products.

We hope you understand our concerns and consider all aspect of the problems that need to be dissolved.

Sincerely,

Don Van Straten

Don Van Straten

To Whom It May Concern,

Why do you want Dairy Farms in your community? Dairy Producers provide a great infusion of money to the community in which they live, purchase and hire services from the community. Many Dairy Farms are family run businesses that take great pride in producing a healthy and nutritious product for the world.

A dairy farmer gets a milk check and then they pay bills, for the products or services used or hired in the month or months pervious.

Lets start in January, **Taxes** are due that money goes back to help run the state, county, town, local schools, and collage(s). Next there are day to day expenses, **Milk Hauler** they take the milk to the **Processing Facilities** to be bottled or made into other consumable products. **Electricity** to harvest the milk, to run equipment like silos, conveyors, lights the list goes on. The **Internet & Phones** which allows the farmer to communicate the outside world.

Lets go to Spring many farmers grow the feed to feed the cattle. If they do not own enough land to provide feed for their herd they rent land from neighboring **Landlords**. They have to have **Equipment** to run the land, more often than not they will buy from the local equipment dealerships. So that if ever repairs are needed that they are close by and can fix the implements quicker, or buying parts to repair the item them self, it is closer. Next **Fuel** is needed to run the Equipment to prepare, plant and harvest the crops for the livestock. More and more Farmers are hiring **Agronomists** to help them decide what crops to plant in what fields given the soil types and topography. **Fertilizer** is applied at recommended rates to maximize the production of the land and care for the soil for generations to come. A **Seed Dealer** is needed to obtain the seed needed to plant the crops, this might include alfalfa, corn, soybeans, wheat, just to name a few. After the growing season now comes harvest, sometimes farmers hire **Custom Operators** to chop the haylage or corn silage, or a combine to combine the wheat or corn. Now that all of the feed is in we have to utilize it to the best or our abilities, so many farmers hire a **Nutritionist** to balance rations to optimize performance in both the reproduction and production of the dairy cows. By providing a balanced diet to the cow she can absorb many nutrients and doesn't excrete them into the manure, and what the nutrients that are left in the manure is used by the growing crop for food. Many farmers hire an **Artificial Inseminator** from a **Semen Company** to breed the cattle, so they can calve and begin to produce milk. About 35 days after being bred A **Veterinarian** comes to the farm and performs a pregnancy exam to see if the animal is Pregnant. After a long nine month wait if we're lucky a beautiful calf is born, and so starts the cycle of life. If we get a heifer calf she will grow into a cow to producing offspring and milk for the country. Out of the milk that is produced we get so many products that we as humans have come to enjoy: Milk, Ice Cream, Cheese, Yogurt, Cottage Cheese, Sour Cream, Whey and Milk Powder to name a few. If the cow has a bull calf, he will be raised and enjoy his time on earth until he becomes the steak and meat to feed the human body.

Lastly most people including Dairy Farmers use **Banks** or **Credit Unions** to momentarily hold the milk check till they can infuse the money back into the community.

In Closing Dairy Farmers are working or "On Call" 24 hours a day 365 days a year and Farming is not only a job for them, but a way of life to raise their families and to care for the Land for the Future Generations and to Feed the WORLD. As the World's population continues to increase we will need more food and farmers not Less. So please take the time to remember how the food is produced and all the hands it touches before you get to eat every day. Reducing dairy farmers in our community not only has an emotional impact but a monetary impact as well.

Scenic Central Milk Producers

Thank You For Your Time

Jon Meilke

DENMARK (WLUK) -- Fifty new jobs are coming to Brown County.

BelGioioso Cheese made the announcement Wednesday.

Sponsored by ZINC

"We source milk from local Wisconsin farmers to ensure the freshest highest quality possible. We work with local architects and construction companies to create these beautiful and efficient manufacturing facilities," said Gaetano Auricchio, vice president of sales for BelGioioso Cheese, Inc.

The new 100,000 square foot manufacturing facility will produce mozzarella cheese.

"We look forward to making a lot of fresh mozzarella for Walmart out of this new facility," Gaetano Auricchio said.

The cheese can be found in stores nationwide. The company also talked about being a part of Walmart's 10-year commitment to buy an additional $250 billion in products supporting American jobs by 2023.

The company started in 1979 with two cheesemakers producing mild provolone.

"We had the dream of creating a cheese company in the United States it was a challenge. We had been in [the] cheese business in Italy for 100 years. My company was started in 1879 and I came in 1979," said Errico Auricchio,BelGioioso's founder.

The company now has nine plants and employs more than 700 people.

"I never thought it would become this big. In 1984 we introduced the fresh mozzarella and then it's been a big growth," Errico Auricchio said.

To learn more about the company or apply for a job, click here.

HUSCH BLACKWELL

Eric M. McLeod
Partner

33 E. Main Street, Suite 300, P.O. Box 1379
Madison, WI 53701-1379
Direct: 608.234.6056
Fax: 608.258.7138
Eric.McLeod@huschblackwell.com

May 25, 2018

VIA U.S. MAIL & E-MAIL

Town of Ledgeview Board of Supervisors
c/o Sarah Burdette
Town of Ledgeview Clerk
3700 Dickinson Road
De Pere, WI 54115
sburdette@ledgeviewwisconsin.com

Re: Ledgeview Farms, LLC – Pending Livestock Facility Siting Application before the Town

Dear Town Board:

Our firm represents Ledgeview Farms, LLC, a dairy farm located at 3875 Dickinson Road in the Town of Ledgeview (the "Town"). Several months ago, Ledgeview Farms submitted a Livestock Facility Siting Application to the Town (the "Application"). Among other things, Ledgeview Farms seeks a conditional use permit to construct and utilize a manure storage facility on its property. We understand the Town Board intends to make a decision on the Application at its meeting on Tuesday, May 29, 2018.

As of the date that Ledgeview Farms submitted its application, the Town's zoning code included the following requirements for new manure storage facilities:

- A minimum setback of at least 1,320 feet from any property line, §§ 135-85(D), 135-226(B)(2); and
- A performance bond before construction, § 135-232.

Under state law, these provisions are void and unenforceable.

Wisconsin's Livestock Facility Siting Law ("Sitting Law") establishes a statewide regulatory framework governing livestock facility siting. Wis. Stat. § 93.90. Under § 93.90, local governments can enact ordinances relating to livestock facility siting, but those ordinances must be consistent with state law. Inconsistent local regulations are preempted. *Adams v. State*

Livestock Facilities Siting Review Bd., 2012 WI 85, ¶¶ 40–52, 342 Wis. 2d 444, 820 N.W.2d 404.

Sections of the Wisconsin Administrative Code implement the Siting Law. *See* Wis. Admin. Code ch. ATCP 51. Among other things, chapter ATCP 51 lists permissible conditions for issuing conditional use permits. If a political subdivision wants to adopt a more stringent condition than those provided in chapter ATCP 51, it must: (1) adopt the requirement by ordinance before an applicant files the application for approval, and (2) base the requirement on reasonable and scientifically defensible findings of fact that clearly show that the requirement is necessary to protect public health or safety. Wis. Stat. § 93.90(3)(ar); Wis. Admin. Code § ATCP 51.10(3); *Adams*, 2012 WI 85, ¶¶ 54–59.

Section ATCP 51.12(1)–(2) provides a setback requirement for waste storage facilities of 350 feet. Chapter ATCP 51, moreover, does not list performance bonds as a permissible condition of granting a conditional use permit. Thus, unless it completes the process outlined above, a political subdivision may not adopt either (1) a setback requirement greater than 350 feet, or (2) a performance-bond requirement.[1] The Town has adopted both without completing the required process.

<u>The Town did not properly adopt the requirements before Ledgeview Farms submitted its application.</u>

Before August 2017, the Town's manure storage facility requirements were not more stringent than state law. In August 2017, however, the Town adopted Ordinance No. 2017-08, which included two requirements more stringent than state law: sections 135-85(D)[2] and 135-22(B)(2) established a setback requirement of 1,320 feet, and section 135-232 required a performance-bond requirement.

Because these requirements are more stringent than state law, the Town was required to base them on reasonable and scientifically defensible findings of fact that clearly showed that they are necessary to protect public health or safety. As of August 2017, however, the Town had not based the requirements on any such findings. Nothing in Ordinance No. 2017-08 or in the materials the Town provided to Ledgeview Farms in response to Ledgeview Farms' December 4, 2017 public records request indicates that the Town had made the required factual findings.

---

[1] In fact, a performance-bond requirement is illegal under the Siting Law regardless of the process followed to adopt it. Section ATCP 51.10(3) permits local governments to apply more-stringent standards "that are more stringent than the standards in this subchapter . . . ." Nothing in ch. ATCP 51 refers to performance bonds. Thus, a performance-bond requirement—a means of enforcement—is not available to any local government, no matter what process the local government follows to adopt it.

[2] Section 135-85(D) is also inconsistent with other provisions of the Town's agricultural zoning ordinances: section 135-79(C), for example, expressly incorporates section 93.90 and chapter ACTP 51 "as if . . . [they] were set forth in their entirety."

In addition, Wis. Stat. § 92.16 allows local governments to enact ordinances requiring that manure storage facilities meet "technical" requirements. Because a setback requirement is not a technical one, the Town cannot rely on § 92.16 to defend Ordinance No. 2017-08.

Because the setback and performance-bond requirements were adopted without a proper basis under state law, those requirements were void *ab initio*. "Void," *Black's Law Dictionary* (10th ed. 2014). They were not merely unenforceable until a proper basis was later established. They never achieved the status of law in the first instance.

Then, in November 2017, the Town adopted Ordinance No. 2017-13, which included a new section (135-79(D)) purporting to establish the required factual findings. Regardless of whether these findings adequately support the setback and performance-bond requirements (but they do not, see discussion below), they were adopted at a time when the requirements did not exist. For more-stringent requirements to be valid, a local government must adopt adequate factual findings either *before* or *at the same time as* it adopts the requirements; it cannot adopt the factual findings *after* the requirements. Because the setback and performance-bond requirements set forth in Ordinance No. 2017-08 were void *ab initio*, the Town's after-the-fact factual findings could not and did not revive the previously void requirements. When Ledgeview Farms submitted its application, then, only the factual findings were in place—not the corresponding requirements. Thus, the Town had not adopted the requirements by ordinance before the application was filed, as required under Wis. Stat. § 93.90(3)(ar).

The Town did not base the requirements on reasonable and scientifically defensible findings of fact that clearly show that the requirement is necessary to protect public health or safety.

As described, section 135-79(D) of Ordinance No. 2017-13 purports to set forth factual findings designed to adequately support the Town's setback and performance-bond requirements; that is, those requirements are supposedly based on "reasonable and scientifically defensible findings of fact that clearly show that the requirement[s] [are] necessary to protect public health or safety." Wis. Stat. § 93.90(3)(ar). These after-the-fact findings fail to satisfy the requirements in the Sitting Law.

For its proffered factual findings, Ordinance No. 2017-13 incorporates by reference eight third-party sources:

1. The Report of the Livestock Facility Siting Technical Expert Committee Recommendations, dated December 21, 2010;

2. A two-year study by the Wisconsin Department of Agriculture, Trade and Consumer Protection and the Wisconsin Department of Natural Resources entitled "Final Report On Wisconsin's Dairy And Livestock Odor And Air Emission Project," dated September 2009;

3. An article in the July 1, 2001 Appraisal Journal, pages 301 — 306, titled, "Concentrated Animal Feeding Operations and Proximate Property Values" by John A. Kilpatrick;

4. A University of Minnesota Extension publication written by Larry Jacobson, David Schmidt, and Susan Wood, "Offset Odor From Feedlots Setback Estimation Tool;"

5. A Purdue University project, presented by the Purdue Agricultural Air Quality Laboratory, "Odor Based Setbacks;"

6. A research article by Susan S. Schiffman, Clare E. Studwell, Lawrence R. Landerman, Katherine Berman, and John S. Sundy, "Symptomatic Effects of Exposure to Diluted Air Sampled from a Swine Confinement Atmosphere on Healthy Human Subjects," Volume 113, Number 5, Environmental Health Perspectives, pages 567-576, (2005);

7. A research mini-monograph by Kelley J. Donham, Steven Wing, David Osterberg, Jan L. Flora, Carol Hodne, Kendall M. Thu, and Peter S. Thorne, "Community Health and Socioeconomic Issues Surrounding Concentrated Animal Feeding Operations," Volume 115, Number 2, Environmental Health Perspectives, pages 317-320 (2007); and

8. A study by Steven J. Taff, Douglas Tiffany, and Sanford Weisberg, "Measured Effects of Feedlots on Residential Property Values in Minnesota: A Report to the Legislature," University of Minnesota Staff Paper Series (July, 1996).

For multiple reasons, these factual findings—and thus, the requirements at issue—fail to meet the requisite standard.

First, and most problematically, neither the findings nor the proffered support for those findings relate to local conditions in the Town suggesting that more stringent standards are needed. Instead, they are all *generally applicable* conclusions about the proximity of manure storage facilities. None of the findings are based on data, facts, or other evidence from or about the Town. Only two of the eight findings, it would appear, even rely on data, facts, or evidence from or about Wisconsin.

This lack of any locale-specific findings contravenes the fundamental purpose of the Siting Law. By establishing statewide standards and preempting local authority, the Siting Law fulfills its purpose of "providing uniform regulation of livestock facilities." Wis. Stat. § 93.90(1); *Adams*, 2012 WI 85, ¶¶ 37–50. The only exception is when a political subdivision can meet the high burden of § 93.90(3)(ar) to adopt more stringent local standards. *See Adams*, 2012 WI 85, ¶¶ 49, 54. That section necessarily requires factual findings that are specific to the locale. In the absence of locale-specific findings, the adoption of more stringent local standards would enable political subdivisions to effectively amend the Siting Law.

Second, the factual findings largely do not relate to public health or safety, which is required for the adoption of more stringent local standards. Findings no. 3 and 8 (the Kilpatrick and Taff papers, respectively) focus instead on the economic value of property. The Taff paper, in fact, directly contradicts the Town's increased setback requirement, concluding that "nearby feedlots positively influence property values . . . ." (*see* p. 27 of finding no. 8).

Third, the remaining factual findings do not *clearly* show that the setback or performance-bond requirements are *necessary*. To begin, all of the non-economic factual

findings—nos. 1–2 and 4–7—were copied verbatim from Town of West Kewaunee Ordinance No. 2013-1, suggesting that the Town performed little or no independent research.

Further, some of the findings clearly do not provide support for the Town's increased setback or performance-bond requirements. The purpose of finding no. 2 was to compare different odor control technologies, including impermeable covers, permeable covers, and digesters (*see* pp. 1–5 of finding no. 2), not to evaluate the effects of proximity to a manure storage facility. Findings no. 4 and 5 are models that calculate odor effects based on inputs provided by a user; they do not support any particular setback. Finding no. 6 relates only to odor from swine manure. At best, this finding would support a greater setback for *swine* facilities, not livestock facilities generally.

In the end, the Town adopted its more stringent setback and performance-bond requirements (sections 135-85(D), 135-22(B)(2), and 135-232 of the zoning code) in violation of the Siting Law. These local requirements are therefore void and unenforceable. Any attempt to enforce them against an applicant for a conditional use permit—including Ledgeview Farms—would be rendered a nullity by the Livestock Facility Siting Review Board, another administrative agency, or a court of law. We thus demand the Town not to consider those provisions when reviewing Ledgeview Farms' pending application. If, however, the Town does enforce the invalid provisions of its zoning code, then we are prepared to defend Ledgeview Farms' rights to the fullest extent.

Sincerely,

Eric M. McLeod
Partner