United States Department of Agriculture

Animal and Plant Health Inspection Service

Plant Protection and Quarantine

Gypsy Moth Program Manual

Some processes, equipment, and materials described in this manual may be patented. Inclusion in this manual does not constitute permission for use from the patent owner. The use of any patented invention in the performance of the processes described in this manual is solely the responsibility of the user. APHIS does not indemnify the user against liability for patent infringement and will not be liable to the user or to any third party for patent infringement.

The U.S. Department of Agriculture (USDA) prohibits discrimination in all its programs and activities on the basis of race, color, national origin, age, disability, and where applicable, sex, marital status, familial status, parental status, religion, sexual orientation, genetic information, political beliefs, reprisal, or because all or part of an individual's income is derived from any public assistance program. (Not all prohibited bases apply to all programs.) Persons with disabilities who require alternative means for communication of program information (Braille, large print, audiotape, etc.) should contact USDA's TARGET Center at (202) 720-2600 (voice and TDD). To file a complaint of discrimination, write to USDA, Director, Office of Civil Rights, 1400 Independence Avenue, S.W., Washington, D.C. 20250-9410, or call (800) 795-3272 (voice) or (202) 720-6382 (TDD). USDA is an equal opportunity provider and employer.

When using pesticides, read and follow all label instructions.

First Edition Issued 2010

Gypsy Moth Manual

Contents

Figures *LOF-1*

Tables *LOT-1*

Acknowledgments *Acknowledgments-1*

Introduction *1-1*

Detection Survey *2-1*

Delimiting Survey *3-1*

Other Survey Tools *4-1*

Preparing Specimens for Identification *5-1*

Regulatory Section Introduction *6-1*

Treatments *7-1*

Hazardous Sites *8-1*

Logs, Posts, Pulpwood, Bark, and Bark Products *9-1*

Nursery Stock *10-1*

Christmas Trees from Canada *11-1*

Qualified Certified Applicators (QCAs) *12-1*

Outdoor Household Articles (OHAs) *13-1*

Mobile Homes and Associated Items *14-1*

Control Section Introduction *15-1*

Safety Precautions *16-1*

Planning for Control Activities ***17-1***

Eradication Using Insecticides ***18-1***

Eradication Using Mass Trapping ***19-1***

Transition Area Section Introduction ***20-1***

Transition Area Definitions ***21-1***

Survey Activities ***22-1***

Transition Area Regulatory Activities ***23-1***

Criteria for Transfer of Areas ***24-1***

Asian Gypsy Moth ***25-1***

Appendix A ***A-1***
Leaflets and Other Materials on the Gypsy Moth *A-1*

Appendix B ***B-1***
Map of Generally Infested Areas *B-1*

Appendix C ***C-1***
How to Assemble Traps *C-1*

Appendix D ***D-1***
GM Data Collection *D-1*

Appendix E ***E-1***
Compliance Agreements (CAs) *E-1*

Appendix F ***F-1***
Insecticide Labels and MSDSs *F-1*

Appendix G ***G-1***
Methods for Gypsy Moth Eradication *G-1*

Appendix H ***H-1***
Guidelines for Environmental Documents *H-1*

Appendix I ***I-1***
Public Meetings/Public Relations *I-1*

Appendix J ***J-1***
Checking and Calibrating Aircraft *J-1*

Appendix K ***K-1***
Nozzles and Pressures *K-1*

Appendix L ***L-1***
Procedures for Composting Bark *L-1*

Appendix M ***M-1***
Accurate Statement *M-1*

Appendix N ***N-1***
Certificate of Origin *N-1*

Appendix O ***O-1***
Checklist for Outdoor Household Articles (OHAs) *O-1*

Appendix P ***P-1***
Qualified Certified Applicator (QCA) Document *P-1*

Appendix Q ***Q-1***
Emergency Action Notification (EAN) PPQ Form 523 *Q-1*

Glossary ***Glossary-1***

Index ***Index-1***

Gypsy Moth Manual

Figures

Figure 2-1 Example of Traps Plotted for Detection Survey *2-9*
Figure 3-1 Example of Traps Plotted for Delimiting Survey *3-3*
Figure 4-1 Example of a Larval Trap on a Host Tree *4-7*
Figure 5-1 ARS-748 (Identification Request) *5-3*
Figure 5-2 PPQ Form 391 (Specimens for Determination) *5-4*
Figure C-1 Example of Step 2 for Assembling Delta Traps *C-2*
Figure C-2 Example of Step 3 for Assembling Delta Traps *C-3*
Figure C-3 Example of Step 4 for Assembling Delta Traps *C-3*
Figure C-4 Example of Step 5 for Assembling Delta Traps *C-4*
Figure C-5 Example of Step 6 for Assembling Delta Traps *C-4*
Figure C-6 Example of Step 2 for Assembling Milk Carton Traps *C-6*
Figure C-7 Example of Step 4 for Assembling Milk Carton Traps *C-7*
Figure C-8 Example of Step 5 for Assembling Milk Carton Traps *C-7*
Figure C-9 Example of Step 7 for Assembling Milk Carton Traps *C-8*
Figure D-1 Gypsy Moth 2013 Detection Survey Template *D-2*
Figure D-2 Gypsy Moth 2013 Delimiting Survey Template *D-4*
Figure D-3 Gypsy Moth 2013 Port and Waterway Monitoring Template *D-6*
Figure D-4 Gypsy Moth Trap Sheet – 2013 Survey *D-9*
Figure E-1 Sample of PPQ Form 519—Compliance Agreement *E-2*
Figure H-1 Generic FONSI Form (page 1 of 2) *H-10*
Figure H-2 Generic FONSI Form (page 2 of 2) *H-11*
Figure H-3 Completed FONSI (page 1 of 2) *H-12*
Figure H-4 Completed FONSI (page 2 of 2) *H-13*
Figure J-1 Diagram of Spray Boom Flow Through Bleed Line to Outer Nozzles *J-7*
Figure K-1 Diagram of Spray Boom Flow Through Bleed Line to Outermost Nozzles *K-2*
Figure M-1 Example of Accurate Statement for Logs and Poles *M-2*
Figure M-2 Example of Accurate Statement for Pulpwood (or Wood Chips) *M-3*
Figure N-1 Certificate of Origin *N-2*
Figure P-1 QCA Document *P-2*
Figure Q-1 Emergency Action Notification (EAN), PPQ Form 523 *Q-2*

Gypsy Moth Manual

Tables

Table 2-1 Distances for Various Trap Densities *2-8*
Table 2-2 Hosts Preferred by All Larval Instars *2-9*
Table 2-3 Nonpreferred Hosts *2-9*
Table 2-4 Hosts Larvae Avoid *2-10*
Table 3-1 Distances for Various Trap Densities *3-3*
Table 3-2 Hosts Preferred by All Larval Instars *3-4*
Table 3-3 Nonpreferred Hosts *3-4*
Table 3-4 Hosts Larvae Avoid *3-4*
Table 7-1 MB Treatment Schedule at NAP (In chamber or under a tarpaulin) for egg masses of Lymantria dispar (gypsy moth) on such items as outdoor household articles (OHAs), quarry products, lumber, logs, and timber products *7-2*
Table 10-1 MB Treatment Schedule (at NAP) for egg masses of Lymantria dispar (gypsy moth) on deciduous, dormant woody plants (except for broadleaved genera such as Azalea, Berberis, *Camellia, Ilex*, and *Photinia*) *10-4*
Table 10-2 MB Treatment Schedule (at NAP) for Egg masses of Lymantria dispar (gypsy moth) on Dormant Evergreens (Including Conifers) and Certain Broadleaved Genera such as *Azalea*, *Berberis, Camellia, Ilex*, and Photinia *10-4*
Table 10-3 MB Treatment Schedule at NAP (Chamber or Tarpaulin) for Egg Masses of *Lymantria dispar* on Cut Conifer Christmas Trees *10-4*
Table 11-1 Cut Christmas Trees or Boughs *11-1*
Table 11-2 Cut Christmas Trees or Boughs from Ontario or Quebec *11-1*
Table 11-3 Cut PINE Christmas Trees or Branches from Ontario or Quebec *11-2*
Table 11-4 Cut Christmas Trees or Branches OTHER THAN PINE from Ontario or Quebec *11-3*
Table 11-5 Cut Christmas Trees or Branches from British Columbia, New Brunswick, or Nova Scotia *11-3*
Table 11-6 Cut PINE Christmas Trees or Branches from British Columbia, New Brunswick, or Nova Scotia *11-4*
Table 11-7 Cut Christmas Trees or Branches OTHER THAN PINE from British Columbia, New Brunswick, or Nova Scotia *11-5*
Table 11-8 Cut Christmas Trees or Branches from a Province OTHER THAN Ontario, Quebec, British Columbia, New Brunswick, or Nova Scotia *11-5*
Table 14-1 Prioritizing Risk from Transported Mobile Homes *14-7*
Table 17-1 Responsibility for Eradication Costs *17-3*

Table 17-2 Characteristics of the Early Instars of Gypsy Moth *17-6*
Table 17-3 Planning Calendar for Gypsy Moth Activities *17-7*
Table 19-1 Inter-Trap Distances for Mass Trapping *19-2*
Table 19-2 Hosts Preferred by All Larval Instars *19-4*
Table 19-3 Hosts of Later Larval Stages *19-4*
Table 19-4 Hosts Larvae Avoid *19-4*
Table 24-1 Trap Survey and Other Survey Results *24-2*
Table E-1 Compliance Agreements *E-1*
Table F-1 Insecticide Distributors *F-3*
Table G-1 Application Rates of Foray® 48B and Foray® 48F *G-12*
Table G-2 Application Rates of Foray® 76B *G-12*
Table G-3 Application Rates of Thuricide® 48LV *G-14*
Table G-4 Application Rates of Thuricide® 76LV *G-14*
Table J-1 Swath Width for Airplane *J-3*
Table J-2 Swath Width for Helicopters *J-4*
Table J-3 Acres Covered Per Minute *J-4*

Gypsy Moth Program

Acknowledgments

Cover photograph: courtesy of Susan Ellis

Chapter 1

Introduction

Contents

Purpose of the Gypsy Moth (GM) Program Manual **1-1**
Damage Caused by the Gypsy Moth **1-2**
Background on the Gypsy Moth **1-2**
Cooperation in the Gypsy Moth Program **1-3**
Dispersal of the Gypsy Moth **1-3**
Potential Damage from the Gypsy Moth **1-3**
Scope of the Gypsy Moth Program Manual **1-4**
- Sections **1-4**
- Appendixes **1-4**

Users of the Gypsy Moth Program Manual **1-5**
Related Documents **1-5**
How to Use This Manual **1-6**
Conventions **1-7**
Reporting Problems **1-7**
Maintenance of the Manual **1-8**
- Knowing What is Revised **1-8**

Preventative Safety Measures **1-8**
- Safety Reminders When Trapping **1-8**
- Vehicle Safety Reminders **1-9**

Purpose of the Gypsy Moth (GM) Program Manual

APHIS–PPQ (Animal and Plant Health Inspection Service–Plant Protection and Quarantine) is involved in the Gypsy Moth Program for the following reasons:

- To detect isolated infestations at low population levels
- To eradicate isolated infestations on State and private lands
- To prevent the artificial spread of gypsy moth to noninfested areas

NOTICE

See Glossary on page Glossary-1 for definitions of terms such as artificial spread, and for abbreviations such as APHIS or PPQ

The *Gypsy Moth Program Manual* is: 1) a source of information on the gypsy moth; and 2) a reference for methods and procedures for survey, regulatory, and control activities

Damage Caused by the Gypsy Moth

Gypsy moth is one of the most destructive pests of shade, fruit, and ornamental trees as well as hardwood forests. In the period of 1980 to 1989, the gypsy moth defoliated close to one million or more forested acres each year. (*See Leaflets and Other Materials on the Gypsy Moth* on page A-1)

Besides being a pest of trees, gypsy moth larvae are a nuisance to people.

- Larvae of the gypsy moth excrete digested leaf material while feeding in the tree canopy. For this reason, people will avoid the use of wooded parks and yards during the larval season
- When disease kills the larvae, the dying larvae produce foul odors
- The nuisances caused by the gypsy moth hinder the ability of people to enjoy the outdoors, whether in their yards or at wooded parks
- When gypsy moth populations are dense, larvae become hyperactive during the day. Heavily infested areas teem with larvae on trees, telephone poles, vehicles, fences, houses, clotheslines, and above-ground swimming pools. People avoid going outdoors because of stepping on caterpillars crawling on sidewalks and in play areas.

Background on the Gypsy Moth

Accidentally introduced into the United States in 1869 in Medford, Massachusetts, the pest spread rapidly throughout New England. Within the period of 1869 to 1890, the gypsy moth quickly developed into a serious problem in Massachusetts. The damage caused by gypsy moth was one of the key reasons Congress passed the Plant Quarantine Act of 1912.

The State of Massachusetts allotted money for eradication and then cut funding in 1900 when gypsy moth was almost eradicated. Had State funding continued, the gypsy moth problem might have been eradicated within State boundaries.

The gypsy moth is now widely established. See Appendix B for a Map of Generally Infested Areas, or Areas Quarantined in the United States for Gypsy Moth for county-by-county listings.

Research development and implementation of survey, regulatory, and control programs have made the gypsy moth one of the most studied insects in the field of pest management.

Cooperation in the Gypsy Moth Program

Since the end of the last century, Federal, State, and local government agencies have worked cooperatively to control gypsy moth populations (by containment, suppression, or eradication, alone or in combination). Cooperative programs will continue to be the focus of the U.S. Department of Agriculture (USDA).

Dispersal of the Gypsy Moth

The most effective means of spreading gypsy moth in the last 10 to 15 years has been through the movement of Outdoor Household Articles (OHAs). (Around the turn of the century, wagons were the predominate means for transporting gypsy moth.) Today, 85 percent of new infestations have been through the movement of OHAs.

With the current mobility of our population, the sprawling suburbanization of once-forested areas, and the insidious nature of the pest, the job of preventing the establishment of isolated infestations by artificial spread is a difficult one. To contain the gypsy moth, an effective job will require the following: 1) public education on the problem; 2) public support in preventing gypsy moth movement; and 3) early detection and eradication of isolated infestations.

Despite all efforts, the gypsy moth has persisted and continues to extend its range. The gypsy moth is the only forest insect that is under Federal Domestic Quarantine (7 CFR 301.45).

Potential Damage from the Gypsy Moth

Potentially, all temperate hardwood growing areas of North America are at risk from attack by the gypsy moth. Despite all attempts to prevent its movement, the gypsy moth has been quite successful in increasing its range along the leading edge of the quarantine area.

Scope of the *Gypsy Moth Program* Manual

The manual is divided into nine sections:

1. Introduction
2. Surveys
3. Regulatory
4. Control
5. Transition Area
6. Asian Gypsy Moth
7. Appendixes
8. Glossary
9. Index

Sections

The major divisions of the *Gypsy Moth Program Manual* are sections. Note that some of the sections are further divided into subsections.

All nine sections are tabbed. If large, the sections have a table of contents. Usually, each large section will contain an “Overview” and other subsections. Methods and procedures will be in the subsections. The “Overview” is a broad, general description of what is covered in the section. The subsections cover the rationale of a particular activity as well as the “how to” (procedures and material) necessary for performing tasks associated with each activity.

Appendixes

The appendixes contain information directly associated with gypsy moth activities. They provide useful, supplemental information adding to the thoroughness provided by the manual.

The Appendixes are as follows.

- Appendix A—**Leaflets and Other Materials on the Gypsy Moth**
- Appendix B—**Map of Generally Infested Areas**
- Appendix C—**How to Assemble Traps**
- Appendix D—**GM Data Collection**
- Appendix E—**Compliance Agreements (CAs)**
- Appendix F—**Insecticide Labels and MSDSs**
- Appendix G—**Methods for Gypsy Moth Eradication**

- Appendix H—**Guidelines for Environmental Documents**
- Appendix I—**Public Meetings/Public Relations**
- Appendix J—**Checking and Calibrating Aircraft**
- Appendix K—**Nozzles and Pressures**
- Appendix L—**Procedures for Composting Bark**
- Appendix M—**Accurate Statement**
- Appendix N—**Certificate of Origin**
- Appendix O—**Checklist for Outdoor Household Articles (OHAs)**
- Appendix P—**Qualified Certified Applicator (QCA) Document**
- Appendix Q—**Emergency Action Notification (EAN) PPQ Form 523**

Users of the Gypsy Moth Program Manual

This manual will serve both as a field manual for employees performing program activities and as a reference for program managers and staff officers. Primary users of this manual will be Plant Protection and Quarantine (PPQ) officers, staff officers, and State and Federal cooperators who are involved in carrying out the Gypsy Moth Program on a day-to-day basis.

Secondary users of the manual are Federal, State, county, and local regulatory officials, private industry, and part-time employees temporarily assigned to program activities.

Related Documents

The following documents are related to the Gypsy Moth Program.

- *Aerial Application Manual*
- *APHIS Safety and Health Manual No. 203*, dated May 27, 1983
- *Appalachian Integrated Pest Management FEIS 1989*
- Gypsy Moth Suppression and Eradication Projects—Final Environmental Impact Statement as Supplemented - 1985
- Code of Federal Regulations (7 CFR 301.45)
- “Don't Move Gypsy Moth” (Program Aid 1329)
- Environmental Assessments
- Gypsy Moth Proposal: Redirection of the Gypsy Moth Program and Attachment A—National Survey Plan for Gypsy Moth

- Insecticide Labels and Labelling
- Material Safety Data Sheets (MSDSs)
- National memorandums of understanding (MOUs)
- State laws that allow access to private property
- State memorandums of understanding (MOUs)
- USDA Departmental Regulation No, 4400-1, Departmental Occupational Safety and Health Management, dated January 6, 1983

NOTICE

Under Animal and Plant Health Inspection Service (APHIS) policy, only certified pest control operators may use or supervise the application of insecticides used in regulatory and control activities

- USDA Departmental Regulation No. 4400-2, Hazard Communication Programs, dated October 14, 1986
- USDA Departmental Regulation No. 5023-1, Chemical Hazard Communication, dated October 10, 1986
- USDA Hazard Communication, A Guide for Federal Agencies, August 1987
- Wildlife and Fisheries Regulations (Endangered Species Act)

How to Use This Manual

Look over the lists just given to get a feel for the scope and organization of the manual. Remember that the manual is divided into Sections and then further subdivided into subsections. Glance over the Appendixes to be familiar with their contents.

With a hard-copy manual, access the information about a particular activity by looking behind the appropriate tabs for the Table of Contents for the section (e.g., information on the Detection Survey Subsection is behind the Survey Tab).

With an online manual, access the information about a particular activity by selecting the hypertext link (the keyword in blue) and double-clicking on the link.

Conventions

The major conventions used in this manual follow.

DANGER

This is a DANGER table. Indicates that people can easily be hurt or killed.

WARNING

This is a WARNING table. Indicates that people could possibly be hurt or killed

CAUTION

This is a CAUTION table. Indicates that people could possibly be endangered and slightly hurt

NOTICE

This is a NOTICE table. Indicates a possibly dangerous situation, goods might be damaged

An example, when used, will appear in a box as follows.

EXAMPLE Examples are graphically placed in boxes within text as a means of visually separating this information from other information contained on the page.

Reporting Problems

If you disagree with the guidelines or policies contained in this manual and the problem is urgent, contact Domestic and Emergency Operations.

Domestic and Emergency Operations, Unit 134
4700 River Road
Riverdale, MD 20737
Tel: (301) 851-2112
Fax: (301) 734-8724

If you disagree with the guidelines or policies and the problem is not urgent, contact Domestic and Emergency Operations through the proper channels.

Maintenance of the Manual

The most up-to-date version of the Manual will always be available online at the PPQ Manuals Unit Web site. The PPQ Manuals Unit issues announcements for immediate manual updates via email. These will be numbered consecutively—allowing you to know if you have missed something.

The email is distributed to all PPQ employees and the email transmittal contains the following information:

- Hyperlink to the Manuals Unit Web site to download the entire manual
- List of the revised pages (and/or tables) by number and purpose of the revision(s)

Knowing What is Revised

Except for changes to the Index, revisions will be marked with change bars (black boxes) in the left margin of the changed page.

Preventative Safety Measures

Safety measures involving personnel, the public, and the use of equipment are the responsibility of all persons working on the Gypsy Moth Program. Supervisors must advise employees of safety and health regulations and notify employees of known hazardous conditions. Employees must comply with all safety and health regulations. When necessary, wear protective equipment and report hazardous situations to your supervisor. Contact your supervisor immediately when an accident or personal injury has occurred.

Safety Reminders When Trapping

- Avoid contact with poisonous plants
- Beware of aggressive animals (e.g., dogs, bulls, etc.) near the trap site
- Carry plenty of drinking water
- If trapping in an area where Lyme disease is common, wear protective clothing against deer ticks. Inspect yourself and clothing after servicing traps in a deer tick area. Preventative measures are the usual way of avoiding Lyme disease. Contact your local public health officials for other preventative measures to take.

- In areas with poisonous snakes, wear snake leggings and carry a snake bite kit
- Respect resident's property
- Use gates for entering properties, watch for electric fences
- Wear proper clothing (long pants, sturdy shoes or boots).

Vehicle Safety Reminders

- Always use your seat belts
- Carry sufficient repair tools (jack and lug wrench) and safety equipment (flares and first aid kit)
- Carry wooden blocks to block your tires when parking on a steep slope
- Check the condition of the vehicle before starting daily activities
- Check to see that passage is clear before backing up the vehicle
- Drive slowly when roads are unfamiliar, winding, narrow, or unpaved
- Keep your vehicle free of debris and unsecured items
- Obey the posted speed limits. DO NOT SPEED
- Select a safe parking place for the vehicle while servicing traps or when leaving the vehicle
- Tell your supervisor immediately whenever you are involved in an accident

Chapter 2

Detection Survey

Contents

Introduction **2-1**
Materials Needed for a Detection Survey **2-2**
Planning the Detection Survey **2-2**
Conducting the Detection Survey **2-7**
Survey Records and Maps **2-14**
Records **2-14**
Maps **2-14**
Revising Quarantine Maps **2-15**

Introduction

The purpose of a detection survey is to determine by trapping: 1) where isolated infestations of gypsy moth occur; and 2) where further delimiting surveys are required. Well-managed detection surveys will find isolated infestations of gypsy moths as soon as possible after introduction; small infestations of gypsy moth are less expensive and easier to eradicate than large infestations.

Due to differences in habitat, host availability, and the movement of Regulated Articles on page 6-1 from infested areas, not all areas within a State have the same potential for becoming infested. The risk of potential introduction will determine the areas in which a detection survey is needed. High-risk areas should include areas receiving Regulated Articles and containing preferred host trees. Before conducting the detection survey, the first task is to categorize areas within the State in regard to infestation risk.

The months in which a detection survey will start and end will depend on the climatic conditions in the area. Generally, detection surveys are started in late spring and continue until early autumn. Because pheromone traps in host trees are used in the typical detection survey, only male gypsy moths are trapped. Male moths emerge earlier than female moths. The male-attracting lure has no competition until the female moths emerge approximately one week later than the males. Therefore, the timing of the trap survey is critical; to be fully effective, traps must be in place before the female moths emerge.

Depending on seasonal weather conditions, male emergence will vary in an area by up to 10 days.

Materials Needed for a Detection Survey

The following is a list of materials needed to conduct a detection survey (you may not need all items listed).

- Colored pencils for mapping moth finds
- County or city road maps
- Delta Traps
- Disparlure (sex attractant for traps)
- First aid kit
- Grid overlay, calipers, or ruler
- PPQ Form 343 (Trapping Record) or local form
- Completing PPQ Form 391, Specimens for Determination on page 5-4
- Trap record sheets
- Small backpack
- Snake leggings
- Staples, staple gun, roofing nails, hammer, string—where owners will not allow nails (for hanging traps)
- Surveyor's flagging ribbon (marking tape), crayon, or marker for marking trap locations
- Tick repellent

Planning the Detection Survey

The steps involved in planning a detection survey follow.

Step 1: Categorize Areas Within a State (per the National Survey Plan)

Use the criteria that follow to determine the total number of square miles in each category per county. The categories will determine the density and frequency of trapping in a particular area.

NOTICE

The National Survey Plan is a minimal survey which will detect infestations before expansive land areas have to be treated. PPQ will fund this plan up to 50 percent based on available funding. Trapping densities can be increased with additional cooperator funding (on page 2-3).

The following pages contain the detailed criteria for determining categories.

Category 1—Areas having high potential for introduction of gypsy moth (people and/or Regulated Articles moving from infested areas into noninfested areas); the area must have a suitable habitat (host trees) to support a gypsy moth population

Category 1 areas include the following:

- Affluent residential areas
- Cities with military bases or major universities
- Residential areas with high amount of relocations
- Wooded, suburban residential areas

EXAMPLE Counties surrounding large metropolitan areas such as Chicago, San Francisco, Louisville, Atlanta, Raleigh, and Portland

For Category 1, the trapping density and frequency are as follows:

Trapping density:	One trap per square miles
Trapping frequency:	Every two years

Category 2—Areas having moderate potential for introduction of gypsy moth; the area has a suitable habitat (host trees) to support a gypsy moth infestation

Category 2 areas include the following:

- Areas with moderate populations such as small cities
- Contiguous wooded areas that are accessible to people
- Large, urban areas with limited habitat

EXAMPLE Blue Ridge areas of Virginia, West Virginia, Tennessee, North Carolina, and Georgia. Ozark areas of Missouri and Arkansas

For Category 2, the trapping density and frequency are as follows:

Trapping density:	One trap every four square miles (0.25 traps per sq. mi.)
Trapping frequency:	Every two years

Category 3—Areas with a low risk of introduction and a suitable habitat to support an infestation

Category 3 areas include the following:

- Noncontiguous wooded areas
- Rural agricultural areas with widely scattered small towns

EXAMPLE	The corn belt areas of Iowa, Illinois, Indiana, and Ohio

For Category 3, the trapping density and frequency are as follows:

Trapping density:	One trap every four square miles (0.25 traps per sq. mi.)
Trapping frequency:	Every four years

Category 4—Areas with a lack of habitat or potential for introduction

EXAMPLE	Great Plains grassland/wheat areas, semiarid high desert areas, and dry desert areas

For Category 4, the trapping density and frequency are as follows:

Trapping density:	None of these areas should be trapped
Trapping frequency:	NA

Category S (Special Site)-Sites where infestations are most likely to be artificially introduced

These are sites with a history of receiving Regulated Articles from Quarantine Areas and are also exposed to movement of infested vehicles (e.g., mobile homes, recreational vehicles) from Quarantine Areas.

Category S areas include the following:

- Campgrounds
- Mobile home parks
- Nurseries
- Saw mills and veneer mills
- State and Federal parks
- Tourist attractions

For Category S, the trapping density and frequency are as follows:

Trapping density:	Random set (no more than four traps per site or per square mile)
Trapping frequency:	Every two years

Plan to trap for gypsy moth in all categories except Category 4.

Step 2: Determine Trapping Requirements

When determining trapping requirements, consider the frequency for trapping an area and the last time the area was trapped. If an area must be trapped every two years and the area was trapped last year, do not trap the area in the current year.

Step 3: Determine Survey Needs (Personnel and Supplies)

The following formulas will determine trap needs and personnel for survey activities:

Step 3a: Formula For Determining Trap Needs

Number of square miles in a category multiplied by number of traps per square mile (trap density). Divide the total by the trapping frequency (in years) to get the number of traps required per year.

$$\frac{\text{\# sq. mi. x trap density (\# traps per sq. mi.)}}{\text{trapping frequency in years}} = \text{total no. of traps required}$$

EXAMPLE Figure trap needs for Category 1 which is 250 sq. mi. in total area.

For a Category 1 area which is 250 sq. mi. and trapped every two years, 125 traps are needed.

$$\frac{\text{250 sq. mi. x 1 (\# traps per sq. mi.)}}{\text{2 (trapping frequency)}} = \frac{250}{2} = \text{125 traps}$$

Step 3b: Formula For Determining Personnel Needs

Divide the trap total by the number of traps a trap tender can service under the conditions experienced in a specific State. For detection surveys, a national average is 400 traps per trap tender. In mountainous areas, because of the terrain, the average falls to 250 traps per trap tender. (For delimiting surveys, the average is 750 traps per trap tender; for transition zone surveys, the average is 600 traps per trap tender.)

$$\frac{\text{trap total (= total number of traps)}}{\text{\# of traps a trap tender can service}} = \text{total trap tenders required}$$

EXAMPLE Figure how many trap tenders to hire for the season when conducting a detection survey that requires 1,200 traps.

$$\frac{\text{1,2000 traps (traps requiring service)}}{\text{400 (\# of traps a trap tender can service)}} = \text{total no. of traps required}$$

Step 4: Prepare a Trapping Budget

After determining the needed traps and trap tenders, prepare a trapping budget.

Budget for the following expenses (adjust for inflation, e.g., pay and mileage increases):

- Transportation costs for trap tender
- Trap tenders' hours
- Trap and lure costs
- Other materials (staples, staplers, nails, hammers, maps)

If the criteria of the National Survey Plan (guidelines covered in this manual) are followed, APHIS pays half the cost of the survey; the State pays the remaining half.

EXAMPLE You're going to hire six trap tenders to service 2,550 traps and you need to determine costs. Using the above assumptions in figuring costs, calculate salary, mileage, traps, and a total.

Salary: 440 hours/person x 6 trap tenders x $6	=	$15, 840.00
Mileage: 7,000 miles x 6 trap tenders x $0.32½	=	$13,650.00
Traps: 2,550 traps x $0.80	=	$2,040.00
Total		$31,530.00

Therefore, APHIS pays $15,765 toward the survey cost while the State pays the remaining $15,765 ($31,530 divided by 2).

If the State cannot contribute its half, PPQ will still pay half of the cost of the survey at National Survey Plan levels. In the preceding example, the State should pay $14,190—its half of the cost. But if the State could only contribute $7,000 (roughly one-quarter of the cost), APHIS would still pay $14,190. As a result, the total funding toward the survey is only $21,190 (roughly three-quarters of the total cost). So, the density or survey traps or the frequency of trapping must be cut by one-quarter unless funds can be found elsewhere.

Trapping cannot exceed the level of funding.

If the State wants to increase trapping density or frequency beyond the National Survey Plan, the State must bear the additional costs above its 50 percent.

Conducting the Detection Survey

Here is an overview of the steps involved in conducting a detection survey:

Step 1: Plot Trap Locations on a Map

Plot trap locations well in advance of the survey season (late winter/early spring). Overlay a uniform grid on a map and mark the grid points. Using a grid to plot trap locations is important for ensuring proper trap distribution. Plotting the trap locations on planned grids allows for results comparison from location to location. Randomly placed traps are effective only when trapping special sites (Category S—campgrounds, tourist attractions, rest stops, recreational areas).

When plotting trap locations on the map, consider the scale of the map and the trapping density required (e.g., Category 1 requires one trap per square mile, so plot a trap every square mile).

Devise a system to ensure proper trap distribution. Use a grid, a ruler, or calipers to plot trap locations on a map. Following the square mile blocks on most county or city maps is also a good system.

The scale on a county map is appropriate for the detection survey.

Table 2-1 shows distances for various trap densities.

Table 2-1 Distances for Various Trap Densities

Traps per Square Mile	Distance Between Traps (In feet)
0.25	10,560
1.00	5,280

Once you have plotted trap locations on the map, number the traps. Number each trap consecutively within a county. Mark the trap number clearly on the map.

Figure 2-1 shows traps plotted for a detection survey.

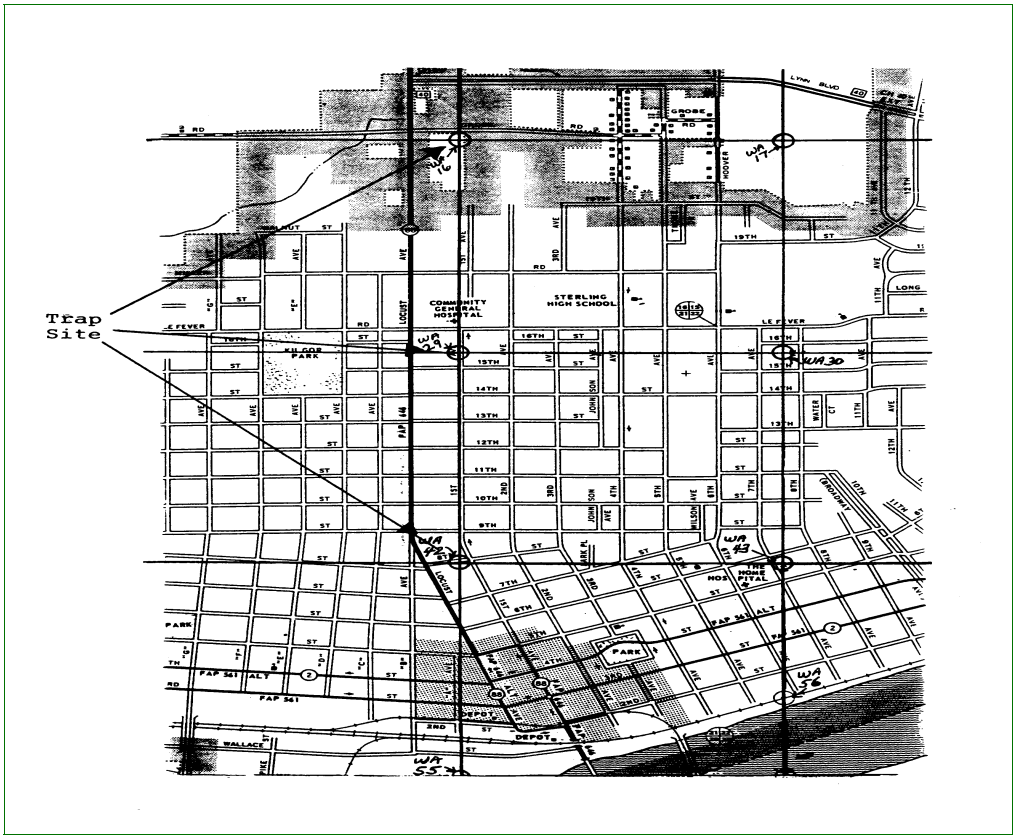

Figure 2-1 Example of Traps Plotted for Detection Survey

Step 2: Select Sites for Placing Traps

Using the map with the trapping sites plotted, select individual trap sites as close to the plot location as possible. Try to place all traps on preferred hosts. Host trees are grouped according to gypsy moth preference and are as follows:

Table 2-2 Hosts Preferred by All Larval Instars

◆Apple	◆Boxelder	◆Oaks (all types)
◆Aspen	◆Larch	◆Speckled alder
◆Basswood	◆Linden	◆Sweet gum
◆Birch (except yellow and black)	◆Mountain ash	◆Willow

Table 2-3 Nonpreferred Hosts

◆Beech	◆Hemlock	◆Pine
◆Blueberry	◆Locust	◆Spruce
◆Chestnut	◆Maple	

Table 2-4 Hosts Larvae Avoid

◆Arborvitae	◆Elder	◆Juniper
◆Ash	◆Currant	◆Poison ivy
◆Azalea	◆Grape	◆Red cedar
◆Balsam fir	◆Holly	◆Sycamore
◆Butternut	◆Honeysuckle	◆Tulip poplar
◆Cedar	◆Horsechestnut	◆Yellow poplar
◆Dogwood		

Step 3: Set Traps and Mark Location

Step 3a: Setting Traps

The timing for setting traps is critical. Set traps before male moths emerge. One way to gauge the date by which all traps must be set is to determine the earliest date “native” moths were caught in previous years.

Remove lure from its package one week before use in the field. Lures exposed to air before field use are more effective in trapping moths.

NOTICE

Directions for assembling traps are in How to Assemble Traps on page C-1.

The approximate trap locations are already marked on a map. Use discretion in selecting the exact location of the traps. Many factors determine where to set a trap in a given area.

General Rules for Setting Traps

Consider the following general rules when setting traps.

1. Male moths usually follow woodland edges and lines of tree growth. Moths do not frequent open areas where there are no trees or shrubs.
2. If available, woodland edges are the best sites for trap placement. Traps are most effective when placed at or near a woodland corner. If there is a choice, place the trap on the windward side so the prevailing wind currents will carry the scent (pheromone) into the woods.
3. If there are no woodlands or residential sites within a reasonable distance (500 to 1,000 feet) from the plotted map location, then the best location for a trap is at the end of a hedge row or tree leading to a wooded area.
4. Place traps four to five feet high (or eye level if less than five feet) on tree trunks because most flight occurs near ground level. In areas frequented by small children or cattle, place the trap out of their sight and reach. Because of vandalism and pilferage, trap placement is especially important when trapping Category S areas (such as recreational parks, campgrounds, and tourist attractions).

5. If possible, place traps in shady areas. **Do not** set the trap where foliage or branches will block the trap openings.
6. Complete trap record including a sketch showing specific trap location.
7. Avoid setting traps on or in the following situations.
   A. Close to gravel road (place trap at least 50 feet away)
   B. Properties that are for sale
   C. Parks or open areas where people can easily see the traps
   D. Properties with aggressive dogs
   E. Private property without the owner's permission
   F. School properties or along passageways where students walk
   G. Sites that cannot be accurately described
   H. Sites where farm animals may damage or destroy traps
   I. Sites where road construction is scheduled or in progress
   J. Sites within locked gates
   K. Sites obscured by tree branches
   L. Trees having poison ivy vines
   M. Trees marked for cutting or removal

The distance between traps depends on the selected trap density and the extent of favored host trees available. Place the traps in a uniform array on choice hosts or in a preferred habitat.

Step 3b: Marking Trap Locations

Mark trap locations to expedite trap tending as well as supervision. Use plastic flagging ribbon or marking crayon. To mark a trap location, tie a piece of flagging ribbon to a telephone pole, tree trunk, or other suitable object at the roadside. The ribbon should be visible from the road when approaching from either side. Mark trap location only when necessary because it might lead others to the trap causing vandalism.

Brightly colored plastic tape (fluorescent orange) has proven to be the best flagging ribbon. The marking crayon must be sufficiently soft to mark wet trees. Place a small piece of flagging ribbon near the trap.

In urban areas where streets are named and houses are numbered, use the house address for locating traps. Do not mark trap location with ribbons or marking crayons in urban areas. Also, use restraint in marking roadside rest areas, picnic areas, tourist attractions, and other high-use areas where the ribbon will detract from the site's appearance.

Step 4: Check the Traps

Check each trap at least once during the trapping season; however, more frequent trap checking is preferred. Under ideal conditions, trap checking will start when the male moths start flying. Trap checking two weeks after the initial flight of the male moths is also desirable. Where vandalism is likely, check the traps more often.

Plan your trap-checking route before leaving the office. Select a route that will eliminate overlapping travel.

When checking traps, have a supply of replacement traps to replace all vandalized and missing traps. When replacing a trap, number the replacement trap with the same number as the original trap with an additional indicator (such as the letter "R," e.g., 416-R) highlighting that it is a replacement trap.

Take the lure from its package one week before use and expose to air.

When checking traps, do the following.

1. Check overall trap condition and replace badly damaged traps.
2. When trap contains a suspect moth, remove the trap without disturbing the specimen. Note on the trap record sheet the date and exact location of recovery and inform the supervisor.
3. Record the trap inspection by noting the date on the trap and the PPQ Form 343 (Trapping Record) or local trap record sheet.
4. Write the following information on the trap: Trap numbers, county, trapper's initials, date trap set, and each date the trap is checked.

Check the traps by opening one triangle end. Look into the trap to see if there are any male moths. If a suspect male is present, remove and replace the trap. Always use lure that has been aired for one week.

Step 5: Submit Gypsy Moth Suspects

NOTICE

MANAGERS: To roughly delimit small infestations, be ready to move rapidly to add or move traps as needed when gypsy moths are found. (*See Interpret Survey Results* on page 2-13)

Submit the trap with the suspect moth to your supervisor or designated identifier. Record on the bottom of the trap the date, time, results, and any pertinent observation or action taken.

Record the date and all circumstances about the catch of suspect moths on the trap record sheet. Accurate information is essential to the trapping program.

Complete the form each time you check the trap and find a gypsy moth. The data you report is as important as the trap placement.

Step 6: Remove Traps

At the end of the trapping season remove all traps set and examine each for gypsy moths. Carefully look for missing traps. If a trap number cannot be read, rewrite the number on the bottom of the trap.

When removing the trap, remove all other materials (string, nails, lures, staples, wire) used in trapping. Also, remove all flagging tape. Give all traps removed to the person in charge of the survey. For each trap containing a suspect moth, provide the following information: location (State, county, town); trap number; trap tender's name or identification number; date; and host tree name. Open traps on final check because moths can be missed when just looking through the trap ends. Flatten empty, used traps and dispose of by burning in an incinerator or by burying at a sanitary landfill. Be sure to destroy the lures with the traps.

Step 7: Report Survey Results

See GM Data Collection on page D-1 for instructions on reporting survey data into the Integrated Plant Health Information System (IPHIS). **Do not** report into IPHIS until you have all the data collected and summarized by county. IPHIS reports will summarize survey results by county.

Step 8: Complete Survey Maps

Record all positive trap catches on the survey field map. Survey maps with positive and negative finds are used for postseason review and decision making. Moth catch patterns will help when planning delimiting surveys in the next trapping season. At the end of the season, make permanent maps by transferring information from the field maps. Be neat, clear, and accurate when transferring information. It is very important that survey results are accurately placed on the map.

Step 9: Interpret Survey Results

If you found gypsy moth during your survey, interpret the survey results. Trap catches of gypsy moth may warrant conducting a delimiting survey in the next year.

The decision to delimit in the following year is subject to local interpretation based on the following factors.

- Available resources
- Host vegetation
- Number trapped in current year
- Number trapped in previous year
- Potential for artificial dispersal

To help with the decision to delimit, increase trapping density to 16 traps per square mile in the immediate vicinity of a positive trap if enough time remains in the flight period and if resources permit.

For criteria and methods on delimiting, consult Delimiting Survey on page 3-1.

Survey Records and Maps

To document the detection survey, accurate and complete survey records and maps must be maintained.

Records

Maintain a record of all trap locations including any descriptive information needed to help locate traps (trap site map or PPQ Form 353). Include information such as date set, date inspected, and date removed, as well as trap catches. Record this information on a trap record sheet.

Keep a separate record of any egg-mass surveys conducted. Use local guidelines for proper record maintenance.

In developing local guidelines for survey records, determine what information is needed and the most efficient manner for recording each item.

Record all positive trap findings and verify trap locations on the map.

Record trapping data throughout the season, as frequently as possible, into the IPHIS database, with all data entered by November 1 for planning purposes for the following year. *See GM Data Collection* on page D-1 for instructions on reporting into IPHIS.

Maps

For detection surveys, county or city maps are satisfactory. The trap pattern will determine what map scale to use.

Consecutively number every trap location within each county. The type, number, and distribution of maps will vary according to local needs.

Prepare trap maps before the trapping season (the preferred method) using a grid system to assure proper trap distribution. Use a grid, calipers, a ruler, or an overlay to plot trap location. When you use the grid system of plotting trap locations before field placement, adjust trap locations in the field. Make corrections on all maps to show the actual trap locations.

When adding traps to positive trap sites, number the additional traps with the same number as the supplemented trap with a letter added. E.g., if trap 25 is supplemented, the first additional trap would be 25a, the second 25b, and so on.

Staple or glue a map legend to each survey map to indicate the program starting date, completion date, name of trapper, and any other pertinent information.

When using maps for postseason decision making, show both negative and positive trap catches on the map. When determining the pattern of trap catches and establishing treatment boundaries, the negative traps are very important.

Revising Quarantine Maps

Revise quarantine maps annually on a schedule coordinated with revisions of the quarantine area. Use a State map with counties outlined to show proposed revisions to the quarantine map.

Communicate quarantine revision information through channels to the Regional Office.

Regional Offices should submit proposed revisions of the maps to Program Support in Riverdale, Maryland.

Chapter 3

Delimiting Survey

Contents

Introduction **3-1**
Important Features of the Delimiting Survey **3-1**
Materials Needed for Conducting a Delimiting Survey **3-2**
Steps for Conducting a Delimiting Survey **3-2**
Records and Maps **3-8**
- Records **3-8**
- Maps **3-9**
- Revising Quarantine Maps **3-9**

Introduction

The delimiting survey will determine: 1) the presence or absence of an infestation; and 2) the approximate size of an infestation, if present. When a single trap (or several loosely associated traps) catch multiple moths, conduct a delimiting survey. The delimiting survey will usually be done in the following year.

Important Features of the Delimiting Survey

The standard delimiting survey trap array is 16 traps per square mile. Special circumstances, such as the presence of sensitive areas or habitats containing endangered species, may require a trap array of more than 16 traps per square mile.

Trapping is at 16 to 36 traps per square mile out to the next negative trap.

The positive trap (or positive traps) will be at the center of the trap array. The survey results from the detection survey will supply information for positioning the trap array.

When conducted after an eradication effort, a delimiting survey is called a posttreatment survey. Use the delimiting survey or mass trapping survey instructions for conducting a posttreatment survey.

Materials Needed for Conducting a Delimiting Survey

- Colored pencils for mapping moth finds
- County or city road maps
- Delta Traps
- Disparlure (sex attractant for traps)
- First aid kit
- Grid overlay, calipers, or ruler
- PPQ Form 343 (Trapping Record) or local form
- *ARS-748 (Identification Request)* on page 5-3 or ***PPQ Form 391 (Specimens for Determination)*** on page 5-4
- Small backpack
- Snake leggings
- Staples, staple gun, roofing nails, hammer, string—where owners will not allow nails (for hanging traps)
- Surveyor's flagging ribbon (marking tape), crayon, or marker for marking trap locations
- Tick repellent
- Trap record sheets

You may not need all items listed.

Steps for Conducting a Delimiting Survey

Step 1: Plot Trap Locations on a Map

Examine the map from the previous year's detection survey showing all positive traps. When plotting trap locations on a new map, consider the scale of the map and the required trapping density (i.e., 16 to 36 traps per square mile). Center the grid on the suspect infestation. Generally, 1 to 4 square miles of delimiting will be sufficient or a ½- to 1-mile boundary (dependent on trapping category in use in the area of detection). If the suspect area is spread out, it will be necessary to trap a larger area.

Plot trap locations well in advance of the survey season (late winter/early spring). Plotting the traps on planned grids allows for results comparison from location to location. Do not place traps randomly in the field.

If the map does not have a grid, plot trap locations using a ruler or calipers. Following the square mile blocks on most county maps is also a good system.

The scale on a topographic or similar large-scale map is appropriate for the delimiting survey.

The following table shows distances for various trap densities.

Table 3-1 Distances for Various Trap Densities

Traps per Square Mile	Distance Between Traps (in feet)
16	1,320
25	1,056
36	880

Figure 3-1 Example of Traps Plotted for Delimiting Survey

Once trap locations are plotted on the map, number the traps. Number each trap consecutively within a county. Mark the trap number clearly on the map.

Step 2: Select Sites for Placing Traps

Using the map with the trapping sites plotted, select individual trap sites as close to the plot locations as possible. Try to place all traps on preferred hosts. Host trees are grouped according to gypsy moth preference and are as follows:

Table 3-2 Hosts Preferred by All Larval Instars

◆Apple	◆Box elder	◆Speckled aider
◆Aspen	◆Larch	◆Sweet gum
◆Basswood	◆Linden	◆Williow
◆Birch (except yellow and black)	◆Mountain ash	
	◆Oaks (all types)	

Table 3-3 Nonpreferred Hosts

◆Beech	◆Hemlock	◆Pine
◆• Blueberry	◆• Locust	◆• Spruce
◆Chestnut	◆• Maple	

Table 3-4 Hosts Larvae Avoid

◆Arborvitae	◆Elder	◆Juniper
◆Ash	◆Currant	◆Poison Ivy
◆Azalea	◆Grape	◆Red cedar
◆Balsam fir	◆Holly	◆Sycamore
◆Butternut	◆Honeysuckle	◆Tulip poplar
◆Cedar	◆Horsechestnut	◆Yellow poplar
◆Dogwood		

Step 3: Set Traps and Mark Locations

Step 3a: Setting Traps

The timing for setting traps is critical. Set traps before male moths emerge. One way to gauge the date by which all traps must be set is to determine the earliest date “native” moths were caught in previous years

Remove lure from package one week before use in the field. Lures exposed to air before field use are more effective in trapping moths.

The approximate trap locations are already marked on a map. Use discretion in selecting the exact location of the traps. Many factors determine where to set a trap in a given area.

General Rules For Setting Traps

1. Male moths usually follow woodland edges and lines of tree growth. Moths do not frequent open areas where there are no trees or shrubs.
2. If available, woodland edges are the best sites for trap placement. Traps are most effective when placed at or near a woodland corner. If there is a choice, place the trap on the windward side so the prevailing wind currents will carry the scent (pheromone) into the woods.
3. If there are no woodlands or residential sites within a reasonable distance (500 to 1,000 feet) from the plotted location, the best location for a trap is at the end of a hedge row or tree line leading to a wooded area.
4. Place traps four to five feet high (or eye level if less than five feet) on tree trunks because most flight occurs near ground level. In areas frequented by small children or cattle, place the trap out of their sight and reach. Because of vandalism and pilferage, trap placement is especially important when trapping Category S areas (such as recreational parks, campgrounds, and tourist attractions).
5. If possible, place traps in shady areas. Do not set the trap where foliage or branches will block the trap openings.
6. Complete trap record including a sketch showing specific trap location.
7. Avoid setting traps on or in the following situations.
   A. Close to gravel road (place trap at least 50 feet away)
   B. Properties that are for sale
   C. Parks or open areas where people can easily see the traps
   D. Properties with aggressive dogs
   E. Private property without the owner’s permission
   F. School properties or along passageways where students walk
   G. Sites that cannot be accurately described
   H. Sites where farm animals may damage or destroy traps
   I. Sites where road construction is scheduled or in progress
   J. Sites within locked gates
   K. Sites obscured by tree branches
   L. Trees having poison ivy vines
   M. Trees marked for cutting or removal

The distance between traps depends on the selected trap density. If possible, place the traps on preferred hosts or in a preferred habitat; however, never disrupt the required trap array.

Step 3b: Marking Trap Locations

Marked trap locations will aid both trap tenders and supervisors. To mark a trap location, use plastic flagging ribbon (or marking crayon). Tie a piece of flagging ribbon to a telephone pole, tree trunk, or other suitable object at the roadside. The flagging ribbon should be visible from the road when approaching from either side. Mark trap locations only when necessary because marked traps are prone to vandalism.

Brightly colored plastic tape (fluorescent orange) has proven to be the best flagging ribbon. The marking crayon must be sufficiently soft to mark wet trees. Place a small piece of flagging ribbon near the trap.

In urban areas where streets are named and houses are numbered, use the house address for locating traps. Do not mark trap location with ribbons or marking crayons in urban areas. Also, use restraint in marking roadside rest areas, picnic areas, tourist attractions, and other high-use areas where the ribbon will detract from the site's appearance.

Step 4: Check the Traps

After setting all traps, check them on a regular schedule every 10 to 14 days, if possible. If a regular schedule is not possible, check each trap site at least once during the trapping season. Check traps more frequently when determining the timing of male emergence (pupae to adult) and when the risk of infestation or vandalism is likely.

Plan your trap-checking route before leaving the office. Select a route that will eliminate overlapping travel.

When checking traps, have a supply of replacement traps to replace all vandalized and missing traps. If you replace a trap, number the replacement trap with the same number as the original trap, with an additional indicator (such as the letter "R," e.g., 416-R) highlighting that it is a replacement trap. Remember to take the lure from the package and expose to air one week before use.

When checking traps, do the following.

1. Check overall trap condition and replace badly damaged traps.
2. Check the traps by opening one triangle end. Look into the trap to see if there are any male moths.

3. When a trap contains a suspect moth, remove the trap without disturbing the specimen. Note on the trap record sheet the date and exact location of recovery and inform the supervisor.
4. Record the trap inspection by noting the date on the trap and the PPQ Form 343 (Trapping Record) or local trap record sheet.

NOTICE

MANAGERS: To delimit small infestations precisely, be ready to move rapidly to add or move traps as needed when gypsy moths are found.

Step 5: Submit Gypsy Moth Suspects

Submit the trap with the suspect moth to your supervisor or designated identifier. Record on the bottom of the trap the date, time, results, and any pertinent observation or action taken.

Record the date and all circumstances about the catch of suspect moths on the trap record sheet. Accurate information is essential to the trapping program. Complete the form each time you check the trap and find a gypsy moth. The data reported is as important as the trap placement. Remember, positive finds may result in the area being declared as gypsy moth infested.

Step 6: Remove Traps

At the end of the trapping season, remove all traps and examine for gypsy moths. Carefully look for missing traps. If a trap number cannot be read, rewrite the number on the bottom of the trap.

When removing the trap, remove all other materials (string, nails, staples, wire) used in trapping. Also, remove all flagging tape. Give all traps removed to the person in charge of the survey. For each trap containing a suspect moth, provide the following information: location (State, county, town); trap number; trap tender’s name or identification number; date; and host tree, if known. Open traps on final check because moths can be missed when just looking

through the trap ends. Flatten empty, used traps and dispose of by burning in an incinerator or by burying at a sanitary landfill.

Step 7: Report Survey Results

See Appendix D for instructions on reporting survey data into IPHIS. **Do not** report into IPHIS until you have all the data collected and summarized by county. IPHIS reports will summarize survey results by county.

Step 8: Complete Survey Maps

Record all positive trap catches on the survey field map. Survey maps with positive and negative finds are used for postseason review and decision making. At the end of the season, make permanent maps by transferring information from the field maps. Be neat, clear, and accurate when transferring information. It is very important that survey results are accurately placed on the map.

Step 9: Interpret Survey Results

If the traps do not find gypsy moth during the delimiting survey, assume there is no detectable infestation in the area delimited. If the traps have positive finds, exclude the boundary traps containing single moths so the remaining traps delimit the probable boundaries of the infestation. Generally, traps containing the highest densities of gypsy moths reveal the center of the infestation.

Inform cooperators and supervisors (such as the Senior PPQ Officer, the State Plant Health Director (SPHD), or the Regional Program Manager) of the infestation. Begin to plan for an eradication effort.

Records and Maps

Records

Maintain a record of all trap locations including any descriptive information needed to help locate traps; use a trap site map or PPQ Form 353. Maintain information such as date set, date inspected, and date removed; maintain a record of trap catches. Record this information on a trap record sheet.

Keep a separate record of any egg-mass surveys conducted. Use local guidelines for proper record maintenance.

In developing local guidelines for survey records, determine what information is needed and the most efficient manner for recording each item.

Record all positive trap findings and verify trap location on the map.

Record trapping data throughout the season, as frequently as possible, into the IPHIS database, with all data entered by November 1 for planning purposes for the following year. See **Appendix D** for instructions on preparing data for IPHIS.

Maps

For planning, conducting, and recording a delimiting survey, a topographic map from the U.S. Geological Survey with a scale of 1:24,000 is satisfactory. On a city map, the scale should be at least two inches per mile. A recent map showing forested areas and new construction is preferable. Maps of a different scale may be used.

Consecutively number every trap location within each county. The type, number, and distribution of maps will vary according to local needs.

Prepare trap maps before the trapping season (the preferred method) using a grid system to assure proper trap distribution. Use a grid, calipers, a ruler, or an overlay to plot trap location. When you use the grid system of plotting trap locations before field placement, adjust trap locations in the field. Make corrections on all maps to show the actual trap locations.

When adding traps to positive trap sites, number the additional traps with the same number as the supplemented trap with a letter added. E.g., if trap 25 is supplemented, the first additional trap would be 25a, the second 25b, and so on. When traps are set in recommended grid densities, there is usually no need for supplemental traps.

Staple or glue a map legend to each survey map to indicate the program starting date, completion date, name of trapper, and any other pertinent information.

When using maps for postseason decision making, show both negative and positive trap catches on the map. When determining the pattern of trap catches and establishing treatment boundaries, the negative traps are very important.

Revising Quarantine Maps

Revise quarantine maps annually on a schedule coordinated with revisions of the quarantine area. Use a State map with counties outlined to show proposed revisions to the quarantine map.

Communicate quarantine revision information through channels to the Regional Office.

Regional Offices should submit proposed revisions of the maps to PPQ Program Support in Riverdale, Maryland.

Chapter

4

Other Survey Tools

Contents

Introduction **4-1**
Egg-Mass Survey **4-1**
- Purpose of Egg-Mass Surveys **4-1**
- When to Survey **4-2**
- Where to Survey **4-2**
- How to Survey **4-3**

Basic Procedures for Egg-Mass Surveys **4-3**
- Egg-Mass Surveys Using Targeted Visual Surveys (Transects) **4-3**
- Egg-Mass Surveys Using Small Plots **4-4**
- Egg-Mass Surveys Using General Observation Technique **4-5**
- Egg-Mass Surveys For Regulatory Purposes **4-5**

Larval Trapping Survey **4-6**
- Purpose **4-6**
- How to Trap Larvae **4-7**

Introduction

This section contains information on survey methods that do not use pheromone traps. Specifically, this subsection covers procedures for two survey methods:

- Egg-mass surveys
- Larval trapping surveys

Egg-mass surveys and larval trapping surveys are often done to supplement an adult trapping survey and confirm that reproducing populations are present.

Egg-Mass Survey

Purpose of Egg-Mass Surveys

Egg-mass surveys are done for several reasons.

- To confirm an infestation by providing convincing evidence (egg masses) that reproduction has occurred

- To determine the population level in a specific area so the status may be changed (e.g., noninfested to Transition Area; Transition Area to generally infested Regulated Area)
- To determine the population level near a high-risk site so the correct control and/or regulatory actions can be applied

When to Survey

The best time to conduct an egg-mass survey is after leaf drop; however, egg-mass surveys can be done anytime after the females have finished depositing eggs. A preliminary survey may help to determine if the females are present and laying eggs; the buff egg masses and the white female moths are easy to see on tree trunks and branches.

Where to Survey

Egg-mass surveys, which involve the counting of egg masses, are useful in areas with moderate or high infestation levels.

Egg-mass surveys are particularly desirable when: 1) egg masses are the only life stage present; 2) survey results are needed immediately, as for treatment decisions; and/or 3) populations are high enough to make the effort worthwhile.

Usually, egg-mass surveys will not detect low-level populations with reliability; therefore, egg-mass surveys are of limited value in areas with low-level populations. (Larval trapping is a better survey method in areas with light levels of infestation.)

Egg-mass surveys in the following areas are most likely to detect infestations.

- Areas adjacent to and downwind from known infested areas
- Areas close to known infested areas, particularly those areas where traps catch numerous moths
- Areas downstream from known infested areas
- Areas, such as Federal and State parks, used by recreational vehicles
- Areas where contacts suspect possible introduction because of observed defoliation, sightings of females, or some other indicator
- Areas where establishments receive Regulated Articles
- Areas where numerous household moves occur
- Areas with preferred hosts

How to Survey

A well-established infestation may exist even though few, if any, egg masses are easily seen. Therefore, surveyors must know the characteristics of the egg masses and the preferred egg-laying sites.

Leaflets and Other Materials on the Gypsy Moth on page A-1 has information on the characteristics of the egg masses.

Preferred egg-laying sites are in the following locations:

- In bark cavities, under loose bark, and in bark crevices
- On branches on the ground or on the underside of any type of ground litter, such as tin cans
- On logs—including firewood
- On Outdoor Household Articles (OHAs), such as birdhouses and picnic tables
- On signs
- On stone walls and in the crevices of stone walls
- On the underside of rocks not tight to the ground
- On tree trunks in sheltered spots, such as under limbs
- Under the siding and eaves of buildings

In fact, egg masses may be found anywhere near trees in areas with preferred hosts.

Larval skins and pupal cases may be found even when egg masses are not.

Basic Procedures for Egg-Mass Surveys

The following sections discuss the three basic procedures for egg-mass surveys.

1. Egg-Mass Surveys Using Targeted Visual Surveys (Transects)
2. Egg-Mass Surveys Using Small Plots
3. Egg-Mass Surveys Using General Observation Technique

Egg-Mass Surveys Using Targeted Visual Surveys (Transects)

Egg-mass surveys for regulatory purposes are usually targeted visual surveys.

Targeted Visual Surveys (transects) examine an area of 50 feet by 20 feet, 10 feet on either side of a 50-foot centerline. The total area examined is 1,000 ft2, roughly equivalent to the 1,089 ft2 in the 1/40 of a acre plots in the next technique.

Before the egg-mass survey, do the following:

1. Know how to identify and locate the egg masses.
2. Select the sites where gypsy moth egg masses are most likely to be (use the criteria on the previous page).
3. Inform others of your intended survey area.

Procedure for the targeted visual survey—at each survey site, do the following:

1. Select an object, such as a tree or rock, 50 feet away.
2. Walk slowly toward the selected object, scanning 10 feet to each side, in front, and overhead. Examine all preferred egg-laying sites. (*How to Survey* on page 4-3)
3. Count all observed egg masses.
4. Record all critical information, such as number of egg masses, site, method, and date of survey.

Egg-Mass Surveys Using Small Plots

Before the egg-mass survey, do the following:

1. Know how to identify and locate the egg masses.
2. Plan to place plots at the sites where gypsy moth egg masses are most likely to be. (Use the criteria from *Where to Survey* on page 4-2) Plots must be at least 300 feet apart. If circular, the plots will have a radius of 18.6 feet; therefore, they will be 1/40 of a acre (1,089 ft^2).
3. Prepare a stake which will be driven into the center of the circular plot; this stake will have a radius-marking line of 18.6 feet attached. With its attached line stretched, this stake will help locate points within, on, and outside the circumference of each plot. (If four additional stakes are placed, equidistant, on the circumference, these stakes, along with the center stake, will form quadrants.)
4. Inform others of your intended survey area.

Procedure for the small-plot egg-mass survey—at each survey site, do the following:

1. Place the stake in the center of the plot.

2. Use the attached line to establish the circumference of the plot (or boundary of the quadrants).
3. Examine the plot (or quadrant). Start on a known radius and work around the circle. Scan in front, to the sides, and overhead. Examine all preferred egg-laying sites (See *How to Survey* on page 4-3.)
4. Count all observed egg masses.
5. Record all critical information, such as number of egg masses, site, method, and date of survey.

Egg-Mass Surveys Using General Observation Technique

Before the egg-mass survey, do the following:

1. Know how to identify and locate the egg masses.
2. Select a positive trap (or select an area suspected of being infested) as a starting point.
3. Arrange to have additional help to speed the survey.
4. Inform others of your intended survey area.

Procedure for the general observation technique—at each survey site, do the following:

1. Start at the positive trap (or within the area suspected of being infested).
2. Examine transit lines placed on the main compass points (north, northeast, east, southeast, south, southwest, west, and northwest). Examine all preferred egg-laying sites (See *How to Survey* on page 4-3) out to a distance of 0.5 miles.
3. Count all observed egg masses.
4. Record all critical information, such as number of egg masses, site, method, and date of survey.

No more than two days should be spent at any one site unless unusual circumstances warrant a longer evaluation time.

Egg-Mass Surveys For Regulatory Purposes

Typically eggs-mass surveys for regulatory purposes are done in areas surrounding establishments handling Regulated Articles. These surveys allow the environs of the establishments to be examined.

The following environs are of particular interest:

- Areas in and around campgrounds
- Forest edges near Christmas tree plantations
- Forest edges near mills

- Forest edges near nurseries

Each egg-mass survey for regulatory purposes will provide information to guide quarantine decisions for the establishment handling the Regulated Articles. Typical quarantine decisions involve the following:

- Is gypsy moth present in the environs of the establishment?
- If gypsy moth is present, do the environs of the establishment need to be treated?

Before the survey, know what egg masses look like and where to find them.

To assess population levels at each survey site, use the *Egg-Mass Surveys Using Targeted Visual Surveys (Transects)* on page 4-3 to survey for egg masses. Walk in areas with preferred host trees, if possible.

Procedure for the Survey for Regulatory Purposes

1. Begin the survey in areas that are of importance (forest edges, campgrounds, campground edges).
2. Select an object transecting an area with preferred hosts.
3. Walk slowly toward the selected object, scanning in front, to the sides, and overhead. Examine all preferred egg-laying sites (See *How to Survey* on page 4-3).
4. Count all observed new egg masses.
5. Record all critical information, such as number of egg masses, site, method, and date of survey.
6. Repeat above steps as needed in the environs of the establishment.
7. Determine the appropriate regulatory action.

Larval Trapping Survey

Purpose

Larval trapping has the following uses:

- To assess gypsy moth larval development
- To contribute to research (contributions to research are not funded by PPQ)
- To determine the presence or absence of a reproducing population
- To determine where and when to apply control methods (chemical or behavioral methods for eradication)

- To evaluate treatments

If desired, use larval trapping along with or in place of egg-mass surveys to determine an area to be treated.

Larval trapping takes advantage of that later instars seeking hiding places. The larval trap offers an artificial hiding place for the larvae (*Figure 4-1* on page 4-7).

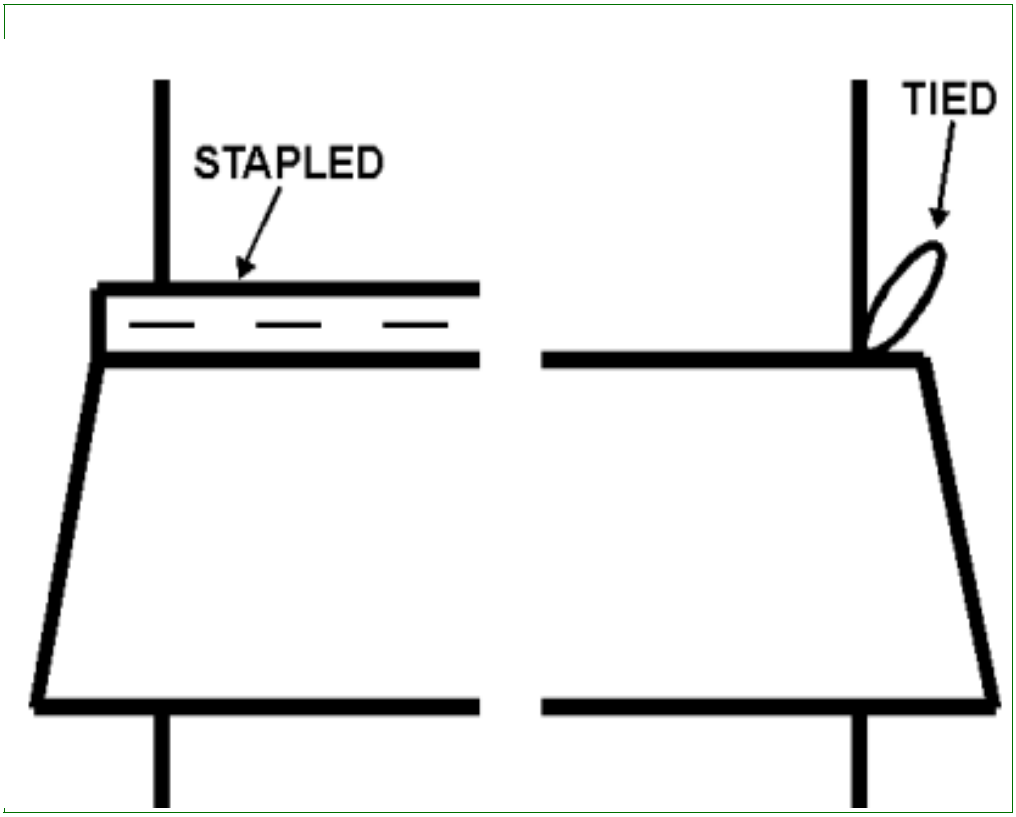

Figure 4-1 Example of a Larval Trap on a Host Tree

How to Trap Larvae

Place traps by stapling (or tying) at chest height the upper corners of pieces of tar paper or burlap to host trees to form a skirt. The burlap or tar paper should be at least nine inches wide and long enough to go around the trunk of the tree. Ensure the burlap or tar paper completely encircles the tree trunk, but remains loose fitting. If white oak is present, use this tree for larval trapping.

Place the larval traps on the trunk of a tree shortly before egg hatch is predicted.

After larvae emerge, check under the burlap or tar paper for larvae and pupae. Larval traps should be checked two or three times a week. Larvae should be collected, identified, counted, and recorded by tree site.

For best results, check during daylight hours (preferably between 10 a.m. and 3 p.m.) on hot, sunny days.

The larval traps should also be checked after the larval period because the larvae often pupate under the covering of the larval trap.

Chapter 5

Preparing Specimens for Identification

Contents

Introduction **5-1**
Mailing Instructions for Specimens **5-1**
- Materials Needed **5-1**
- Adults from Traps **5-2**
- All Other Life Stages **5-2**

Completing PPQ Form 391, Specimens for Determination **5-4**
Distributing the PPQ Form 391 **5-5**

Introduction

This section contains instructions for preparing and sending gypsy moth specimens.

NOTICE

If no one in a work station has authority to identify gypsy moth, the specimens must be sent to the Area Identifier for confirmation.

Mailing Instructions for Specimens

Materials Needed

To preserve, record, and distribute specimens, have the following materials readily available:

- Approved killing agents
- *ARS-748 (Identification Request)* on page 5-3 or *PPQ Form 391 (Specimens for Determination)* on page 5-4
- Pill boxes
- Shipping boxes or mailing tubes (envelopes)
- Vials for instars in ethyl alcohol

Adults from Traps

Use the following procedure when a suspected gypsy moth is found in a delta or a milk-carton trap.

1. Remove the whole trap without disturbing the moth.
2. Disassemble the trap and cut out the trap section containing the suspected gypsy moth.
3. Place the cut-out trap section in a pill box.
4. Send the pill box and a completed PPQ Form 391 (Specimens for Determination) to the appropriate Area Identifier.

As an alternative, replace the trap; send the assembled trap with the specimen and a completed *ARS-748 (Identification Request)* on page 5-3 or *PPQ Form 391 (Specimens for Determination)* on page 5-4 to the appropriate Area Identifier.

All Other Life Stages

1. If the larvae are to be sent, boil the larvae in water before placing them in 70 percent ethyl alcohol. If pupae or egg masses are to be sent, place directly in 70 percent ethyl alcohol without boiling.
2. Using a soft lead pencil, write the collection number on bond paper and place the marked paper in the vial with the specimen.
3. Send each vial containing specimens with a completed *PPQ Form 391 (Specimens for Determination)* on page 5-4or *ARS-748 (Identification Request)* on page 5-3 to the Area Identifier.

U.S. DEPARTMENT OF AGRICULTURE
AGRICULTURAL RESEARCH SERVICE—PLANT SCIENCES INSTITUTE
SYSTEMATIC ENTOMOLOGY LABORATORY-TAXONOMIC SERVICES UNIT

IDENTIFICATION REQUEST

TSU LOT NO.	TSU PRIORITY
DATE	Sender's Reference No.
DATE IDENTIFICATION REQUIRED *(month, day, year)* if less than two months, explain below.	
TOTAL NUMBER SENT Pinned: Vials: Slides: Other:	

NOTE:
- Please *type* all information.
- Do not write in shaded areas.
- Give explanations where requested in "Remarks" section at bottom of form.
- Attach additional pages if (and only if) more space is needed.

NAME & COMPLETE MAILING ADDRESS OF SENDER *(Include Zip Code)*

RETURN TO *(If other than sender) (Include Zip Code)*

SOURCE

AR ☐ ARS
AP
AQ ☐ APHIS-PPQ
FS ☐ FS
DD ☐ U.S. Military
OF ☐ Other Federal
SA ☐ State Agricultural Agency
SU ☐ State University
OS ☐ Other State
PU ☐ Private University
IN ☐ Individual
CO ☐ Commercial Organization
FN ☐ Non-U.S.
CI ☐ CICP

LEVEL/TYPE OF IDENTIFICATION NEEDED

☐ Family ☐ Genus ☐ Species

☐ Positive or negative verification of ecological group:

☐ phytophagous ☐ parasitic ☐ predaceous

☐ saprophagous ☐ aphidophagous ☐ other:

OTHER INFORMATION REQUESTED—Will be supplied as conditions allow, as determined by taxonomist. Note reasons information is needed.

SOURCE OF PROJECT SUPPORT

☐ ARS ☐ APHIS ☐ FS ☐ CSRS Regional project no:
☐ Hatch ☐ EPA ☐ DOI ☐ NIH ☐ NSF ☐ FAO
☐ USAID ☐ Other *(Specify)*

REASON FOR IDENTIFICATION *(Check and complete as appropriate)*

a Biological control
- **1** ☐ Scientific name of target pest;
- **2** ☐ General quarantine or biocontrol research
- **3** ☐ Identity of host of natural enemy
- **4** ☐ Recovery of released natural ememy
- **5** ☐ Suspected contaminant in culture
- **6** ☐ Quarantine reference collection
- **7** ☐ Voucher specimen of field release
- **8** ☐ Holding living material pending identification

b ☐ Damaging crop, plants—*identify host plants:*

c ☐ Suspected pest of regulatory concern—*give details below*
d ☐ Stored product pest—*commodity affected:*

e ☐ Livestock, wildlife, or domestic animal pest—*host:*
f ☐ Danger to human health
g ☐ Household pest—*damage:*
h ☐ Possible immigrant—*new to:*
i ☐ Reference collection—*for:*
j ☐ Survey—*explain in detail below*
k ☐ Thesis problem—*describe project below* ☐ M.S. ☐ Ph.D.
l ☐ Other—*explain below*

SPECIMENT DISPOSITION—See Instruction Sheet. If you wish specimens returned, please provide justification below. Duplicate specimens encouraged—see instruction sheet.
☐ Return ☐ Keep or discard

FTS2000, ASRR, INTERNET or BITNET USER ID: *or* FAX # (including area code):

TELEPHONE REPORT REQUESTED
If yes, give number—include area code and extension. Requests are handled at the discretion of SEL, TSU

DESCRIPTION OF PROJECT—Include Project Title and name of Project Leader. **(Reference previous communications pertaining to this submittal)**

REMARKS *(Explanations, tentative identification, etc.)*

FOR TSU USE
DATE RECEIVED
NO.
LABEL
SORTED
PREPARED

Figure 5-1 ARS-748 (Identification Request)

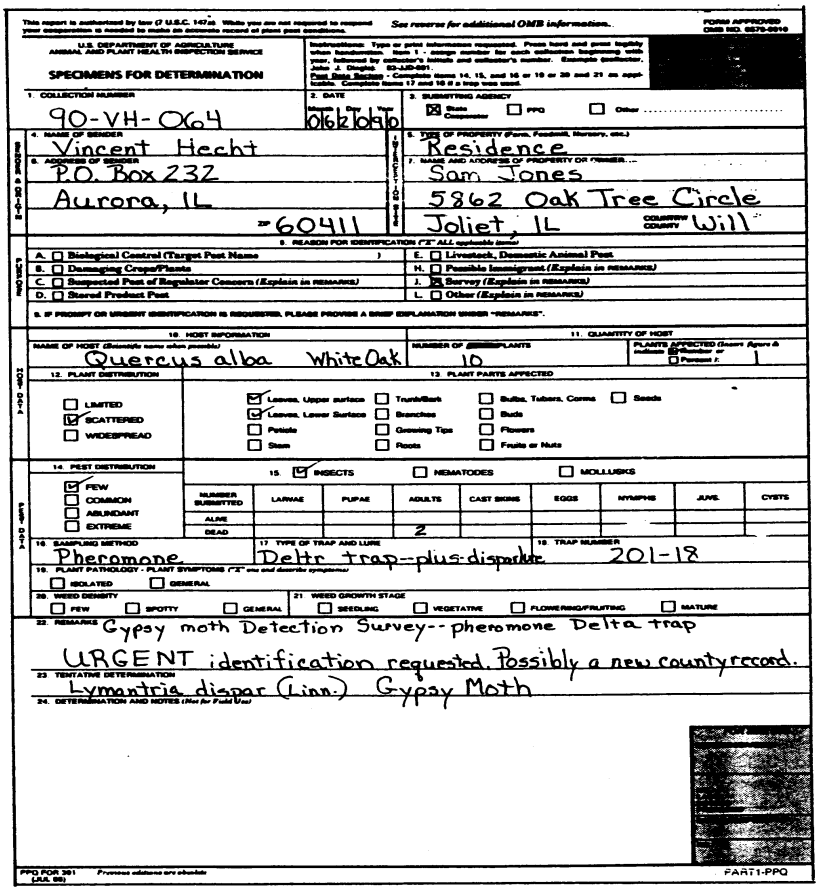

This report is authorized by law (7 U.S.C. 147a). While you are not required to respond, your cooperation is needed to make an accurate record of plant pest conditions. See reverse for additional OMB information. FORM APPROVED OMB NO. 0579-0010

U.S. DEPARTMENT OF AGRICULTURE
ANIMAL AND PLANT HEALTH INSPECTION SERVICE

SPECIMENS FOR DETERMINATION

Instructions: Type or print information requested. Press hard and print legibly when handwritten. Item 1 - assign number for each collection beginning with year, followed by collector's initials and collector's number. Example (collector, John J. Doe): 02-JJD-001.
Pest Data Review - Complete items 14, 15, and 16 or 19 or 20 and 21 as applicable. Complete items 17 and 18 if a trap was used.

1. COLLECTION NUMBER: 90-VH-064
2. DATE (Month Day Year): 06 06 1990
3. SUBMITTING AGENCY: [X] State Cooperator [ ] PPQ [ ] Other .....

SENDER DATA
4. NAME OF SENDER: Vincent Hecht
5. ADDRESS OF SENDER: P.O. Box 232, Aurora, IL 60411

PROPERTY DATA
6. TYPE OF PROPERTY (Farm, Feedlot, Nursery, etc.): Residence
7. NAME AND ADDRESS OF PROPERTY OR OWNER: Sam Jones, 5862 Oak Tree Circle, Joliet, IL
COUNTRY/COUNTY: Will

REASON FOR IDENTIFICATION ("X" ALL applicable items)
A. [ ] Biological Control (Target Pest Name)
B. [ ] Damaging Crops/Plants
C. [ ] Suspected Pest of Regulator Concern (Explain in REMARKS)
D. [ ] Stored Product Pest
E. [ ] Livestock, Domestic Animal Pest
H. [ ] Possible Immigrant (Explain in REMARKS)
J. [X] Survey (Explain in REMARKS)
L. [ ] Other (Explain in REMARKS)

9. IF PROMPT OR URGENT IDENTIFICATION IS REQUESTED, PLEASE PROVIDE A BRIEF EXPLANATION UNDER "REMARKS".

HOST DATA
10. HOST INFORMATION — NAME OF HOST (Scientific name when possible): Quercus alba White Oak
11. QUANTITY OF HOST — NUMBER OF PLANTS: 10 — PLANTS AFFECTED (Insert figure in indicated [X] Number or [ ] Percent): 1
12. PLANT DISTRIBUTION: [ ] LIMITED [X] SCATTERED [ ] WIDESPREAD
13. PLANT PARTS AFFECTED: [X] Leaves, Upper surface [X] Leaves, Lower Surface [ ] Petiole [ ] Stem [ ] Trunk/Bark [ ] Branches [ ] Growing Tips [ ] Roots [ ] Bulbs, Tubers, Corms [ ] Buds [ ] Flowers [ ] Fruits or Nuts [ ] Seeds

PEST DATA
14. PEST DISTRIBUTION: [X] FEW [ ] COMMON [ ] ABUNDANT [ ] EXTREME
15. [X] INSECTS [ ] NEMATODES [ ] MOLLUSKS

NUMBER SUBMITTED	LARVAE	PUPAE	ADULTS	CAST SKINS	EGGS	NYMPHS	JUVE.	CYSTS
ALIVE								
DEAD			2					

16. SAMPLING METHOD: Pheromone
17. TYPE OF TRAP AND LURE: Deltr trap--plus dispatlure
18. TRAP NUMBER: 201-18
19. PLANT PATHOLOGY - PLANT SYMPTOMS ("X" one and describe symptoms): [ ] ISOLATED [ ] GENERAL
20. WEED DENSITY: [ ] FEW [ ] SPOTTY [ ] GENERAL
21. WEED GROWTH STAGE: [ ] SEEDLING [ ] VEGETATIVE [ ] FLOWERING/FRUITING [ ] MATURE

22. REMARKS: Gypsy moth Detection Survey--pheromone Delta trap
URGENT identification requested. Possibly a new county record.
23. TENTATIVE DETERMINATION: Lymantria dispar (Linn.) Gypsy Moth
24. DETERMINATION AND NOTES (Not for Field Use)

PPQ FOR 391 (JUL 00) Previous editions are obsolete — PART1-PPQ

Figure 5-2 PPQ Form 391 (Specimens for Determination)

Completing PPQ Form 391, Specimens for Determination

Information on how to complete each block follows.

Block 1—Fill in a unique identification number beginning with the last two digits of the year, followed by the collector's initial, followed by the collector's number.

For example, 08-JD-001

(last two digits of 2008, collector John Doe, collector number 001).

Blocks 2-14—Fill in as appropriate.

Block 15—Indicate number of specimens submitted and their condition when collected (alive or dead) under the appropriate life stage heading.

Block 16—Enter any of the following: pheromone trap, larval trap, or visual search.

Block 17—If sampling involved trapping, list the specific type of trap and lure used, e.g., Delta Trap, Disparlure.

Block 18—Fill in.

Blocks 19-21—Leave blank.

Block 22—Fill in the type of survey conducted: detection, delimiting, egg-mass, larval Trapping. Also, if this specimen is a New County Record or a New State Record, write the word "URGENT" and handle as directed in M390.516.

Block 23—Enter tentative identification for gypsy moth: *Lymantria dispar.*

Block 24—Leave blank.

Distributing the PPQ Form 391

Distribute the PPQ Form 391 as follows:

1. Send the original and four copies with the sample to the Area Identifier.
2. Retain the yellow copy in the files of the work station.

Chapter 6

Regulatory Section Introduction

Contents

Purpose of Regulatory Activities **6-1**
Regulatory Methods **6-1**
- Regulated Articles **6-1**
- Regulatory Factors **6-2**
- Movement from Hazardous Sites **6-2**
- Numbers of Regulated Articles Shipped **6-2**
- Personnel Available **6-2**
- Documentation **6-3**

Public Relations **6-3**
Review of Subsections **6-4**

Purpose of Regulatory Activities

The purpose of regulatory activities is to prevent the artificial spread (spread caused by human activity) of the gypsy moth from quarantine areas to noninfested areas. See Areas Quarantined in the United States for Gypsy Moth for county-by-county listings.

Regulatory Methods

Preventing the artificial spread of gypsy moth is accomplished by inspecting and treating, if necessary, Regulated Articles (defined below). Regulated Articles may be infested by any life stage of the gypsy moth—egg masses, larvae, pupae, and/or adult.

Regulated Articles

The following regulated articles require inspection and certification:

- Christmas trees
- Logs, posts, pulpwood, bark, and bark products
- Mobile homes and associated items

- Nursery stock
- Outdoor Household Articles (OHAs)

Through inspection and treatment of Regulated Articles, the risk of transporting gypsy moth to noninfested areas is minimized.

Regulatory Factors

Regulatory factors will vary depending on the following:

- Documentation required
- Movement of Regulated Articles from hazardous sites
- Personnel available for inspections
- Public relations activities
- Treatments available for the Regulated Articles
- Types of Regulated Articles and quantity in the shipment

Movement from Hazardous Sites

The movement of Regulated Articles from hazardous sites (sites where gypsy moth is present either on the Regulated Articles or in the vicinity) is a high-risk activity. Nevertheless, an establishment may move Regulated Articles from a hazardous site, if the establishment meets certain conditions.

Numbers of Regulated Articles Shipped

The quantity of Regulated Articles to be shipped will affect regulatory activities. If establishments regularly ship large quantities of Regulated Articles outside the quarantine area, the establishments must operate under a Compliance Agreement (CA). If establishments infrequently ship Regulated Articles from a quarantine area, PPQ and/or State personnel will inspect and certify individual shipments. Therefore, this section provides information on CAs by referring to Compliance Agreements (CAs) on page E-1 which contains sample CAs for various establishments.

Personnel Available

The personnel available will affect regulatory activities. Because of limited PPQ resources, the following individuals, if authorized, may inspect, treat, and certify Regulated Articles:

- Employees of establishments under CAs
- PPQ officers
- Private citizens
- Qualified Certified Applicators (QCAs)
- State personnel (State plant regulatory personnel)

PPQ officers will still inspect Regulated Articles, especially those shipped by individuals and those shipped infrequently. However, many inspections will be done by: 1) State personnel; 2) private citizens inspecting OHAs; 3) employees of establishments operating under CAs; and 4) QCAs, pesticide applicators certified to inspect OHAs and mobile homes.

All inspectors—whether PPQ officers, State personnel, QCAs, or employees of establishments under CAs—must follow the instructions in this manual to permit the movement of Regulated Articles.

Documentation

The movement of Regulated Articles from a quarantine area into or through a noninfested area will require documentation by one of the following:

- PPQ Form 527 (Sticky Back Certificate) (for nursery stock)
- PPQ Form 530 (Limited Permit)
- PPQ Form 540 (Certificate)
- Qualified Certified Applicator (QCA) Document on page P-1
- Rubber Stamp Certificate (for nursery stock)
- Self-Inspection Checklist, from "It's the Law: Before Moving, Check for the Gypsy Moth," Program Aid No. 2147 (for OHAs)
- Signed Accurate Statement on page M-1 (for logs, pulpwood, and wood chips)

Public Relations

Public and industry compliance with the gypsy moth regulations is based on: 1) awareness of the existence of the regulations; 2) knowledge about the contents of the regulations; and 3) voluntary cooperation with the regulations.

To have a successful regulatory program, PPQ officers, State personnel, and/or other cooperators must inform the public and industry of: 1) the gypsy moth regulations; and 2) ways to comply with the gypsy moth regulations. PPQ officers, State personnel, and other cooperators will provide the public with information on the gypsy moth regulations through the following:

- Contact with the media—radio, television, and newspapers
- Distribution of other information, such as a map illustrating the European Gypsy Moth (*Lymantria dispar*) North America quarantine
- Publication distribution, such as "It's the Law: Before Moving, Check for the Gypsy Moth," Program Aid No. 2147
- Personal contact with establishments handling Regulated Articles

Contact with establishments must cover all potential means for moving gypsy moth. The following are some, but not all, of the establishments that must be contacted:

- Campgrounds
- Christmas tree plantations
- Independent loggers
- Logging and pulpwood companies
- Lumber mills
- Mobile home parks
- Moving companies and independent movers
- Nurseries
- Nursery stock brokers
- Truck and trailer rental companies

Review of Subsections

The following subsections in this manual will help to explain regulatory procedures to cooperators, private industry, and the public. See Appendix D for information about recording compliance agreements and compliance inspections in IPHIS.

- Contents on page 7-1
  - Pesticide certification
  - Safety
  - Treatments for egg masses
  - Treatments for larvae
- Hazardous Sites on page 8-1
  - Hazardous sites definition
  - Movement of Regulated Articles from hazardous sites
  - Inspection of hazardous sites
  - Inspection results
  - Treatment of hazardous site
  - Documentation
- Logs, Posts, Pulpwood, Bark, and Bark Products on page 9-1
  - Lists of commercial products

- Operation under compliance agreements (CAs)
- Inspection procedures for logs
- “Laid out” method of inspection
- Time of inspection
- Shipment under CAs
- Receiving mills under CAs
- Inspection procedures for pulpwood and bark
- Treatments
- Hazardous site classification
- Documentation
- Signed “Accurate Statement”

◆ Nursery Stock on page 10-1

- Purpose of nursery stock section
- Operation under compliance agreements
- Procedures for small lots
- Procedures for large lots
- Nurseries and Christmas tree farms as hazardous sites
- Spray treatments for large lots
- Fumigation for large lots

◆ Christmas Trees from Canada on page 11-1

◆ Qualified Certified Applicators (QCAs) on page 12-1

- Definition of QCAs
- Qualifications of QCAs
- Training of QCAs
- Authorization under compliance agreements (CAs)
- Substandard performance

◆ Outdoor Household Articles (OHAs) on page 13-1

- Definition of Outdoor Household Articles (OHAs)
- Monitoring the shipment of OHAs
- Self-Inspection by homeowners or renters
- Inspection by QCAs under compliance agreements (CAs)
- Preinspection procedure
- Inspection procedure

- Treatments
- Documentation for the OHA inspections

◆ Mobile Homes and Associated Items on page 14-1

- Regulation and mobile homes
- Preparation for the regulation of mobile homes
- Preinspection procedure
- Safety and inspections
- Inspection procedure
- Treatments
- Documents for mobile home inspections
- Use of the documents for mobile home inspections

Chapter 7

Treatments

Contents

Pesticide Certification **7-1**
Safety **7-1**
Treatments for Egg Masses **7-2**
- Fumigation **7-2**
- Physical Removal After Spraying **7-2**
- Physical Removal (Only on OHAs) **7-3**

Treatments for Larvae **7-3**
- Ground Treatments for Larvae **7-3**
- Aerial Treatments for Larvae **7-3**
- When to Treat Larvae **7-3**

Pesticide Certification

It is PPQ policy that all PPQ officers and QCAs who apply pesticides must be certified as pesticide applicators. In addition to all the treatments in the *Gypsy Moth Program Manual*, all PPQ officers must be familiar with the following.

- *Aerial Application Manual*
- *PPQ Treatment Manual*
- *Standard Pesticide Users Guide* (Bert L. Bohmont)

Only the treatments listed in this manual and the *PPQ Treatment Manual* are to be used for regulatory treatments.

Safety

All pesticides must be handled safely. Safety precautions are on the labels for the pesticides. Additional information on the safe handling of pesticides is in the *Introduction* on page 1-1 and the *Control Section Introduction* on page 15-1. *Insecticide Labels and MSDSs* on page F-1 is of particular importance because all cautions and application information stated on the labels and in the MSDSs are incorporated into this manual by reference. *Methods for Gypsy Moth Eradication* on page G-1 is also of particular importance.

Treatments for Egg Masses

Approved treatments for gypsy moth egg masses are as follows:

- Fumigation
- Physical removal after spraying
- Physical removal (only on OHAs)

Fumigation

Methyl bromide (MB) fumigation is approved for use on egg masses. Fumigate only when temperatures are above 40 °F. See the PPQ *Treatment Manual* for procedural instructions on conducting MB fumigations.

Refer to *PPQ Treatment Manual* for a list of the materials needed for a MB fumigation.

Nursery Stock on page 10-1 contains the Treatment Schedules for nursery stock and cut Christmas trees.

Methyl Bromide (MB) at NAP (Chamber or Tarpaulin)

Table 7-1 MB Treatment Schedule at NAP (In chamber or under a tarpaulin) for egg masses of Lymantria dispar (gypsy moth) on such items as outdoor household articles (OHAs), quarry products, lumber, logs, and timber products

Temperature	Dosage Rate (lb/1000 ft^3)	Minimum Concentration Readings (oz.) At:				
		0.5 hr	4 hrs	8 hrs	12 hrs	16 hrs
50°F or above	3.5 lbs	2.25 lbs	28			
	2.5 lbs	30	20	14		
	2 lbs	24	16	12	12	10
40-49°F	4.5 lbs	54	36			
	3.25 lbs	38	26	18		
	2.25 lbs	30	20	14	14	12

Apply Golden Natur'l Spray Oil to an egg mass, using: 1) a sprayer with an adjustable nozzle; 2) a paint brush; or 3) a similar brush. Thoroughly saturate the egg masses to the point of runoff so the egg mass is "soaked." The Golden Natur'l Spray Oil will penetrate rapidly destroying even the innermost eggs.

Physical Removal After Spraying

After applying Golden Natur'l Spray Oil to an egg mass, remove the egg mass by using a wire brush or paint scraper. Be sure to vigorously brush or scrape all of the egg mass from the surface.

Golden Natur'l Spray Oil is available from Stoller Enterprises, Inc.

Stoller Enterprises, Inc.
8582 Katy Freeway
Houston, TX 77024
(713) 464-5580

Physical Removal (Only on OHAs)

Use a wire brush or paint scraper to remove an egg mass from an OHA. Be sure to brush or scrape vigorously to remove all of the egg mass; however, do not brush or scrape so vigorously that the OHA is damaged.

Treatments for Larvae

Ground Treatments for Larvae

Ground treatments for gypsy moth larvae can be applied by: 1) mist blower; or 2) hydraulic sprayer.

See Insecticide Labels and MSDSs on page F-1 for information on insecticide treatments from the ground.

Aerial Treatments for Larvae

See the following appendixes for information on aerial application of insecticides:

- *Insecticide Labels and MSDSs* on page F-1
- *Methods for Gypsy Moth Eradication* on page G-1
- *Guidelines for Environmental Documents* on page H-1
- *Public Meetings/Public Relations* on page I-1
- *Checking and Calibrating Aircraft* on page J-1
- *Nozzles and Pressures* on page K-1

When to Treat Larvae

Apply the insecticide after general egg hatch is completed in the area.

Apply the insecticide when first, second, and third instar larvae are present. Proper timing of the application is essential. Insecticide effectiveness is reduced when the larvae are beyond the third instar. The normal larval period is

from about April 15 to June 15—a few days earlier in southern sections of the quarantine area and a few days later in more northern sections.

NOTICE

When nursery stock is to be moved, apply the insecticide as instructed on previous page and, if possible, immediately before movement.

Chapter 8

Hazardous Sites

Contents

Hazardous Site Definition **8-1**
Movement of Regulated Articles from Hazardous Sites **8-1**
Inspection of Hazardous Sites **8-2**
Time of Inspection **8-2**
Method of Inspection **8-2**
Inspection Results **8-2**
Treatment of Hazardous Sites **8-3**
When to Treat **8-3**
Treating the Hazardous Site **8-3**
Documentation **8-4**

Hazardous Site Definition

A hazardous site is a site where the gypsy moth is present on the premises, on Regulated Articles, and/or in the surrounding area. Hazardous sites are likely to provide a pathway for artificial spread to noninfested areas.

Hazardous sites include, but are not limited to, the following sites from which regulated articles are moved.

- Christmas tree plantations
- Log, pulpwood, and wood chip mills and associated yards
- Logging sites
- Military bases (due to infested vehicles and cargo)
- Mobile home parks
- Nurseries
- Recreational areas

Movement of Regulated Articles from Hazardous Sites

PPQ officers or State personnel will usually inspect hazardous sites under compliance agreements (CAs). Typical CAs for hazardous sites are in *Compliance Agreements (CAs)* on page E-1.

Regulated Articles can be moved from a hazardous site under a CA without inspection of individual shipments when either of the following occur:

1. The hazardous site is inspected and found NOT to be a potential pathway for the artificial spread of the gypsy moth (no gypsy moth infestations found); or
2. The hazardous site is inspected and found to be a potential pathway for the artificial spread of the gypsy moth (an infestation found), and treated with an approved insecticide to eliminate the risk.

Inspection and treatment are discussed in detail in the following section.

Inspection of Hazardous Sites

Time of Inspection

Inspections occur after leaf fall, because egg masses are no longer hidden by the leaves.

Inspections often occur during and after blow-in (usually the months of April through June) to detect larvae.

For regulatory purposes, inspections can occur anytime during the shipping season.

To determine if multiple inspections are necessary, inspectors will rely on their knowledge of:(1) current population densities in the immediate area; 2) previous history of the hazardous site; and 3) the results of a current inspection of the hazardous site.

Method of Inspection

When inspecting hazardous sites, inspect the premises, all Regulated Articles, and all preferred hosts in the surrounding area for signs of gypsy moth.

Inspection Results

Inspectors will use their judgment and the following criteria to determine if conditions favor the artificial spread of gypsy moth.

1. One egg mass (or more) found on the Regulated Articles or within 3 meters (10 feet) of the articles.
2. Twelve or more egg masses per hectare (5 per acre) are found within approximately 30 meters (100 feet) of the articles.

3. Heavy larval infestations found within 1,600 meters (1 mile) which could result in infestation through blow-in or larval migration into the site.

When any of the above conditions (or similar threatening conditions) exist, a PPQ officer can issue an *Emergency Action Notification (EAN) PPQ Form 523* on page Q-1. The EAN will state the required action(s) that must be performed to allow shipment. See the PPQ Treatment Manual for more information on the EAN.

Treatment of Hazardous Sites

Insecticide applications to hazardous sites may be either: 1) aerial applications; or 2) ground applications by hydraulic sprayers or mist blowers.

Aerial applications are usually preferred to ground applications. Aerial applications give better insecticidal coverage to the forest canopy and surrounding areas. Aerial applications are usually used to treat in or near the following hazardous sites: recreational areas; mills; nurseries; and Christmas tree plantations.

Ground application using a hydraulic sprayer is the preferred method for treating mobile home parks or isolated areas in nurseries.

When to Treat

Apply the insecticide when general egg hatch is completed in the area. Make applications when first, second, and third instar larvae are present. Proper timing of the treatment is essential. Pesticide effectiveness is reduced when the larvae are beyond the third instar. Insecticide application for larvae is most effective from about May 1 to June 15—a few weeks earlier in southern sections of the quarantine area. Best results are obtained if application can be delayed until general foliage of preferred hosts is one–third to one–half grown. If possible, apply treatments immediately before movement of Regulated Articles.

Treating the Hazardous Site

Treat the infested portion of the hazardous site. Treat the surrounding area to a depth equal to the effective range of the spray equipment in use. A minimum depth of 70 feet will usually suffice to keep migrating late instar larvae from reinfesting the site. If reinfestation does occur, additional treatments will be necessary. In heavily infested sites, 2 or 3 applications 7 to 10 days apart may be necessary.

Documentation

After a hazardous site treatment, a PPQ officer will determine the effectiveness of the treatment. If the treatment was (and is) effective, the PPQ officer will note the action taken on the EAN and then rescind the EAN.

Chapter 9

Logs, Posts, Pulpwood, Bark, and Bark Products

Contents

List of Commercial Products **9-1**
Operation under Compliance Agreements **9-2**
Inspection Procedure for Logs **9-2**
The "Laid Out" Method of Inspection **9-3**
Time of Inspection **9-3**
Shipment Under Compliance Agreements **9-4**
Receiving Mills Under Compliance Agreements **9-4**
Inspection Procedures for Pulpwood and Bark **9-4**
- Inspection Procedures **9-4**
- Fumigation **9-4**
- Movement to Receiving Mills **9-4**

Treatments **9-5**
Hazardous Site Classification **9-5**
Documentation **9-6**
Signed Accurate Statement **9-6**

List of Commercial Products

At establishments operating under Compliance Agreements (CAs), employees of the establishments may inspect and certify the following commercial products.

- Bark and bark products
- Logs (includes logs for veneer, saw timber, etc.)
- Posts
- Pulpwood (includes bolts, edgings, trimmings, slabs, etc.)
- Other forest products

Alone or together, APHIS and State personnel will monitor the CAs.

Operation under Compliance Agreements

Employees will only be able to inspect and certify when their establishment is under a CA and when the employees have successfully completed training. Examples of CAs are in *Compliance Agreements (CAs)* on page E-1.

PPQ officers and/or State personnel will train the employees of the cooperating establishments.

Operating under CAs after successfully completing training, employees will be able to do the following.

- Complete the appropriate documents
- Inspect logs according to a standardized procedure
- Ship pulpwood and bark products according to a standardized procedure
- Treat, if necessary, in a safe and effective manner

On an as-needed basis, PPQ officers and/or State personnel will monitor the employees of the cooperating establishments to ensure compliance.

Inspection Procedure for Logs

NOTICE

If inspections are not practical because of costs or some other factor, logs can be debarked to remove all the life stages.

Log inspectors (whether PPQ officers, State personnel, or employees of cooperating establishments) will examine all the surface area—100 percent inspection—of each log in the shipment.

During the piece-by-piece inspection, inspectors will examine all exposed surfaces and crevices for egg masses, larvae, and pupae. If any life stage of gypsy moth is present, inspectors will apply, before shipment, a suitable treatment listed in the section on *Treatments* on page 7-1.

The “laid out” method allows examination of the entire surface area of all the logs.

WARNING

Log inspection involves work in a log-handling yard, so obey the following safety precautions.
–Always wear a hardhat and steel-toe workboots
–Always listen and watch for yard equipment
–Because log stacks are often unstable, never go on or near log stacks

The “Laid Out” Method of Inspection

Using this method, inspectors will examine the logs when the logs are “laid out,” i.e., the logs will be arranged in parallel rows with three to four feet between the rows.

The procedure for a “laid out” inspection follows.

1. Plan in advance to have the logs “laid out” and personnel and equipment on hand to turn the logs.
2. Walk between the rows examining the upper surface of logs in the near row and the side surface of logs in the next row. If eggs masses are found, spray with Golden Natur'l Spray Oil and remove. If larvae or pupae are found, remove the larvae and pupae.
3. Have the logs turned, so that the upper surface becomes the bottom.
4. Repeat Step 2 and examine (and treat if necessary) the surfaces that were not previously examined.
5. Safeguard the logs: 1) by arranging immediate shipment by shippers under CA; or 2) by storing under cover followed by shipment by shippers under CA.
6. Document the inspection.

Logs may be moved when: 1) the entire surface area is inspected; and 2) the logs are either free of life stages or treated to eliminate the life stages.

Time of Inspection

During the five months from April through August, inspection and treatment, if necessary, must be done no more than five days prior to shipment, preferably on the shipping day. If the inspected logs are not shipped immediately, the establishment must safeguard the logs to prevent infestation or reinfestation of the logs. The establishment can safeguard the logs by storage in closed containers or by storage at least one-hundred feet from vegetation.

During the seven months from September through March, inspection and treatment, if necessary, must be done fourteen days or less prior to shipment, provided the logs are shipped before April.

Shipment Under Compliance Agreements

Shippers under CAs will be able to move logs; the criteria in the CAs will regulate the shipping practices. *Compliance Agreements (CAs)* on page E-1 contains an example of a CA for shippers.

Receiving Mills Under Compliance Agreements

Receiving mills in noninfested areas will be able to receive logs if the receiving mills are under CAs regulating handling practices; in addition, the receiving mills must accept logs only from loggers under CAs and shippers under CAs. *Compliance Agreements (CAs)* on page E-1 contains an example of a CA for a receiving mill.

Inspection Procedures for Pulpwood and Bark

Inspection Procedures

Inspectors (whether PPQ officers, State personnel, or employees of cooperating establishments) will not be able to examine the entire surface area of the shipment.

Pulpwood and bark may be moved if: 1) fumigated; or 2) moved to receiving mills under CAs by shippers under CAs.

Fumigation

See Treatments on page 7-1 or the PPQ *Treatment Manual*.

Movement to Receiving Mills

Movement of pulpwood and bark from a quarantine area to a noninfested area involves special handling by: 1) employees at the sending site; 2) employees of the shipping companies; and 3) employees at the receiving mill.

Employees at establishments shipping from a quarantine area must inspect the shipment to ensure the following.

- Only shippers who are under CAs will transport the regulated articles

- Shipments will leave the quarantine area covered during the blow-in season (April to August)
- Shipments will leave the quarantine area covered with complete documentation
- Shipments will only go to receiving mills under CAs when the receiving mills are in noninfested areas

Employees of shipping companies must inspect the shipment to ensure the following.

- Shipments, when originating in quarantine areas, will only go to receiving mills in noninfested areas when the receiving mills are under CAs
- Shipments will go under cover and without delay

Employees of the receiving mills under CAs must inspect to ensure the following.

- Shipments from quarantine areas will arrive from suppliers under CAs and with correct documentation
- Shipments from quarantine area will be processed immediately (preferably) or within five days during the five months from April through August
- Shipments will arrive under cover and without delay.

Treatments

Treatments are discussed in *Treatments* on page 7-1

Procedures for composting bark are in *Procedures for Composting Bark* on page L-1.

Hazardous Site Classification

Under the CAs, establishments that frequently ship logs, pulpwood, bark, or any forest producer out of a quarantine area will provide access to PPQ and/or State employees to examine the premises (including all Regulated Articles) and the surrounding areas.

Hazardous Sites on page 8-1 contains information on: 1) scouting the premises and the surrounding area of an establishment; and 2) classifying an establishment

Documentation

To ship logs, pulpwood, or bark, three types of documents are acceptable.

1. PPQ Form 540 (Certificate)—for use by PPQ officers and State personnel
2. PPQ Form 530 (Limited Permit)—for use by PPQ officers and State personnel
3. A signed *Accurate Statement* on page M-1—for use by inspectors employed by cooperating establishments

Signed Accurate Statement

Accurate Statement on page M-1 contains an Accurate Statement for logs and an Accurate Statement for pulpwood (or bark).

Chapter 10

Nursery Stock

Contents

Purpose of the Nursery Stock Section **10-1**
Operation Under Compliance Agreements **10-1**
Procedures for Small Lots **10-2**
Procedures for Large Lots **10-2**
Nurseries and Christmas Tree Farms as Hazardous Sites **10-2**
Spray Treatments for Large Lots **10-3**
Fumigation for Large Lots **10-3**

Purpose of the Nursery Stock Section

The procedures outlined below are used to certify: 1) trees and shrubs grown outdoors in a nursery; and 2) Christmas trees grown as "balled and burlapped" nursery stock.

NOTICE

"Trees and shrubs that have been continuously grown in a greenhouse under conditions where no gypsy moth infestation would be possible as determined by an inspector may be issued a certificate without piece-by-piece inspection." See 7 CFR 301.45-5(a) and (a) (4).

Operation Under Compliance Agreements

If operating under CAs, nurseries and Christmas trees plantations will be able to ship Regulated Articles into a noninfested area. An example of a CA for a nursery or Christmas tree plantation is in *Compliance Agreements (CAs)* on page E-1

Operating under CAs, workers at nurseries and Christmas tree plantations will do the following:

- Complete the appropriate documents
- Examine Regulated Articles according to a standardized procedure, if necessary
- Safeguard plants from reinfestation

- Treat in a safe and effective manner all plants to be shipped, if necessary
- Treat in a safe and effective manner the surrounding area, if necessary

On an as-needed basis, PPQ officers and/or State personnel will monitor the techniques, treatments, and documents of the cooperating establishments to ensure compliance.

Procedures for Small Lots

Small lots of regulated plants from a quarantine area must be inspected on a piece-by-piece basis by either: 1) workers at the establishments under PPQ direction; 2) PPQ officers; or 3) State personnel. For example, piece-by-piece inspection is used for assembly-yard inspection of articles such as collected native plant material.

During a piece-by-piece inspection, inspect all bark including the crevices where egg masses may be attached. When egg masses or larvae are found, treat either by: 1) physical removal after spraying with Golden Natur'l Spray Oil; or 2) insecticide application. The preferred treatment for egg masses will be physical removal after spraying with Golden Natur'l Spray Oil. (See the instructions *Treatments* on page 7-1).

Procedures for Large Lots

Large lots of regulated plants from a quarantine area are usually not inspected on a piece-by-piece basis. Large lots of regulated plants are treated by: 1) treating the nursery or Christmas tree plantation as a hazardous site; 2) spraying the regulated stock with an insecticide; or 3) fumigating the regulated stock.

Nurseries and Christmas Tree Farms as Hazardous Sites

If establishments frequently ship nursery-grown trees and shrubs or Christmas trees out of the quarantine area, the establishments will be treated as hazardous sites. See instructions on *Inspection of Hazardous Sites* on page 8-2 for: 1) inspecting premises and surrounding areas; and 2) certifying establishments with or without treatment.

Spray Treatments for Large Lots

For larvae on plants in large lots, the following insecticides and others are registered for spray treatments: acephate; carbaryl; diflubenzuron; phosmet; spinosad; and tebufenozide.

See *Insecticide Labels and MSDSs* on page F-1 for more information on these insecticides

Fumigation for Large Lots

See the PPQ Treatment Manual for procedural instructions on conducting methyl bromide (MB) fumigations.

WARNING

Some evergreen species, especially narrow-leafed evergreens and some azaleas, may be injured by MB fumigation. Plants in a dormant state are more tolerant to fumigation.

Trees and shrubs can be fumigated with MB at natural atmospheric pressure (NAP) using either a short or long exposure schedule. Do not use MB containing chloropicrin.

WARNING

APHIS will not be responsible for damage of any type that results from a fumigation or an attempted fumigation.

Table 10-1 MB Treatment Schedule (at NAP) for egg masses of Lymantria dispar (gypsy moth) on deciduous, dormant woody plants (except for broadleaved genera such as Azalea, Berberis, *Camellia, Ilex*, and *Photinia*)[1]

Temperature	Dosage Rate (lb/1,000 ft3)	Minimum Concentration Readings (oz.) At: All others
90-96°F	2 lbs	2 hrs
80-89°F	2.5 lbs	2 hrs
70-79°F	3 lbs	2 hrs
60-69°F	3 lbs	2.5 hrs
50-59°F	3 lbs	3 hrs
40-49°F	3 lbs	3.5 hrs

1 This table is similar to treatment T201-d-1 in the *Treatment Manual*

Table 10-2 MB Treatment Schedule (at NAP) for Egg masses of Lymantria dispar (gypsy moth) on Dormant Evergreens (Including Conifers) and Certain Broadleaved Genera such as *Azalea*, *Berberis, Camellia, Ilex*, and Photinia[1]

Temperature	Dosage Rate (lb/1,000 ft^3)	Minimum Concentration Readings (oz.) At:
90-96°F	1.5 lbs	2 hrs
80-89°F	2 lbs	2 hrs
70-79°F	2.5 lbs	2 hrs
60-69°F	2.5 lbs	2.5 hrs
50-59°F	2.5 lbs	3 hrs
40-49°F	2.5 lbs	3.5 hrs

1 This table is similar to treatment T201-b-1 in the *Treatment Manual*

Table 10-3 MB Treatment Schedule at NAP (Chamber or Tarpaulin) for Egg Masses of *Lymantria dispar* on Cut Conifer Christmas Trees [1]

Temperature	Dosage Rate (lb/1000 ft^3)	Minimum Concentration Readings (oz.) at:				
		0.5 hr	2.5 hrs	3 hrs	4 hrs	4.5 hrs
75°F or above	1.5 lbs	18	12	—	—	—
70-74°F	2 lbs	24	16	—	—	—
60-69°F	2.5 lbs	30	—	24	—	—

Table 10-3 MB Treatment Schedule at NAP (Chamber or Tarpaulin) for Egg Masses of *Lymantria dispar* on Cut Conifer Christmas Trees

Temperature	Dosage Rate (lb/1000 ft^3)	Minimum Concentration Readings (oz.) at:				
		0.5 hr	2.5 hrs	3 hrs	4 hrs	4.5 hrs
60-69°F	3 lbs	36	24	—	—	—
50-59°F	3 lbs	36	—	—	24	—
50-59°F	4 lbs	48	32	—	—	—
40-49°F	3.5 lbs	42	—	—	—	28
40-49°F	5 lbs	60	40	—	—	—

1 This table is similar to treatment T313-d-1 in the *Treatment Manual.*

NOTICE

ON PINE: If treating pine Christmas trees for both gypsy moth egg masses and the pine shoot beetle, use the schedule for the pine shoot beetle because it is more potent.

Chapter 11

Christmas Trees from Canada

Contents

Introduction **11-1**

Introduction

Christmas trees coming from Canada are conifers. The term “conifers” refers to cone-bearing trees. Common examples include pine, fir, spruce, hemlock, and Douglas fir.

Use the following decision tables to take the appropriate course of action.

Table 11-1 Cut Christmas Trees or Boughs

If from:	Then
The Province of Ontario or Quebec	GO to Table 11-2
The Province of British Columbia, New Brunswick, or Nova Scotia	GO to Table 11-5
A province **other than** Ontario, Quebec, British Columbia, New Brunswick, or Nova Scotia	GO to Table 11-8

Table 11-2 Cut Christmas Trees or Boughs from Ontario or Quebec

If:	Then:
A pine species (e.g., white pine, Scotch or Scots pine)	GO to Table 11-3
Not a pine species (e.g., fir, spruce, hemlock, Douglas fir)	GO to Table 11-4

Table 11-3 Cut PINE Christmas Trees or Branches from Ontario or Quebec

If destined to:	And:	Then:
CT, DE, DC, MD, MA, NH, NJ, NY, PA, RI, or VT	Accompanied by either of these documents: • A Canadian Phytosanitary Certificate with one of the following Additional Declarations (ADs): (1) "The trees were inspected and found free from Tomicus piniperda, pine shoot beetle." or (2) "The trees were grown in an area not known to be infested by Tomicus piniperda, pine shoot beetle." or (3) "The trees have been treated with methyl bromide to kill Tomicus piniperda, pine shoot beetle." The details of the treatment must be recorded in the treatment block. • A Canadian Certificate of Origin[1] stating, "The trees were grown in an area not known to be infested by pine shoot beetle." The certificates must also state the county or MRC[2], and province where the trees were grown.	RELEASE
	Lacks the documents described above	CONTACT PPQ
Other than a State listed above	Accompanied by a Canadian Phytosanitary Certificate with **one** of the following Additional Declarations (ADs): 1. "The trees were inspected and found free from Tomicus piniperda, pine shoot beetle." **or** 2. "The trees were grown in an area not known to be infested by Tomicus piniperda, pine shoot beetle." **or** 3. "The trees have been treated with methyl bromide to kill Tomicus piniperda, pine shoot beetle." The details of the treatment must be recorded in the treatment block.	RELEASE
	Lacks a Canadian Phytosanitary Certificate with one of the above ADs	CONTACT PPQ

1 The Certificate of Origin must be addressed to the Plant Protection Organization of the United States, and must contain the following statement: "The (items) described below are products of Canada, produced in the county of (name of county) in the province of (name of province) in an area where gypsy moth, Lymantria dispar, does not occur." The Certificate of Origin must also contain the following information:

Exporter's name
Exporter's address
Description of the product, including quantity, species, and common name
Exporter's identification number
Exporters must print their name and sign and date the Certificate of Origin

2 MRC = Municipalité régionale de comté. This is a level of local government in the province of Quebec.

Table 11-4 Cut Christmas Trees or Branches OTHER THAN PINE from Ontario or Quebec

If destined to:	And:	Then:
CT, DE, DC, MD, MA, NH, NJ, NY, PA, RI, or VT	→	RELEASE
Other than a state listed above	Accompanied by either of these documents: • A Canadian Phytosanitary Certificate with one of the following Additional Declarations (ADs): 1. "The trees were inspected and found free from Lymantria dispar, gypsy moth." or 2. "The trees have been treated with methyl bromide to kill Lymantria dispar, gypsy moth." The details of the treatment must be recorded in the treatment block. • A Canadian Certificate of Origin[1] The certificates must also state the county or MRC[2] and province where the trees were grown.	
	Lacks the documents described above	CONTACT PPQ

1 The Certificate of Origin must be addressed to the Plant Protection Organization of the United States, and must contain the following statement: "The (items) described below are products of Canada, produced in the county of (name of county) in the province of (name of province) in an area where gypsy moth, Lymantria dispar, does not occur." The Certificate of Origin must also contain the following information:
Exporter's name
Exporter's address
Description of the product, including quantity, species, and common nam
Exporter's identification number
Exporters must print their name and sign and date the Certificate of Origin

2 MRC = Municipalité régionale de comté. This is a level of local government in the province of Quebec.

Table 11-5 Cut Christmas Trees or Branches from British Columbia, New Brunswick, or Nova Scotia

If:	
A pine species (e.g., white pine, Scotch or Scots pine)	GO to Table 11-6
Not a pine species (e.g., fir, spruce, hemlock, Douglas fir)	GO to Table 11-7

Table 11-6 Cut PINE Christmas Trees or Branches from British Columbia, New Brunswick, or Nova Scotia

If destined to:	And:	Then:
CT, DE, DC, MD, MA, NH, NJ, NY, PA, RI, or VT	→	RELEASE
Other than a State listed above	Accompanied by either of these documents: • A Canadian Phytosanitary Certificate with one of the following Additional Declarations: 1. "The trees were inspected and found free from Lymantria dispar, gypsy moth." or 2. "The trees have been treated with methyl bromide to kill Lymantria dispar, gypsy moth." The details of the treatment must be recorded in the treatment block. • A Canadian Certificate of Origin [1] The certificates must also state the county and province where the trees were grown.	
	Lacks the documents described above	CONTACT PPQ

1 The Certificate of Origin must be addressed to the Plant Protection Organization of the United States, and must contain the following statement: "The (items) described below are products of Canada, produced in the county of (name of county) in the province of (name of province) in an area where gypsy moth, Lymantria dispar, does not occur." The Certificate of Origin must also contain the following information:
Exporter's name
Exporter's address
Description of the product, including quantity, species, and common name
Exporter's identification number
Exporters must print their name and sign and date the Certificate of Origin.

Table 11-7 Cut Christmas Trees or Branches OTHER THAN PINE from British Columbia, New Brunswick, or Nova Scotia

If destined to:	And:	Then:
CT, DE, DC, MD, MA, NH, NJ, NY, PA, RI, or VT	→	RELEASE
Other than a State listed above	Accompanied by either of these documents: • A Canadian Phytosanitary Certificate with one of the following Additional Declarations: 1. "The trees were inspected and found free from Lymantria dispar, gypsy moth." or 2. "The trees have been treated with methyl bromide to kill Lymantria dispar, gypsy moth." The details of the treatment must be recorded in the treatment block. • A Canadian Certificate of Origin[1] The certificates must also state the county and province where the trees were grown.	
	Lacks the documents described above	CONTACT PPQ

1 The Certificate of Origin must be addressed to the Plant Protection Organization of the United States, and must contain the following statement: "The (items) described below are products of Canada, produced in the county of (name of county) in the province of (name of province) in an area where gypsy moth, Lymantria dispar, does not occur." The Certificate of Origin must also contain the following information:
Exporter's name
Exporter's address
Description of the product, including quantity, species, and common name
Exporter's identification number
Exporters must print their name and sign and date the Certificate of Origin.

Table 11-8 Cut Christmas Trees or Branches from a Province OTHER THAN Ontario, Quebec, British Columbia, New Brunswick, or Nova Scotia

If:	Then:
Accompanied by either of these documents: • A Canadian Phytosanitary Certificate with the following Additional Declaration: "The trees were grown in an area not known to be infested by gypsy moth." • A Canadian Certificate of Origin [1] The certificates must also state the county and province where the trees were grown.	RELEASE
Lacks the documents described above	CONTACT PPQ

1 The Certificate of Origin must be addressed to the Plant Protection Organization of the United States, and must contain the following statement: “The (items) described below are products of Canada, produced in the county of (name of county) in the province of (name of province) in an area where gypsy moth, Lymantria dispar, does not occur.” The Certificate of Origin must also contain the following information:

Exporter’s name

Exporter’s address

Description of the product, including quantity, species, and common name

Exporter’s identification number

Exporters must print their name and sign and date the Certificate of Origin

Chapter 12

Qualified Certified Applicators (QCAs)

Contents

Definition of Qualified Certified Applicators (QCAs) **12-1**
Qualifications of QCAs **12-1**
Training QCAs **12-1**
Authorization Under Compliance Agreements **12-2**
Substandard Performance **12-2**

Definition of Qualified Certified Applicators (QCAs)

Qualified Certified Applicators (QCAs) are pesticide applicators certified by the USDA to inspect both Outdoor Household Articles (OHAs), which include recreational vehicles (RVs), and mobile homes.

Qualifications of QCAs

Each QCA must hold a valid pesticide applicator's license for each State in which the QCA works. If a State revokes the pesticide applicator's license of an individual, that individual cannot continue to be a QCA.

Training QCAs

QCAs will be trained by: 1) USDA personnel; 2) State personnel; or preferably 3) both USDA and State personnel. Licensing will always be the responsibility of the State agency that licenses pesticide applicators.

QCAs must be able to do the following:

- Complete and distribute the appropriate documents
- Inspect OHAs and mobile homes according to a standardized procedure
- Treat, if necessary, in a safe and effective manner.

Authorization Under Compliance Agreements

QCAs will work under Compliance Agreements (CAs). An example of a CA for a QCA can be located in *Compliance Agreements* on page E-1.

The PPQ Plant Health Director (PHD) in each State will be responsible for initiating and monitoring the certification of QCAs under CAs. In each State, the PPQ PHD will maintain a list of current QCAs.

Substandard Performance

If a QCA fails to perform inspections or treatments adequately, the PPQ PHD will revoke the CA and the authority of the QCA to inspect and certify OHAs and mobile homes.

Chapter 13

Outdoor Household Articles (OHAs)

Contents

Definition of Outdoor Household Articles (OHAs) **13-1**
Monitoring the Shipment of OHAs **13-1**
Self-Inspection by Homeowners or Renters **13-2**
Inspection by QCAs Under Compliance Agreements (CAs) **13-2**
Preinspection Procedure **13-3**
Inspection Procedure **13-4**
Treatments **13-5**
- Physical Removal of Egg Masses (Preferred for OHAs) **13-5**
- Physical Removal of Egg Masses after Spraying **13-5**
- Fumigation of Egg Masses **13-5**
- Spraying of Larvae **13-5**

Documentation for the OHA Inspections **13-6**

Definition of Outdoor Household Articles (OHAs)

Outdoor Household Articles (OHAs) include any article associated with a household that has been kept outside the home. OHAs include, but are not limited to, the following: outdoor furniture; firewood; barbecue grills; doghouses; boats; hauling trailers; garbage containers; bicycles; tires; garden tools; tents; awnings; and recreational vehicles (RVs).

Checklist for Outdoor Household Articles (OHAs) on page O-1 (and Program Aid Number 1329— “Don’t Move Gypsy Moth”) contains a list of OHAs that are often infested and must be inspected. However, any list is likely to be incomplete, because the gypsy moth females can lay their eggs on anything and the larvae of gypsy moth can rest or pupate on anything.

Monitoring the Shipment of OHAs

When OHAs are to be shipped from a quarantine area into or through a noninfested area, the OHAs must be treated as Regulated Articles Prior to the move, OHAs must be inspected (and treated, if necessary).

To regulate the movement of OHAs from quarantine areas, PPQ and/or State personnel will contact the following establishments.

- All moving companies in the State
- All truck and trailer rental companies in the State
- Media—radio, television, and newspapers

At all the establishments, PPQ and/or State personnel will distribute information, such as the "Don't Move Gypsy Moth" Program Aid, and explain the gypsy moth quarantine. At the moving companies and truck and trailer rental companies, PPQ and/or State personnel will leave: 1) information for distribution to homeowners and renters who must be regulated; and 2) a current list of QCAs authorized to work in the State.

Because OHAs are the most likely means of artificial spread, a strong public relations campaign is particularly important. The public must be informed through the media. PPQ personnel can obtain assistance in dealing with the media from Legislative and Public Affairs (LPA), a unit within APHIS.

Self-Inspection by Homeowners or Renters

PPQ officers, State personnel, employees of moving companies, or employees of rental companies must contact, well before their moves, the homeowners or renters who must be regulated. The homeowners or renters who must be regulated are the homeowners or renters who are moving OHAs from a quarantine area into or through a noninfested area. The homeowners and renters who must be regulated must be informed of their right to inspect their own OHAs.

Homeowners or renters who must be regulated can inspect their own OHAs if they use the procedures in Program Aid Number 1329, "Don't Move Gypsy Moth." In each State, homeowners and renters who must be regulated can obtain this Program Aid from PPQ officers, State personnel, employees of moving companies, or employees of rental companies.

Inspection by QCAs Under Compliance Agreements (CAs)

If the homeowners or renters who must be regulated do not desire to conduct a self-inspection, QCAs under CAs can inspect OHAs. (*See Qualified Certified Applicators (QCAs)* on page 12-1.)

Operating under CAs, QCAs who inspect OHAs will be: 1) trained by PPQ or State personnel; 2) licensed as pesticide applicators in each State in which they

operate; 3) responsible to PPQ personnel for preparation and distribution of certifying documents; and 4) monitored by PPQ or State personnel to ensure the quality of inspections.

Preinspection Procedure

Step 1: Ask the Homeowner or Renter Who Must be Regulated to do the Following

- Assemble all OHAs and other articles to be inspected or at least make the OHAs and other articles accessible for an easy inspection
- Identify all OHAs and other articles to be inspected.

Step 2: Assemble All Tools Necessary for the Inspection

- Certifying documents—to record the inspection
- Drop cloth—to lie on when examining the undersides of OHAs
- Flashlight, preferably a small, high-intensity flashlight—to illuminate nooks and crannies
- Hand mirror, preferably small and plastic-covered for safety—to examine the undersides of OHAs
- Paint scraper, preferably small and flexible—to scrap off egg masses
- Probe, preferably thin and flexible, possibly a screwdriver—to probe nooks and crannies
- Tools, such as Phillips and standard screwdrivers—to disassemble OHAs, if necessary
- Tools, such as a tire lug-nut wrench, a jack, and blocks—to remove wheels to check wheel wells and brakes, if necessary
- Workclothes, such as coveralls

Inspection Procedure

Step 1: Examine the Vegetation Around the OHAs for Indications About the Gypsy Moth Population

Infested OHAs are more likely when there are indications of a large population. However, even when there is no indication of a gypsy moth population, infestation of OHAs is still possible. Therefore, always do a thorough examination of each article.

Step 2: Thoroughly Examine Each OHA—and any Household Article—That Has Been Outdoors

The examination of each article (OHA or any exposed article) must cover all the surface area, including nooks and crannies. Use probes and flashlights to examine the nooks and crannies. Turn articles over to examine the lower surfaces. Remember that gypsy moth females favor sheltered surfaces for egg laying. If the articles cannot be turned over, examine by crawling underneath on a drop cloth, using a hand mirror, and/or probing with a screwdriver.

If necessary, disassemble articles likely to harbor the gypsy moth. Pay special attention to articles in close proximity to egg masses, larvae, or pupae.

Although they may not be typical OHAs, be sure to examine the following articles as if they were OHAs:

- Articles left outside
- Articles stored in areas open to the outside
- Articles stored in areas with an opening to the outside
- Articles stored indoors, but used outdoors

As articles are examined, separate the infested from the noninfested.

Step 3: Treat the Infested Articles; as an Alternative, Infested Articles can be Treated During Their Examination

See Treatments on page 13-5

Step 4: Safeguard the Inspected Articles

Ideally, inspections will be done on moving day during the egg-laying and larval-dispersal periods from April through August. However, if any inspection is not done on moving day and if the gypsy moth will have an opportunity to reinfest the articles, the articles must be safeguarded from reinfestation.

Safeguard the inspected articles by one or more of the following means

- :Cover with tarpaulin or plastic bags

- Pack immediately in moving van or truck and enclose or cover
- Store articles indoors.

Disposable plastic bags will safeguard articles for several days before a move. On moving day, the disposable plastic bags are removed from the protected articles and left behind.

Step 5: Document the Inspection

See Documentation for the OHA Inspections on page 13-6.

Treatments

Physical Removal of Egg Masses (Preferred for OHAs)

Use a wire brush or paint scraper to remove an egg mass from an OHA. Be sure to brush or scrape vigorously to remove all of the egg mass; however, do not brush or scrape so vigorously that the OHA is damaged.

Physical Removal of Egg Masses after Spraying

Apply Golden Natur'l Spray Oil to an egg mass, using: 1) a sprayer with an adjustable nozzle; 2) a paint brush; or 3) a similar brush. Thoroughly saturate the egg masses to the point of runoff so the egg mass is "soaked." The Golden Natur'l Spray Oil will penetrate rapidly destroying even the innermost eggs. Then, physically remove the egg mass, using a wire brush or paint scraper. Vigorously brush or scrape all of the egg mass from the surface.

NOTICE
The methods above are preferred over insecticide use or fumigation.

Fumigation of Egg Masses

Treatments for Egg Masses on page 7-2 contains the Treatment Schedule for OHAs.

Spraying of Larvae

When removing larvae by brush or paint scrapper is not practical, either of two insecticide may be used:

- Acephate (Orthene Tree and Ornamental Spray)
- Ficam W

Follow label instructions carefully.

Documentation for the OHA Inspections

Four types of documents are acceptable.

1. PPQ Form 540 (Certificate) For PPQ and State Personnel
2. PPQ Form 530 (Limited Permit) for PPQ and State personnel (particularly useful for treated, but possibly infested, RVs)
3. QCA document plus an attached copy of the document (*Qualified Certified Applicator (QCA) Document* on page P-1)
4. Self-Inspection Checklist (in Program Aid Number 1329)—for homeowners or renters who self-inspect.

Chapter 14

Mobile Homes and Associated Items

Contents

Regulation and Mobile Homes **14-1**
Preparation for the Regulation of Mobile Homes **14-1**
- Contacting All Mobile Home Haulers **14-2**
- Contacting the State Department of Transportation **14-2**
- Contacting the Media **14-2**
- Contacting the Operators of Mobile Home Parks **14-2**
- Contacting the Pesticide Applicators **14-2**

Preinspection Procedure **14-2**
Safety and Inspections **14-3**
Inspection Procedure **14-4**
Treatments **14-5**
- Physical Removal of Egg Masses **14-5**
- Physical Removal of Egg Masses After Spraying **14-6**
- Spraying of Larvae with Insecticide **14-6**

Documents for Mobile Home Inspections **14-6**
- PPQ Form 540 (Certificate) **14-6**
- PPQ Form 530 (Limited Permit) **14-6**
- QCA Document **14-6**

Use of the Documents for Mobile Home Inspections **14-7**

Regulation and Mobile Homes

Mobile homes and associated items are only regulated when moved from a quarantine area into or through an noninfested area. To move a mobile home from a quarantine area into or through an noninfested area, an inspection is necessary before the move; certifying documents are necessary during and after the move.

Preparation for the Regulation of Mobile Homes

To regulate the movement of mobile homes from quarantine areas, PPQ and State personnel will cooperate in the following activities.

Contacting All Mobile Home Haulers

All mobile home haulers who move mobile homes from generally infested to noninfested areas will be contacted and placed under Compliance Agreement (CA). Under the terms of the CAs, mobile home haulers will only haul mobile homes from quarantine area to noninfested areas after gypsy moth inspections have been performed and documented. Under the CAs, the mobile home haulers will know how to initiate the inspections and how to handle the certifying documents.

Contacting the State Department of Transportation

In some States, permits are required to move a mobile home. Contact with the State transportation office will allow access to copies of the permits enabling inspection arrangements.

Contacting the Media

Contact with media (radio, television, and newspaper) will allow access to mobile home owners. Media coverage will inform mobile home owners of the need for inspections and the possibility of self-inspection.

Contacting the Operators of Mobile Home Parks

Contact with the operators of mobile home parks will allow access to mobile home owners. Operators of mobile home parks will inform departing mobile home owners of the need for inspections and the possibility of self-inspection.

Contacting the Pesticide Applicators

Contact with individual pesticide applicators and with organizations for pesticide applicators will allow access to pesticide applicators who would be interested in becoming Qualified Certified Applicators (QCAs). QCAs are pesticide applicators who will be allowed to inspect mobile homes under CAs. See the subsection on *Qualified Certified Applicators (QCAs)* on page 12-1 for more information.

Preinspection Procedure

Step 1: Before the Move, Contact the Departing Mobile Home Owner

Explain the threat posed by the gypsy moth and the need to inspect departing mobile homes. Arrange the inspection. Before the inspection, ask the owner of the mobile home to do (or arrange) the following:

- Make the exteriors of the mobile home and of all associated items accessible for inspection
- Make the interior of the mobile home available for inspection, if necessary

- Provide equipment and labor to ensure rapid access to wheel wells, brakes, undersides, and other inaccessible places on the day of inspection
- Remove all skirting.

Step 2: Assemble All Necessary Tools and Equipment

- Binoculars—to examine suspected, distant egg masses
- Certifying documents—to record the inspection
- Flashlight, preferably a small, high-intensity flashlight—to illuminate nooks and crannies
- Ground cover— to lie on when examining the undersides of the mobile homes
- Hand mirror, preferably small and plastic-covered for safety—to examine the undersides of the mobile homes
- Ladder—to examine the roof and areas under the eaves
- Paint scraper (putty knife), preferably small and flexible—to scrape off egg masses
- Probe, preferably thin and flexible, possibly a screwdriver—to probe nooks and crannies
- Tools, such as Phillips head and standard screwdrivers—to remove panels, if necessary
- Wire brush (if a paint scraper is not used)—to scrape off egg masses
- Workclothes, such as coveralls, hardhat, and goggles

Inspections require the following conditions:

- If possible, the inspection must occur on moving day during blow-in and egg-laying seasons (during the months of April through August); if not possible, the inspection must occur within five days of the move
- Mobile home and associated items must be accessible to the inspector
- Weather conditions must be favorable

Safety and Inspections

To prevent injury, use the following procedures when performing inspections:

- Always check for spiders, such as the black widow and brown recluse
- Always put blocks under the wheels of the mobile home to be inspected
- Always wear coveralls
- Always wear a hardhat, gloves, and safety glasses

- Beware of sharp edges, particularly flashing and siding edges. Never run your hand over edges that could be sharp
- Never crawl under a mobile home on jacks
- Use a flashlight to illuminate a dark area before entering
- Use mirrors, instead of entering tight corners

Inspection Procedure

Step 1: Examine the Vegetation Around the Mobile Home for Life Stages of the Gypsy Moth

If the vegetation in the surrounding area is infested, the mobile home is likely to be infested. However, even when there is no indication of a gypsy moth population in the surrounding area, infestation of the mobile home is still possible. Therefore, all inspections must be exacting and complete.

Step 2: Examine the Mobile Home and Associated Items for Life Stages of the Gypsy Moth

Look in, on, and under everything. The examination must cover all exterior surfaces, including surfaces deep within nooks and crannies. Use probes and flashlights to examine all the nooks and crannies.

Examine lower surfaces very carefully. For egg laying, gypsy moth females favor sheltered undersurfaces. Examine the underside of a mobile home by crawling on a drop cloth, using a hand mirror, and/or probing with a screwdriver.

Inspect the following with particular care:

- Air conditioners (remove covers)
- Awnings (open if necessary)
- Blocks on which the mobile home rests
- Chimney flashing and rainguard
- Compressors
- Drain pipes
- Expando unit (open if necessary)
- Flashings
- Fuse boxes, circuit breaker box, and/or electrical connections
- Hitch, including the underside of the I-beams and junction
- License plate

- Moldings (probe if necessary)
- Mud flaps
- Patio room
- Propane gas tanks (including the gas cap)
- Roof and eaves
- Shutters
- Skirting
- Steps
- Taillights
- Underside of the mobile home, including floor boards, frame, and tubing
- Vents
- Wheels, including the inside of the rim and brake drums (if accessible)

NOTICE

Commonly overlooked sites for larvae and egg masses on mobile homes are wheels, especially the inner sides, chimney caps, and flashing, and the lip of the lower wall.

- Window sills (top and bottom)

When necessary, articles likely to harbor the gypsy moth must be disassembled prior to the inspection. The disassembly can be done by the owner of the mobile home, workers contracted by the owner of the mobile home, or the inspecting QCA.

Associated items and parts of the mobile home near infested vegetation deserve close attention.

Step 3: Treat the Infestations

See information on *Treatments* on page 14-5 below.

Step 4: Document the Inspection

See the information on *Documents for Mobile Home Inspections* on page 14-6 on the following page.

Treatments

Physical Removal of Egg Masses

Use a wire brush or paint scraper to remove an egg mass from an OHA. Be sure to brush or scrape vigorously to remove all of the egg mass; however, do not brush or scrape so vigorously that the finish is damaged.

Physical Removal of Egg Masses After Spraying

To apply Golden Natur'l Spray Oil to an egg mass, use: 1) a sprayer with an adjustable nozzle; 2) a paint brush; or 3) a similar brush. Thoroughly saturate the egg masses to the point of runoff so the egg mass is "soaked." The Golden Natur'l Spray Oil will penetrate rapidly destroying even the innermost eggs. Then, physically remove the egg mass, using a wire brush or paint scraper. Vigorously brush or scrape all of the egg mass from the surface. Do not brush or scrape so vigorously that the finish is damaged.

NOTICE

The methods above are preferred over insecticide use.

Spraying of Larvae with Insecticide

An insecticide, such as acephate (Orthene Tree and Ornamental Spray), is to be used only for larvae when removal by brush or paint scraper is not practical.

Follow insecticide label instructions carefully. More information is in *Treatments* on page 7-1.

Documents for Mobile Home Inspections

The following three documents will allow the movement of mobile homes from quarantine areas to noninfested areas.

PPQ Form 540 (Certificate)

Characteristics of the Certificate are as follows:

- Issued by PPQ or State inspectors
- Intended for mobile homes found to be free of gypsy moth

PPQ Form 530 (Limited Permit)

Characteristics of the Limited Permit are as follows:

- Issued by PPQ or State inspectors
- Intended for mobile homes treated to be free of infestation or are suspected of being infested, although appearing free of infestation

QCA Document

Characteristics of the QCA Document (*See Qualified Certified Applicator (QCA) Document* on page P-1) are as follows:

- Issued by QCAs

- Intended for mobile homes completely free or treated to be free of gypsy moth

Use of the Documents for Mobile Home Inspections

The inspection documents will allow monitoring of the movement of mobile homes and associated items. Using the inspection documents will allow the following:

- Detection of inadequate inspections
- Inspections for the most threatening moves
- Trapping to survey the most threatened areas

Use the documents to list the moves from the most threatening to the least threatening. Inspect and trap at the most threatening moves. Continue down the list and inspect and trap as resources permit.

The following table on prioritizing risk from transported mobile homes can be used to list moves from the most threatening to least threatening.

Table 14-1 Prioritizing Risk from Transported Mobile Homes

Priority	Document	Treated or Untreated Mobile Home	Situation at Site of Origin
1	QCA Document	Treated	Heavy Infestation
2	QCA Document	Treated	Light Infestation
3	QCA Document	Untreated	Heavy Infestation
4	QCA Document	Untreated	Light Infestation
5	Limited Permit	Treated	Heavy Infestation
6	Limited Permit	Treated	Light Infestation
7	Limited Permit	Untreated	Heavy Infestation
8	Limited Permit	Untreated	Light Infestation
9	Certificate	Untreated	Heavy Infestation
10	Certificate	Untreated	Light Infestation

Chapter 15

Control Section Introduction

Contents

Review of Sections **15-1**
Purpose of Control **15-2**
- Final Environmental Impact Statement (FEIS) **15-3**
- Environmental Assessment (EA) **15-3**
- Gypsy Moth State Survey Committee **15-3**
- Other Sources of Information **15-3**

Review of Sections

The following sections in this manual will help to explain control procedures and/or information on the following activities:

- *Safety Precautions* on page 16-1
  - Safety references
  - Safety and cleanup materials
- *Planning for Control Activities* on page 17-1
  - Materials needed
  - Procedure for control activities
    - Gather all pertinent data
    - Meet with cooperator
    - Determine options and recommendations for eradication
    - Hold public meeting
    - Determine application method (for insecticide use)
    - Write the site-specific EA
    - Write letters for the administrator's signature
    - Determine when to begin application
- *Eradication Using Insecticides* on page 18-1
  - Materials needed

- Procedure for eradication using pesticides
  - Notify public of spraying
  - Notify contractor to report
  - Calibrate and check spray equipment
  - Monitor weather conditions
  - Begin application
  - Monitor application and weather
  - Maintain spray block map
  - Conduct posttreatment survey
- *Procedure for Eradication Using Mass Trapping* on page 19-2
  - Materials needed
  - Procedure for eradication using mass trapping
    - Plot trap locations on a map
    - Select sites for placing traps
    - Set traps
    - Check the traps
    - Submit gypsy moth specimens
    - Remove traps
    - Report mass trapping results
    - Complete survey maps
    - Interpret results

Purpose of Control

For APHIS, the purpose of control activities is only to eradicate isolated infestations of gypsy moth.

APHIS will cooperatively fund the eradication of isolated infestations if the isolated infestations are: 1) 640 acres or smaller; 2) on non–Federal land; and 3) not adjacent to Federal lands.

Suppression efforts in the infested areas where eradication is no longer feasible are the responsibility of the USDA's Forest Service (FS) and individual States. APHIS does *not* fund efforts to control the gypsy moth by suppression.

Final Environmental Impact Statement (FEIS)

All eradication efforts are carried out under the Final Environmental Impact Statement as supplemental—1995 (FEIS). The FEIS contains requirements that must be followed in conducting an eradication program. Review the FEIS when planning an eradication effort.

NOTICE

Failure to follow the requirements of the FEIS could lead to an injunction or lawsuit.

Environmental Assessment (EA)

Decisions concerning APHIS participation in eradication activities are based on the results of site-specific environmental analyses. All eradication efforts are conducted in compliance with the National Environmental Policy Act (NEPA). *See* *Guidelines for Environmental Documents* on page H-1, which contains instructions for writing a site-specific EA.

This section on control will provide guidance through the steps necessary to be taken once an isolated infestation is delimited. A substantial amount of planning is required in an eradication effort.

Gypsy Moth State Survey Committee

The Gypsy Moth State Survey Committee is responsible for coordinating gypsy moth efforts among FS, State, and APHIS-PPQ personnel. The Gypsy Moth State Survey Committee will meet to determine what course of action to take. While the PPQ Plant Health Director (PHD) will take the lead in arranging meetings, the lead agency will be determined by the survey committee.

Other Sources of Information

This manual section does not duplicate all the information covered in the Aerial Application Manual nor does it cover all the duties and responsibilities of the Contracting Officers Representative. Detailed information (e.g., *Methods for Gypsy Moth Eradication* on page G-1, *Checking and Calibrating Aircraft* on page J-1, *Public Meetings/Public Relations* on page I-1) is covered in the Appendix Section because it would interfere with the flow of procedures.

Chapter 16

Safety Precautions

Contents

Introduction to Safety Precautions **16-1**
Safety References **16-1**
Safety and Cleanup Materials **16-2**
Safety Materials **16-2**
Cleanup Materials **16-2**

Introduction to Safety Precautions

Safety must be a prime consideration in all eradication efforts. Supervisors must stress safety practices in preprogram planning and during all activities. When necessary, supervisors must enforce on-the-job safety procedures.

Safety References

The following pesticide safety references must be available to all personnel handling pesticides.

- APHIS Cholinesterase Testing Program—APHIS Directive 450.5 dated 7/8/82
- Hazardous Materials: 1980 Emergency Response Guidebook. DOT-P-5800.2 Department of Transportation
- Pesticide First Aid Handbook
- Pesticide Label and Labeling Safety Instructions/Precautions
- PPQ Guidelines for Managing and Monitoring Pesticide Spills - M390.l402 (Revised Jan. 1983)
- Recognition and Management of Pesticide Poisoning by Donald P. Morgan, Environmental Protection Agency, 1982
- The Standard Pesticide Users Guide by Bert L. Bohmont. Published by Prentice-Hall Inc. (The reference used in PPQ's Self-Instructional Pesticide Applicator Certification Training)

Safety and Cleanup Materials

Before beginning a spray program, get the necessary safety and cleanup materials.

Safety Materials

Safety materials should include the following:

- First aid kit—bus and truck kit (GSA #6545-00-664-5312 or equivalent) (one each)
- Fire extinguisher—five-pound size for class A, B, and C fires (one each)
- Portable eye wash kit (two each)

Cleanup Materials

Cleanup materials should include the following:

- Absorbent material (GSA # 7930-00-269-1272) (sweeping compound, sawdust, kitty litter, or other absorbent materials) (25-pound bag)
- Broom (GSA # 7920-00-292-4375 or equivalent) (one each)
- Coveralls—disposable (four pairs)
- Dust pan (GSA # 7290-00-616-0109 or equivalent) (one each)
- Garbage can—large, metal (or heavyduty plastic) with removable cover for storing contaminated materials for later disposal (one each)

NOTICE

This may also be used to store the cleanup materials in the rear of the pickup truck during transport. When subcompact vehicles are involved, supervisors will use their judgment in selecting materials to be used.

- Liquid detergent—pint bottle (one each)
- Plastic bags—large, heavyduty, with ties (GSA # 8105-00-848-9631 or equivalent) (twenty-five each)
- Plastic cover or tarpaulin (to cover dry spills) (GSA # 8135-00-529-6487 or equivalent) (one each)
- Respirators—approved with approved pesticide canisters (two each)

NOTICE

Self-contained breathing apparatus must also be available in operations where methyl bromide (MB) is used.

- Rubber boots—unlined, vinyl (two pairs)
- Rubber gloves—unlined, vinyl (four pairs)
- Scrub brushes (GSA # 7920-00-068-7903 or equivalent) (two each)
- Shovel—square-point with “D” handle (GSA # 5120-00-224-9326 or equivalent) (one each)
- Water container—five-gallon (GSA # 8115-00-145-0038 or equivalent) (one each)

Chapter 17

Planning for Control Activities

Contents

Introduction **17-1**
Materials Needed **17-1**
Procedure for Control Activities **17-2**
Gypsy Moth Planning Calendar **17-7**

Introduction

This section is an overview of the steps involved in planning a control project. Included in this section are the following topics:

- Materials needed
- Typical planning calendar
- Usual procedure for control activities

Materials Needed

The following materials and supplies are usually necessary when planning a control project:

- Final Environmental Impact Statement (FEIS)
- For possible insecticide use: marking balloons, helium, and kite string, or GPS (global positioning system) in spray aircraft
- Information on traps and lures (for possible mass trapping)
- Labels and MSDSs for approved insecticides (for possible insecticide use)

NOTICE

Insecticide Labels and MSDSs on page F-1 and *Methods for Gypsy Moth Eradication* on page G-1contain information on those insecticides approved for eradication projects and those approved for suppression.

- List of cooperators and telephone numbers

- Map for marking spray/eradication blocks (2 inches per mile or larger scale) (a topographic map—7 1/2 minute—is ideal)
- Map showing the results of the delimiting survey
- Results from egg-mass surveys or larval trapping
- Scoping list of names and addresses

Procedure for Control Activities

Following are the usual steps in planning possible control activities.

Step 1: Gather All Pertinent Data

Gather data to make a preliminary determination of the area to be treated and the possible control method. Do not make a final determination until public meetings and other contacts (scoping process) is complete and an Environmental Assessment (EA) is written.

The necessary data on the size of the area to be treated is based on the following factors:

- Data on other life stages (i.e., data from egg-mass surveys and larval trapping)
- Host availability
- Professional judgment
- Trap data (from delimiting survey map)

Using information from the delimiting survey, highlight on a map all those traps with multiple catches. Draw a line between the multiple gypsy moth catch traps on the boundary of the possible infestation. The area enclosed within the multiple catch traps roughly outlines the boundaries of the infested area. Determining the size of the infestation is also based on the data from an egg-mass survey and/or larval trapping. Egg masses usually indicate the core area of the infestation. The size of the area for treatment also depends on host availability and geography as well as prevailing weather (e.g., an infested hilltop may require treatment of an expanded area due to the potential for larval dispersal by wind).

After determining the probable introduction site of the infestation, try to determine when the gypsy moth arrived. An estimate of the length of time the infestation has been present allows an estimate of how far the infestation may have spread.

The treatment area almost always is larger than the area infested, but may be smaller than the area in which male moths were caught.

NOTICE

Treating less than the infested area is only recommended where sufficient survey data is not available to determine the boundaries of the infested area.

Outline the area for treatment on a map in order to determine the total number of acres to be treated. Remember, infestations over 640 acres in size are the responsibility of Forest Service (FS) and individual States to eradicate. Infestations found on Federal land or land contiguous to Federal land is the responsibility of FS to eradicate. See *Responsibility for Eradication Costs* on page 17-3 for determining responsibility for eradication.

Step 2: Meet With Cooperators

For each State, a committee consisting of a representative from at least the State, FS, and PPQ should exist. The PPQ Plant Health Director (PHD) will take the lead in arranging meetings. Determine which agency will lead the project. Use Table 17-1 to determine who is responsible for eradication costs.

Table 17-1 Responsibility for Eradication Costs

If the infestation is:	And the infestation is:	Then:
On Federally owned land	→	FS funds the treatment
On land contiguous (next) to Federally owned land	→	FS and State share the costs of treatment (50% FS/50% State)
On non–Federally owned land or not contiguous to Federally owned land	641 acres or greater	
	640 acres or less	APHIS and State share the costs of treatment (50% APHIS/50% cooperator)[1]

1 May not always be possible to meet this proportion exactly.

Step 3: Review Options and a Possible Recommendation for Eradication

FEIS Alternatives

During a meeting with all cooperators, review the FEIS for its alternatives. Select the preferred option based on the nature of the infestation, its density, and its size. The four alternatives listed in the FEIS are.

1. Biological insecticide treatment
2. Chemical insecticide treatment
3. Integrated pest management
4. No action

The preferred method of treatment (as stated by the FEIS) is integrated pest management. Prepare to discuss all alternatives considered at future public meetings (as well as any subsequent site-specific EA). Include “No Action” as an option for consideration.

For additional information on the approved methods for eradication, see *Methods for Gypsy Moth Eradication* on page G-1.

Step 4: Hold a Public Meeting

To comply with NEPA, hold a public scoping meeting: 1) to provide for public input on issues and concerns; and 2) to limit the scope of the analysis to be provided by the EA. The purposes of the public scoping meeting are: 1) to get public involvement in the decision-making process; 2) to identify issues of concern; and 3) to provide information on the various options and their consequences.

For information on holding public meetings, see *Public Meetings/Public Relations* on page I-1

Step 5: Determine Insecticide Application Methods

If proposing the use of an insecticide (or insecticides), address the specific selection for the project in the site-specific EA. When selecting insecticides, consider the following factors:

- Biological efficiency of the insecticide (or insecticides)
- Economic efficiency of the insecticide
- Environmentally sensitive sites in the proposed treatment area (e.g., the presence of endangered species in the infested area)
- Project objectives

In addition, any selected insecticide **must** meet the following criteria:

- Insecticide must be approved for use in the FEIS, if applications are conducted or financed by APHIS
- Insecticide must be registered with the Environmental Protection Agency (EPA) for use against gypsy moth
- Insecticide must have a method of application which conforms with label specifications

NOTICE

If applications are not conducted or financed by APHIS, insecticides used for the certification of Christmas trees or nursery stock do not have to be approved for use in the FEIS.

Most insecticides will be aerially applied using fixed-wing aircraft or helicopters. Use only aircraft that are highly maneuverable and can operate at low air speeds close to the tree canopy.

Where aerial applications are not appropriate, use ground treatments. Ground treatments are more costly and should only be used to treat small, localized infestations. Ground spraying is difficult, especially when treating tall, mature trees. Contact the Otis Methods Development Center if you are considering ground application.

Otis Plant Methods Center
Building 1398
Otis ANGB, MA 02542

Step 6: Write the Site-Specific EA

An eradication project requires a site-specific EA. In most States, the State agency involved in the eradication effort will prepare or will help prepare the EA.

For information on how to prepare an EA, *See Guidelines for Environmental Documents* on page H-1.

Step 7: Write Letters for the Administrator's Signature

If a treatment is to be used, write a "Finding of No Significant Impact" (FONSI) 45 days before the beginning of the treatment. Use the examples in *Guidelines for Environmental Documents* on page H-1. Mail the FONSI to Environmental Services, USDA-APHIS, 4700 River Road, Unit 149, Riverdale, MD 20737. In the FONSI, address the specific treatment to be used.

Step 8: Determine When to Begin Application

To decide when to start an insecticide treatment, the preferred method is to use egg hatch. Monitor a caged egg mass to see when eggs begin to hatch. When larvae are found, monitor their size to establish their stage of instar development. Begin treatment when second instar larvae begin to appear.

Refer to Identifying Gypsy Moth Early Larval Instars by Michael L. McManus and Daniel B. Twardus for distinguishing characteristics.

Use Table 17-2 to establish the stage of instar development.

Table 17-2 Characteristics of the Early Instars of Gypsy Moth

Instar	CHARACTERISTICS		
	Body Color	**Head Capsule Color**	**Size**
First	Buff-color at hatching, then black — usually greasy before molt	Black	1 mm at hatch, 3–5 mm
Second	Black with irregular yellow marks	Black	5.5–11 mm
Third	Orange, nearly crown-shaped markings	Black	10–15.5 mm
Fourth	5 pairs of blue spots followed by 6 pairs of brick red spots	Yellow-mottled with black markings	15–24 mm

Treat with *Bt* when larvae are late first and early second instar.

Apply Gypcheck only to first and early second instars.

All insecticides other than *Bt* and Gypcheck can be used against first through third instars; however, the most desirable time to treat is when the larvae are late first and early second instars.

Apply pheromones approximately one week before the first flight of the adult male.

If no larvae are found, use foliage development to decide when to start treatment. Select a preferred host tree and begin treatment when leaves have opened one-third to one-half of their normal size.

Table 17-3 *Planning Calendar for Gypsy Moth Activities* on page 17-7 contains a planning calendar showing a timeline for accomplishing specific events. If questions arise when planning a control project, contact Science and Technology (Otis Methods Development Center). They are a resource on control projects

Gypsy Moth Planning Calendar

Table 17-3 Planning Calendar for Gypsy Moth Activities

Date:	Event/Task:
November - December	PPQ, PHD contacts State officials to determine presence of endangered species
December 1	Conduct State Survey Committee meeting to review delimiting trap data and do the following. ◆Determine size of (potential?) treatment blocks ◆Determine lead agency for control project
December 15	State agencies meet (e.g., Agriculture, Parks Commission, Natural Resources, Forestry, Conservation, and any other group that may be involved in control activities) Complete Compliance Agreements (CAs)
December 31	Determine funding commitments
January - February	Hold public meetings Write draft of site-specific Environmental Assessment (EA) Contact Federal Aviation Administration (FAA) to get flyover approval when aircraft are used
February 15	Draft site-specific EA for Environmental Services in Riverdale (Unit 141) with a copy to Invasive Species and Pest Management (ISPM)
February 16 – March 5	Draft EA reviewed in Riverdale and returned with comments
February - March	Complete detailed work plan
March 1	Order insecticide and equipment (maps, balloons) and mark spray blocks on treatment map Contract for aircraft and insecticide
	Final EA and Finding of No Significant Impact (FONSI) (and possibly a Record of Decision (ROD) prepared and forwarded to Riverdale. Environmental Services and ISPM approve final EA and forwards to PPQ, Deputy Administrator
March 21	Send EA and FONSI (and ROD) for Administrator's signature 30 days before treatment
March 21-31	APHIS Administrator reviews and signs ROD. PPQ forwards original document to State Plant Health Director (SPHD) and forwards copies of the signed documents to ISPM, the PPQ Regional Office performing Environmental Documentation, and the State cooperator
April 1	Begin treatment anytime after the ROD is signed—if conditions are favorable

Chapter 18

Eradication Using Insecticides

Contents

Introduction **18-1**
Materials Needed **18-1**
Procedure for Eradication Using Insecticides **18-2**

Introduction

Eradication by application of insecticides is often done because it will drastically reduce a gypsy moth population. After an initial reduction of a population, other techniques, such as mass trapping or repeated insecticide application, may be used.

This section contains information on: 1) the materials needed; and 2) the procedure for eradication using insecticides.

Materials Needed

The following materials are usually required for eradication:

- *Aerial Application Manual*
- Balloons and helium for small spray blocks
- Communication equipment (radios and antennas)
- Dye cards (for monitoring spray deposits) or water-sensitive monitoring paper
- Equipment to measure relative humidity (only if making ULV application)
- Insecticide(s) to be used
- Kytoons, balloons, helium or other guidance technology (e.g., geopositioning systems equipment) for large spray blocks
- Labels for insecticides being used
- Material Safety Data Sheets (MSDSs)

- Prospectus and contract
- Radios
- Safety equipment
- Topographic maps (1:24,000) or other suitable map of larger scale
- Wind meter

Procedure for Eradication Using Insecticides

Step 1: Notify Public of Spraying

Approximately one week before the actual spray day, notify the public, media, and appropriate law enforcement officials within the spray block. In some cases, it may only be possible to make these notifications two or three days before the treatment due to weather conditions and the desirability for exact application timing with the gypsy moths' biological development.

Step 2: Notify Contractor to Report

Notify contractor five to seven days prior to anticipated starting date or as required by the contract.

Step 3: Check and Calibrate Spray Equipment

To check and calibrate the aircraft spray system, use the guidelines in *Checking and Calibrating Aircraft* on page J-1. Also check for leaks, dirt, and faulty equipment. If using nozzles, they should be new and made of stainless steel. Do not use brass nozzle tips. The end nozzle's location should be no more than three-quarters of the wing span. If boom extends more than six inches beyond the end nozzle, the end nozzle should be fed from the end of the boom by use of a bleed line.

See also *Nozzles and Pressures* on page K-1.

Step 4: Monitor Weather Conditions

NOTICE

Various weather will prevent or terminate the application of insecticides:
•When high temperatures are above 80 °F when either low volume (LV) or ultra low
•volume (ULV) sprays are planned
•When humidity is below 50 percent
•When insecticide is not properly settling
•When winds are above 10 miles per hour

Weather plays an important part in aerial applications. Winds may cause spotty coverage within the target area. To reduce drift and to comply with the FEIS, apply insecticides only when winds are below 10 miles per hour.

High temperatures, combined with low humidity, may cause fine sprays, either low volume (LV) or ultra low volume (ULV), to evaporate or drift away without reaching the tree canopy. Apply insecticide only when temperatures are below 80 °F. High temperatures can cause excessive evaporation of the insecticide suspension before it reaches the target. The amount of evaporation depends on the type of insecticide being used. When temperatures rise, inversion layers may form in the air and prevent insecticide from depositing on the foliage.

Suspend application when humidity at ground level drops below 50 percent. At this time, humidity at release point above trees will be much lower and result in excessive evaporation.

Suspend application whenever rain is imminent. After rain, apply insecticides only when the target foliage has dried sufficiently. Follow the insecticide label for instructions on application before or after rainfall.

Suspend application whenever the insecticide is not properly settling in the target area. You can determine the insecticide settling pattern by monitoring dye cards.

The best weather for spraying is usually from dawn until mid-morning (4 a.m. to 10 a.m.). Atmospheric conditions are best for getting proper deposition in treatment areas at these times.

A simple indicator of time to cease is soil/air temperature difference. Take the soil temperature by placing the thermometer probe on an unshaded site. Shade the thermometer for three minutes before reading. Take the air temperature five feet above the surface in the open, but with the thermometer shaded. When soil

temperature rises above air temperature, the spray pattern generally breaks up and the spray program should cease. If possible, monitor temperature and humidity at thirty to fifty feet above tops of target trees where aircraft is releasing spray.

Step 5: Begin Application

CAUTION

Do not apply insecticides when children are walking to school or waiting for school buses.

Begin spraying after the weather and aircraft have been checked and approved. Continue daily spray operations as long as weather conditions permit.

Step 6: Monitor Application and Weather

Monitor aerial applications by one of the following methods:

1. Observation aircraft flying behind the spray aircraft
2. Ground observers and dye cards (or the water-sensitive monitoring paper) on the ground

For large treatment blocks, use both methods for monitoring (observation aircraft *and* dye cards).

Observation Aircraft

Observation aircraft are only necessary for large treatments.

Ground Observers and Dye Cards

Follow the specific instructions that come with the dye cards or the water-sensitive monitoring paper. Use the monitoring paper to assess spray distribution, droplet density, and droplet size. Remember the droplet size observed on water-sensitive cards is about twice as large as the actual droplet falling through the air. Refer to label or Otis Plant Methods Center Laboratory for proper droplet size.

If available, make use of a “Swath Kit” for characterization of aircraft and reading monitoring cards. With some materials, a dye must be used to allow the Swath Kit to read individual droplets.

Step 7: Maintain Spray Block Map

For large spray areas, maintain a *Spray Block Map*. Following each day of spraying, color all maps to show the treated areas. When making two or three applications (as with *Bacillus thuringiensis*), draw diagonal lines on the map to show progress of the first application and crosshatch for the second application. Indicate the third application by shading the area with a solid color. It is helpful to show on the map the number of gallons or pounds of insecticide applied in each block.

Step 8: Conduct a Post-Treatment Survey

Conduct a post-treatment survey of the treatment area by using the delimiting survey instructions. Use 16 to 36 traps per square mile. Follow the instructions covered under *Steps for Conducting a Delimiting Survey* on page 3-2.

If no moths are found, declare area eradicated. If a few single catches are made, use mass trapping or one more year of delimiting to determine if an infestation remains over the winter. The following year, either decide to retreat or declare area eradicated.

Chapter 19

Eradication Using Mass Trapping

Contents

Mass Trapping Introduction **19-1**
Materials Needed **19-1**
Procedure for Eradication Using Mass Trapping **19-2**

Mass Trapping Introduction

Mass trapping is the only behavioral method approved for eradication. Mass trapping is the use of numerous traps in an infested area to lure male moths into the traps and eliminate them. The trapped male moths are eliminated from the breeding population. Other males will be confused by the lure within the trap. The effect is population reduction and/or eradication.

This section contains information on: 1) the materials needed; and 2) the procedure for eradication using mass trapping.

Materials Needed

The following materials and supplies are needed for mass trapping:

- City, township, or topographic maps (scale 1" = 100–400 ft.) if available, an Agricultural Stabilization and Conservation Service (ASCS) aerial photo maps for rural areas (scale 8" = 1 mile)
- Colored pencils for mapping moth finds
- Delta traps (plan at least 3 traps, but no more than 10 traps per acre)
- Disparlure
- First aid kit
- Grid overlay, calipers, or ruler
- Handouts for homeowners
- Small backpack
- Staples and stapler for placing traps

- Surveyor's flagging ribbon
- Trap site description sheet

Procedure for Eradication Using Mass Trapping

Step 1: Plot Trap Location on a Map

Determine the infested area. Mass trap at least 400 feet beyond suspected infestation boundaries.

Plot trap locations well in advance of the trapping season (in the late winter or early spring).

Very detailed maps are required because some traps will be as close as 66 feet apart. For residential areas, city maps showing lot boundaries on the map (scale 1"= 400' or less) will be sufficient. For rural areas, topographic maps and county ASCS aerial photo maps (8" = 1 mile) are good.

The following table shows inter-trap distances for the various trap densities used in mass trapping.

Table 19-1 Inter-Trap Distances for Mass Trapping

Traps per square acre	Inter-trap distance in feet
3	120
4	105
5	95
6	87
7	80
8	75
9	70
10	66

Select the trap density to use for mass trapping. If the core area of the infestation is known, set traps at a higher trap density in the core area.

EXAMPLE You've delimited a 40-acre gypsy moth infestation and you know from trap data and egg-mass survey that the core of the infestation is about 10 acres. You decide to trap the core area at 10 traps per acre and the surrounding 30 acres at 3 traps per acre. Plot 1 trap every 66 feet in the core area (100 traps) and 1 trap every 120 feet in the surrounding area (90 traps).

Overlay a uniform grid on a map and mark the grid points based on trap density and the map's scale. Use a grid to plot trap locations to ensure proper trap distribution.

NOTICE

Do not randomly place traps in the infested area.

Once trap locations are on the map, number the traps. Consecutively number each trap location within the infested area. In the field, each trap must have a number corresponding to its placement site. Clearly mark the trap location number on the map.

Step 2: Select Sites for Placing Traps

Select individual host trees as close to the plotted map location as possible. Try to place all traps on preferred hosts. If a preferred host is not close to the plotted trap site, choose a less desirable host at that site. It is more important to place the trap near the plotted location than on a preferred host away from the plotted site. Host trees are grouped according to gypsy moth preference and are as follows.

Table 19-2 Hosts Preferred by All Larval Instars

◆Apple	◆Boxelder	◆Speckled alder
◆Aspen	◆Larch	◆Sweet gun
◆Basswood	◆Linden	◆Willow
◆Birch (except yellow and black)	◆Mountain ash	
	◆Oaks (all types)	

Table 19-3 Hosts of Later Larval Stages

◆Beech	◆Chestnut	◆Pine
◆Blueberry	◆Hemlock	◆Spruce

Step 3: Set Traps

Table 19-4 Hosts Larvae Avoid

◆Arborvitae	◆Elder	◆Locust[1]
◆Ash	◆Currant	◆Maple[1]
◆Azalea	◆Grape	◆Poison ivy
◆Balsam fir	◆Holly	◆Red cedar
◆Butternut	◆Honeysuckle	◆Sycamore
◆Cedar	◆Horse chestnut	◆Tulip poplar
◆Dogwood	◆Juniper	◆Yellow poplar

1 If host selection is limited, gypsy moth larvae will feed on these trees.

The timing for setting traps is critical. Set all traps before male moths emerge. One way to estimate when males will emerge is to check the records for the earliest date native males have been caught in previous years. Also, follow pest reports (e.g., IPHIS Bulletin Board) of recent gypsy moth finds in areas south of your location. Place all traps before the males emerge.

The approximate locations of traps are already marked on a map. Use discretion in selecting the best trap site within an area of no more than halfway to surrounding trap sites.

Trap Placement

When placing traps, use the following rules.

1. Place traps four to five feet high on tree trunks because most gypsy moths fly near ground level. Place traps on trunks rather than branches because traps on trunks catch up to six times more moths than traps on branches. In areas frequented by small children or livestock, place the trap out of their reach.

2. If possible, place traps in shady areas. Do not set the trap where foliage or branches will block the trap openings.
3. Complete trap record sheets. Mark the trap number (from the map) and date on the trap before leaving the site.

The distance between traps depends on the selected trapping density. Whatever the density, place the traps in a uniform array.

Step 4: Check the Traps

After setting all traps, check them on a regular schedule. For the core area, check at least once a week; for the surrounding area, check at least every one to two weeks. Check traps more frequently when determining the timing of male emergence (pupae to adult) or when the risk of infestation or vandalism is likely.

Plan your trap checking route before leaving the office. Select a route using an efficient trap run.

When checking traps, have a supply of replacement traps on hand. If replacing a trap, number the replacement trap with the same location number as the original trap and an indicator that the trap is a replacement.

NOTICE

Before assigning personnel to check traps, train the personnel to identify male gypsy moths.

When checking traps, look for the following.

1. Check overall trap condition and replace damaged traps.
2. When a trap contains a suspect moth, note the find on the survey map and field record form. (Each trapper will notify the supervisor according to local policy.
3. Record the trap inspection by noting the date on the trap and the trap record.
4. Identify each trap with the map plotted trap number.

Check the traps by opening one triangular end. Look into the trap to see if there are any male moths. If the trap is full of male moths, remove and replace the

trap. Number the replacement trap with the same number as the original trap and an indicator that the trap is a replacement, e.g., #321R.

Step 5: Submit Gypsy Moth Specimens

Submit the whole trap with the suspect moth to the supervisor or designated identifier for identification. Write the following information for each positive trap.

1. State
2. County
3. Town
4. Trap number
5. Trap tender's name or identification number
6. Date
7. Host plant

Step 6: Remove Traps

At the end of the trapping season, remove all set traps and examine each for male moths. Carefully look for missing traps. If the trap number cannot be read, write the trap number on the trap (so when examining the trap back at the office, the find can be located).

When removing the trap, remove all other materials (staples, nails) used in trapping. Also, remove all flagging tape.

Deliver or mail each trap with suspect male moths to the officer/identifier responsible for mass trapping.

Flatten empty used traps and dispose of by burning in an incinerator or by burying at a sanitary landfill.

Step 7: Report Mass Trapping Results

See GM Data Collection on page D-1 for instructions on reporting mass trapping data into NAPIS. **Do not** report into NAPIS until all the data have been collected and summarized by county. NAPIS reports will summarize mass trapping results by county.

Step 8: Complete Survey Maps

Record all positive trap catches on the survey field map. Use the survey maps with positive and negative finds for postseason review and decision making. If necessary, use moth catch patterns for planning egg-mass surveys.

At the end of the season, make permanent maps by transferring information from the field maps. Be neat, clear, and accurate when transferring information. It is very important that mass trapping results are correct on the map.

Step 9: Interpret Results

If mass trapping is successful, mass trapping will catch a large percentage of the male gypsy moths. Interpret the results of the trap catches. Multiple catches of gypsy moth in multiple traps will warrant conducting an egg-mass survey. Light infestations in excellent habitat or heavy infestations warrant insecticide treatment of the infested area in the next year.

Consider the following factors in interpreting mass trapping:

- Data on other life stages
- Geographical features of the area
- Host type and availability
- Professional judgment
- Trap data

Even if the mass trapping effort is not successful in eradicating the infestation, the information gathered will provide a much better picture of the area and density of the infestation. Since traps are placed at least every 120 feet (3 traps per acre), moths will most likely travel a short distance before getting into a trap, thereby allowing a better delimiting of the infestation.

Chapter

20

Transition Area Section Introduction

Contents

Introduction to Transition Area **20-1**
Significance of the Transition Area **20-2**
Transition Area Definitions **21-1**
Survey Activities **22-1**
Transition Area Regulatory Activities **23-1**
Criteria for Transfer of Areas **24-1**

Introduction to Transition Area

APHIS considers the Transition Area to be between the quarantine area and the noninfested area. The quarantine area is characterized by a virtually continuous gypsy moth population that often reaches outbreak levels. The noninfested area lacks an established gypsy moth population. The transition area is usually characterized by discontinuous, low-density gypsy moth populations that do not reach outbreak levels. The purpose of this section is to provide guidelines for APHIS activities in the transition area

Therefore, this section contains information on the following topics:

- Background information on the concept of the transition area
- Criteria for transferring an area from the transition area to the quarantine area
- Regulatory activities in the transition area
- Survey activities in the transition area

Previously, APHIS had not attempted to manage gypsy moth populations in the transition area. Now, APHIS will support a modified level of survey and appropriate regulatory activities in the transition area. Surveys will determine when a county should no longer be listed in the transition area but in the

generally infested quarantine area. Regulatory activities will prevent the shipment of infested items from the transition area.

NOTICE

The information in this section on the transition area applies only to the North American gypsy moth (NAGM) not to the Asian gypsy moth (AGM). For information on the AGM, consult the section on the AGM.

Significance of the Transition Area

Because of natural spread, each area within the transition area will probably become generally infested. The rate of natural dispersal has averaged about 13 miles per year. While this rate is a fairly accurate estimation along the entire border of the quarantine area, the rate of dispersal can vary considerably in specific areas.

APHIS policy is not to attempt to retard the natural dispersal of the gypsy moth. APHIS considers the transition area to be subject to repeated introductions from the quarantine area; therefore, infestations in the transition area are not usually considered isolated infestations. As a consequence, APHIS will not try to eradicate most gypsy moth infestations in the transition area.

APHIS will monitor the transition area by conducting surveys. The results of the surveys will determine when specific areas in the transition area become generally infested. At that time, these specific quarantine areas will become part of the quarantine area.

Generally, political divisions, such as counties, are used to define the transition area. The transition area usually extends approximately 50 miles beyond the border of the generally infested quarantine area. However, the transition area may vary from 25 to 75 miles depending on the borders of the political divisions.

Beyond the quarantine area and transition area, APHIS will continue to conduct detection surveys to find isolated infestations that will be eradicated.

Chapter 21

Transition Area Definitions

To fully understand the concept of the transition area, several terms must be defined; these terms appear below.

Artificial Dispersal

Artificial dispersal is dispersal by other than natural means; that is, artificial dispersal is dispersal through human activity such as the movement of infested commercial products, infested vehicles, and infested outdoor household articles.

Quarantine Area

A Quarantine Area is an area where gypsy moth is established, that is, maintaining a reproducing population. In theory, all Quarantine Areas should be in the Quarantine Area; however, due to various causes, such as processing delays and political challenges, the Quarantine Areas may not be in the Quarantine Areas. A quarantine area is an area under quarantine because plants, plant products, and other articles are likely to be infested. The movement of these possibly infested articles is regulated to prevent the spread of, in this case, gypsy moth.

Natural Dispersal

Natural dispersal is dispersal that occurs through natural means, such as the windblown movement of the first-instar larvae; natural dispersal is dispersal without the influence of human activity.

Noninfested Area

A noninfested area is an area outside of the quarantine area and beyond the transition area; the noninfested area is the area where the gypsy moth is not established.

Regulated Article(s)

A Regulated Article is any conveyance, container, or any other object or material capable of harboring or spreading plant pests.

For the gypsy moth, Regulated Articles include the following: nursery stock; logs; pulpwood; woodchips; Outdoor Household Articles (OHAs); mobile homes; and any other products, articles, or vehicles that present a high risk of artificial dispersal.

Transition Area

The transition area is the area beyond the border of the quarantine area (the quarantine area) into which the gypsy moth will spread by natural dispersal.

Chapter 22

Survey Activities

Contents

Introduction to Transition Area Survey Activities **22-1**
Trap Surveys **22-1**
Egg-Mass Surveys **22-2**

Introduction to Transition Area Survey Activities

Within the transition area, it is critically important to detect infestations as early as possible. Early detection of infestations will prevent the movement of infested articles from the transition area.

To detect infestations in the transition area, several survey types are useful:

- Egg-mass surveys
- Larval trapping
- Trap surveys

Trap Surveys

Initiating Factors

Trap surveys are performed to locate established populations in the transition area. If resources permit, the trap surveys are performed throughout the transition area; if resources are limited, trap surveys are performed in areas near the generally infested quarantine area.

In addition to locating infestations, the trap survey will help determine when a county in the transition area should be shifted to the quarantine area.

Recommended Trapping Density

The recommended trapping density is either of the following:

- 3-mile grid—equal to 1 trap per 9 square miles
- 5-km grid (3.1-mile)—equal to 1 trap per 9.6 square miles

Trapping Period

A trapping period from June 1st to October 1st is generally recommended. However, local climatic conditions will affect the starting and ending trapping dates.

Trap Type

In a trap survey, use either delta traps or milk-carton traps. For consistency and comparability of trapping results, use only one type of trap within a State.

Trap Servicing Frequency

As a minimum, service delta traps once a month. Servicing more frequently, once every two weeks, is recommended. If traps are likely to be vandalized, trap servicing once every two weeks is recommended.

Moth Identification

If the suspect moths were trapped where Asian gypsy moths are not likely to be introduced, send the suspect moths to a designated trained identifier.

Egg-Mass Surveys

Initiating Factors

Egg-mass surveys are desirable when: 1) egg masses are the only life stage present; and 2) populations are high enough to make the effort worthwhile.

A basic problem with egg-mass surveys is that egg-mass surveys usually will not detect low-level populations.

Egg-Mass Survey Methods

The two egg-mass survey methods used are: 1) the targeted visual survey method; and 2) the small-plot method. Both these methods were described in *Other Survey Tools* on page 4-1.

Chapter 23

Transition Area Regulatory Activities

Contents

Introduction to Transition Area Regulatory Activities **23-1**
Inspections in High-Risk Areas **23-1**
Nurseries and Regulatory Activities **23-2**
Mills/Log Yards and Regulatory Activities **23-2**
Logging Operations and Regulatory Activities **23-2**
Christmas Tree Plantations and Regulatory Activities **23-2**

Introduction to Transition Area Regulatory Activities

To delay the long-distance spread of the gypsy moth, the policy of APHIS is to prevent the establishment of isolated infestations. Usually, isolated infestations result from artificial dispersal, not natural dispersal. Artificial dispersal is dispersal by human activity through the movement of infested articles, such as Outdoor Household Articles (OHAs) and commercial products. Articles likely to be infested and moved are listed as Regulated Articles. Therefore, to prevent artificial movement, APHIS enforces quarantines on Regulated Articles, which are likely to be infested, when they are moved from infested areas to noninfested areas. Because sites in the transition area may be infested or will soon be infested, APHIS will conduct appropriate regulatory activities in the transition area.

Inspections in High-Risk Areas

High-risk sites will require inspections under Compliance Agreements (CAs).

Several sites are, by their nature, high risk.

- Christmas tree plantations
- Mills/log yards
- Nurseries

Nurseries and Regulatory Activities

When infested nursery stock and plant products are distributed, it is extremely difficult to regain control of the situation. Therefore, nurseries in the transition area, particularly those dealing in preferred hosts, must be inspected often enough to ensure that infested material is not being shipped—at least once in the spring, after egg hatch when the larvae would be feeding; at least once in the fall, after egg laying.

Besides a visual examination of plant products and the growing plants, trapping should be done in the vicinity of the nursery to detect the presence of gypsy moth.

Some examples of plants and plant products that should be examined follow:

- Balled-in-burlap stock
- Bare-root stock (usually a minor problem)
- Containerized plants
- Garden structures (sheds, fences, posts, etc.)

Mills/Log Yards and Regulatory Activities

Mills often receive or ship timber with attached bark; in addition, mills often ship finished products, such as boards and posts, with attached bark. The attached bark may harbor egg masses. The mills must be under CAs. Trapping is desirable near mills to detect the presence of the gypsy moth.

Logging Operations and Regulatory Activities

Logging operations must be surveyed under CAs. During the examination of a logging site, examine both felled trees and standing trees to detect the presence of gypsy moth.

Christmas Tree Plantations and Regulatory Activities

Christmas tree plantations must be examined to detect the presence of gypsy moth. A common means of dispersal for the gypsy moth is the movement of Christmas trees infested with egg masses to noninfested areas.

Chapter 24

Criteria for Transfer of Areas

Contents

Criteria for Transfer of Areas from the Transition Area **24-1**
- Trap Survey Results (Male Moths Alone) **24-1**
- Trap Survey and Other Survey Results **24-1**

Updating the Transition Area Map **24-2**
Logging Operations and Regulatory Activities **24-2**
State and National Parks and Regulatory Activities **24-3**

Criteria for Transfer of Areas from the Transition Area

The decision to transfer an area from the transition area to the quarantine area will be based on the detection of a sufficient number of male moths and/or other life stages to support a State and Federal consensus that the area is indeed generally infested.

Trap Survey Results (Male Moths Alone)

When more than 10 male moths are caught in the majority of traps placed throughout the area for 2 consecutive years, consider transferring the infested area from the transition area to the quarantine area.

Remember, the transfer will require consensus between Federal and State officials.

Trap Survey and Other Survey Results

When: 1) adult trapping captures multiple male moths; and 2) either egg-mass surveys or larval trapping detect a life stage other than the adult, consider transferring the infested area from the transition area to the quarantine area. Adult trapping should show 10 or more male moths caught in the majority of the traps placed throughout the area. The presence of a life stage other than the adult moth confirms the existence of a reproducing population.

Remember, the transfer will require consensus between Federal and State officials

Egg-Mass Survey Results

When multiple egg masses are detected as the result of an egg-mass survey, consider the transfer of an infested area in transition area to the quarantine area.

Remember, the transfer will require consensus between Federal and State officials.

Table 24-1 Trap Survey and Other Survey Results

If the adult trapping detects	If the other survey detects:	Then:
Less than 10 moths in the majority of traps	No other life stages	? (Do nothing?)
	Another life stage	? Consider transfer to transition area
More than 10 moths in the majority of traps	No other life stages	?
	Another life stage	? Consider transfer to transition area

If the suspect moths were trapped where Asian gypsy moths are likely to be introduced, send the suspect gypsy moths to the Otis Methods Center for DNA analysis:

Otis Plant Methods Center
Building 1398
Otis ANGB, MA 02542

Updating the Transition Area Map

After a decision has been reached, immediately report all transfers to Invasive Species and Pest Management, Riverdale, MD. Using this new information, Invasive Species and Pest Management will then develop transition area maps showing the quarantine area, the current transition area, and noninfested areas.

On the transition area maps, colors will indicate the status of areas:

- Red—quarantine area
- Yellow—transition area
- White—noninfested area

Logging Operations and Regulatory Activities

Logging operations must be surveyed under Compliance Agreements (CAs). During the examination of a logging site, examine both felled trees and standing trees to detect the presence of gypsy moth.

State and National Parks and Regulatory Activities

State and National Parks must be examined to detect the presence of gypsy moth. A common means of dispersal for the gypsy moth is the movement of infested vehicles at the parks.

Chapter 25

Asian Gypsy Moth

Contents

Asian Gypsy Moth Background **25-1**
Asian Gypsy Moth Policy **25-2**
Asian Gypsy Moth Documents **25-2**
- Asian Gypsy Moth Emergency Program Manual **25-2**
- Ship Inspection Guidelines – Asian Gypsy Moth **25-2**
- Asian Gypsy Moth (AGM) Vessel Alert List **25-2**
- APHIS Factsheet – Asian Gypsy Moth **25-2**

Asian Gypsy Moth Background

The Asian gypsy moth (AGM) is a strain of the gypsy moth, *Lymantria dispar*, found in Asia which has some, if not all, of the following characteristics:

- Broader host range
- Faster rate of development
- Females capable of strong, directed flight
- Reduced chill requirement before egg hatch
- Tendency to oviposit near light sources

The AGM will probably successfully establish because of its broader host range; in addition, defoliation may increase as AGM or its hybrids exploit hosts of marginal value to the European gypsy moth currently in North America.

Because the AGM females are capable of strong, directed flight, there would be increased population mobility and an increased rate of natural spread

Because AGM females tend to oviposit near light sources, the “nuisance” factor of the gypsy moth would increase.

Asian Gypsy Moth Policy

APHIS has adopted the following policy on the AGM.

- If the AGM is introduced, APHIS will seek to eradicate the infestation
- APHIS will exclude the AGM by lowering the risks at the points of origins and at the points of arrival
- APHIS will monitor ports and other high-risk sites to immediately detect introductions
- APHIS will support research using diagnostic genetic markers

Asian Gypsy Moth Documents

Asian Gypsy Moth Emergency Program Manual

At present, the procedures to deal with the Asian Gypsy Moth are in a separate document, the *Asian Gypsy Moth Emergency Program Manual*. The *Asian Gypsy Moth Emergency Program Manual* contains information on survey, regulatory, and control procedures.

Ship Inspection Guidelines – Asian Gypsy Moth

For information on procedures for identifying high-risk vessels and procedures for handling the high-risk vessels, refer to Special Procedures for Suspect Asian Gypsy Moth (AGM) Ships.

Asian Gypsy Moth (AGM) Vessel Alert List

For a list of vessels, refer to 2011 Asian Gypsy Moth (AGM) High-Risk Vessel List (Certificate Required) – Russia.

APHIS Factsheet – Asian Gypsy Moth

For basic information on AGM, refer to *APHIS Factsheet – Asian Gypsy Moth*.

Appendix

A

Appendix A

Leaflets and Other Materials on the Gypsy Moth

To provide information on the gypsy moth, various leaflets and pamphlets are available from State and Federal agencies. Among the leaflets and pamphlets suitable for use are the following materials:

- Gypsy moth—Forest Insect and Disease Leaflet 162, United States Department of Agriculture Forest Service. This leaflet is available at the following Web site
  http://www.na.fs.fed.us/SPFO/pubs/fidls/gypsymoth/gypsy.htm
- Gypsy moth—Pest Alert NA-FB/P-21, United States Department of Agriculture Forest Service
- *Comparison of Pesticides for Gypsy Moth Control*—this leaflet is available at the following Web site.
  http://www.forestpests.org/PAlertGM/PAlertGM.html
- *Gypsy Moth Nucleopolyhedrosis Virus*—this pesticide fact sheet is available at the following Web site.
  http://www.fs.fed.us/ne/morgantown/4557/gmoth/manag/gypchek.html

Appendix

B

Appendix B

Map of Generally Infested Areas

Each year an updated map showing quarantine areas is issued. This updated map is to be considered part of the *Gypsy Moth Program Manual*.

To view a map showing quarantine areas in the United States, click here.

To view a list of quarantine areas in Canada, click here.

Appendix

C

Appendix C

How to Assemble Traps

Contents

Materials for Assembling Delta Traps **C-1**
Procedures for Assembling Delta Traps **C-2**
Materials for Assembling Milk Carton Traps **C-5**
Procedures for Assembling Milk Carton Traps **C-5**

Materials for Assembling Delta Traps

Gather the following materials:

- Delta trap
- Disparlure dispenser (string or strip)
- Paper clips
- Stapler
- Staples, wire, hammer, nails, or string for hanging the trap

Procedures for Assembling Delta Traps

Use the following instructions for assembling the delta trap.

Step 1: Staple the Lure to the “X” on the Nonsticky Side

Step 2: Pull the Trap Open; Pull Sticky Sides Away from Each Other

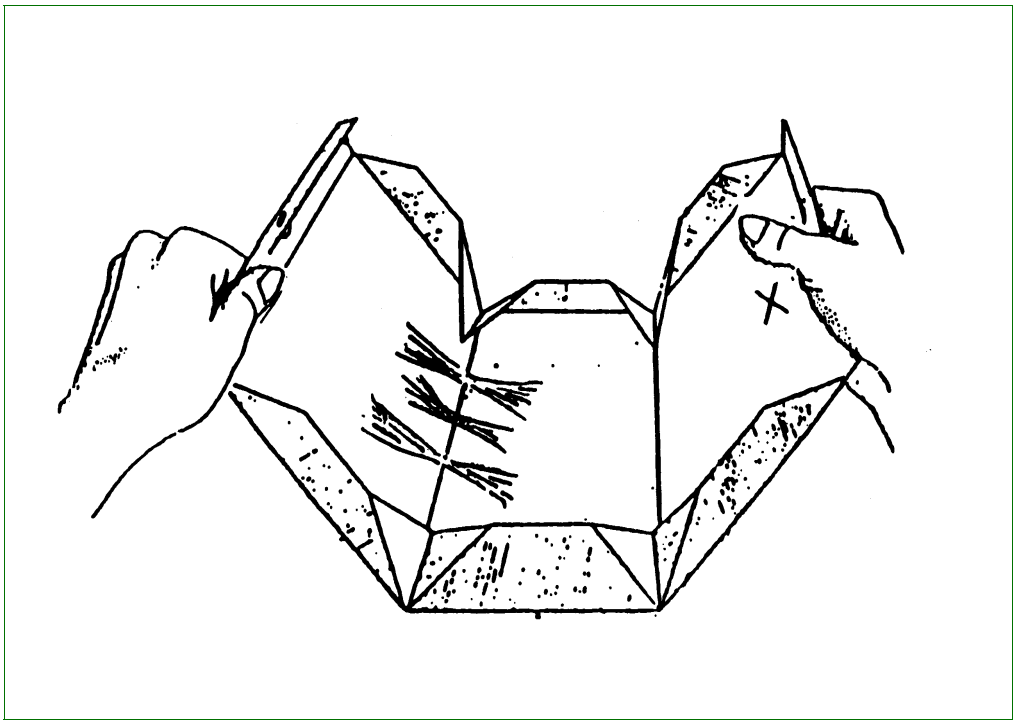

Figure C-1 Example of Step 2 for Assembling Delta Traps

Step 3: Fold the Trap into a Triangle

Fold top flap over and staple or paper clip together

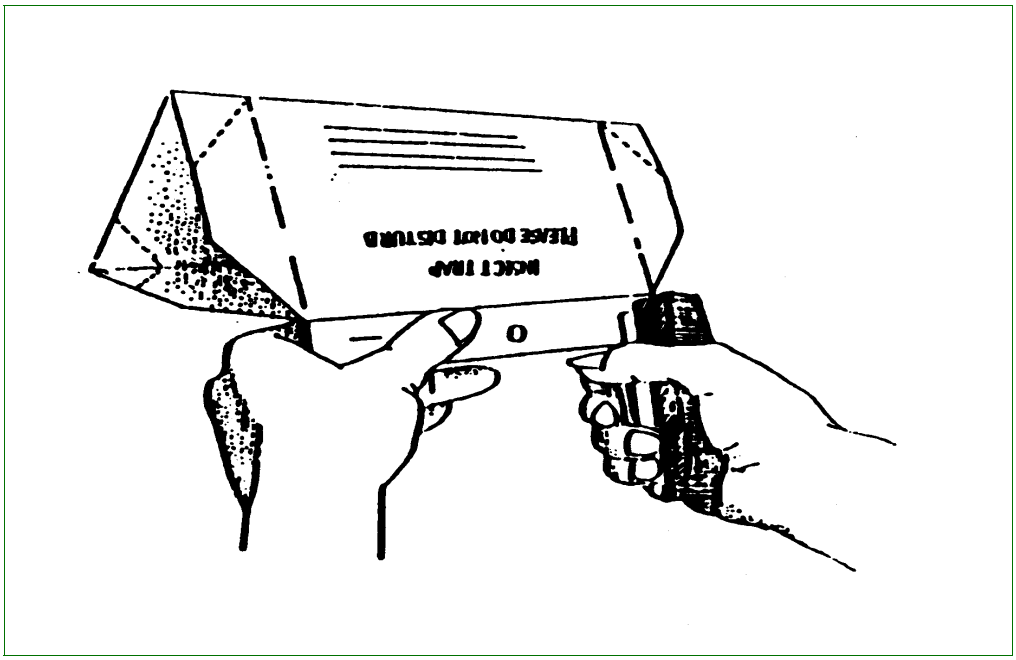

Figure C-2 Example of Step 3 for Assembling Delta Traps

Step 4: Fold In Corners at Both Ends

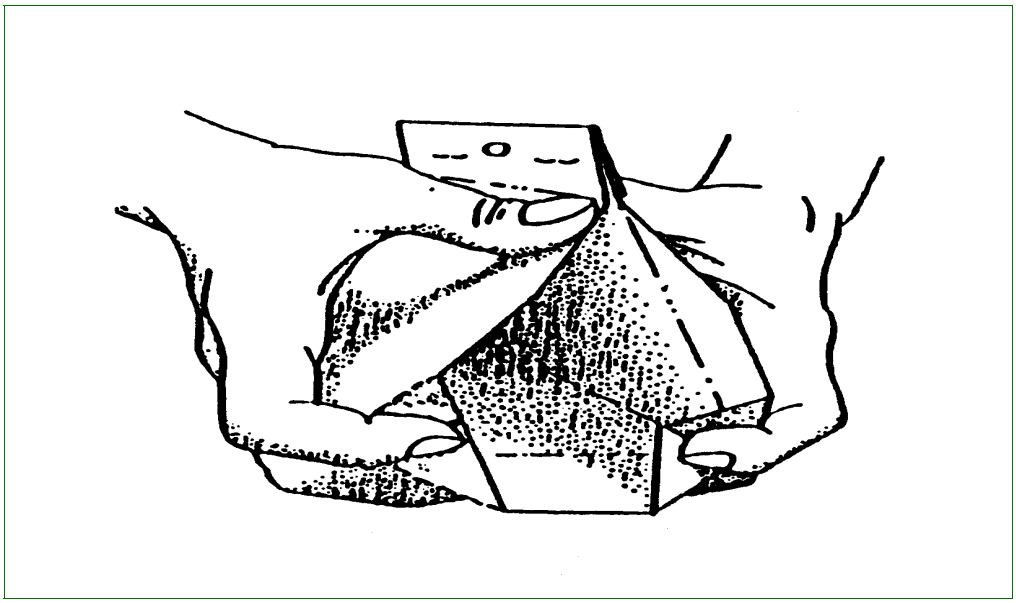

Figure C-3 Example of Step 4 for Assembling Delta Traps

Step 5: Fold In Sides at Both Ends

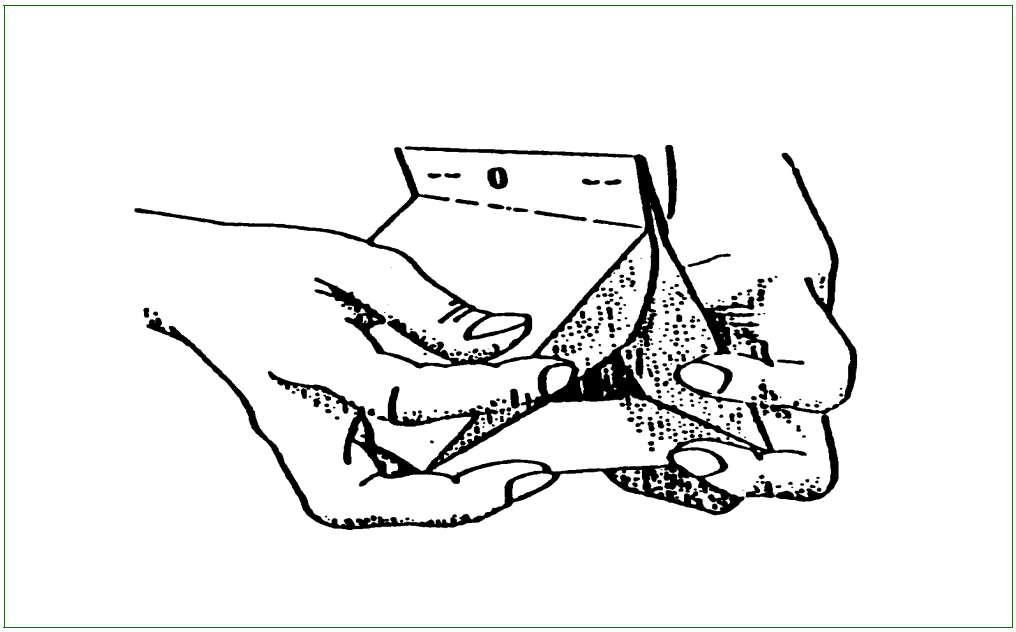

Figure C-4 Example of Step 5 for Assembling Delta Traps

Step 6: Hang or Staple Trap in Place (4 to 5 Feet Off the Ground)

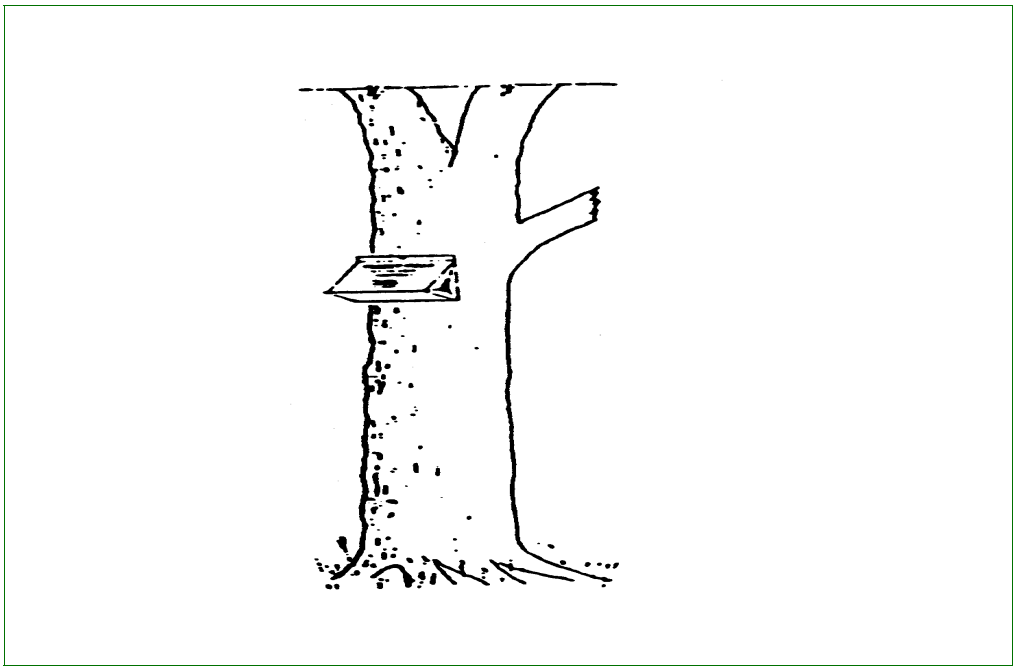

Figure C-5 Example of Step 6 for Assembling Delta Traps

Materials for Assembling Milk Carton Traps

Gather the following materials to assemble a milk carton trap:

- Cotton twine (20 ply or stronger) or flexible wire for hanging trap
- DDVP strip (insecticide also called Vapona strip)
- Disparlure dispenser
- Seven-inch twist tie (available in most garden stores)
- Stapling pliers
- Trap body
- Trap hood

Procedures for Assembling Milk Carton Traps

Use the following instructions for assembling the milk carton trap.

Step 1: Pop Out the Paper Inserts From the Eight Entry Ports of the Trap Body and Crease Body Lines Several Times

Step 2: Open, Invert, then Fit the Bottom Together (A)

Fasten the bottom with stapling pliers (B).

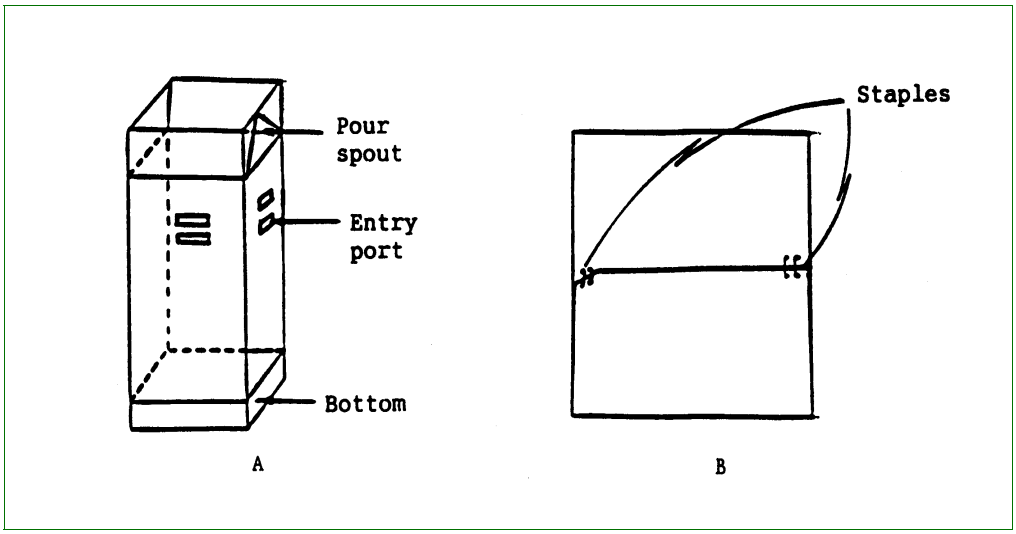

Figure C-6 Example of Step 2 for Assembling Milk Carton Traps

Step 3: Pop Out the Center Insert of the Trap Hood

Crease all tabs up, and crease all solid lines. Slide the hood (shiny side up) over the body from the top until it goes below the slits above the trap entrances. Slide the hood upwards so the semicircular tabs on the hood slide into the slits. Staple the tabs to the trap body with stapling pliers.

Step 4: Staple the Insecticide Strip (DDVP strip also called Vapona strip) onto One End of a Seven-Inch Strip of Twist Tie

Use the outer package or rubber gloves to handle the insecticide strip. Handle the insecticide strip as little as possible. Staple the disparlure perpendicular to the twist tie and about 2 1/2 inches above the insecticide strip. Fold over the top inch of the twist tie.

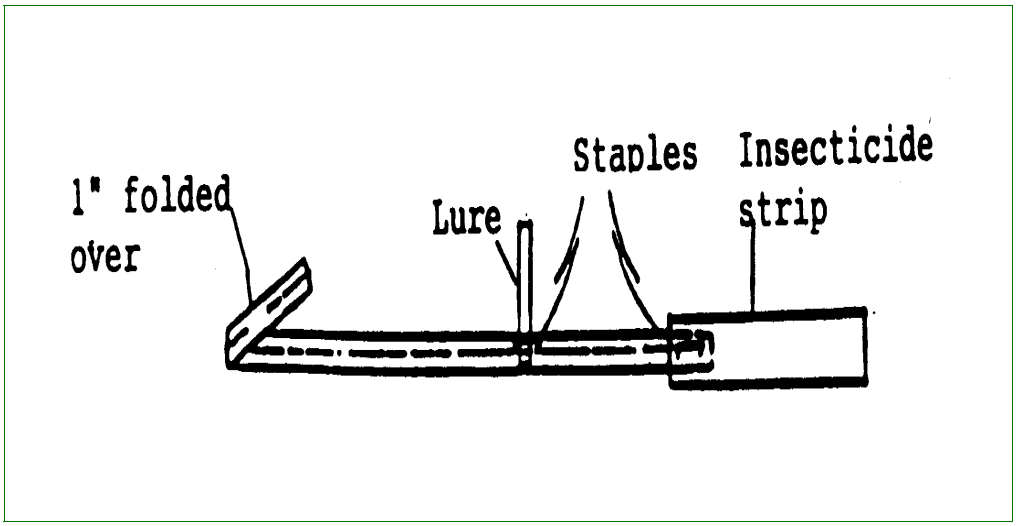

Figure C-7 Example of Step 4 for Assembling Milk Carton Traps

Step 5: Insert the Twist Tie into the Trap Body Leaving the Top Inch Folded Over the Trap Top

Place the insecticide and disparlure near the center of the trap. Place the top of the twist tie just behind where the pour spout will open. Staple the twist tie to the top half of the milk carton that is not the pour spout.

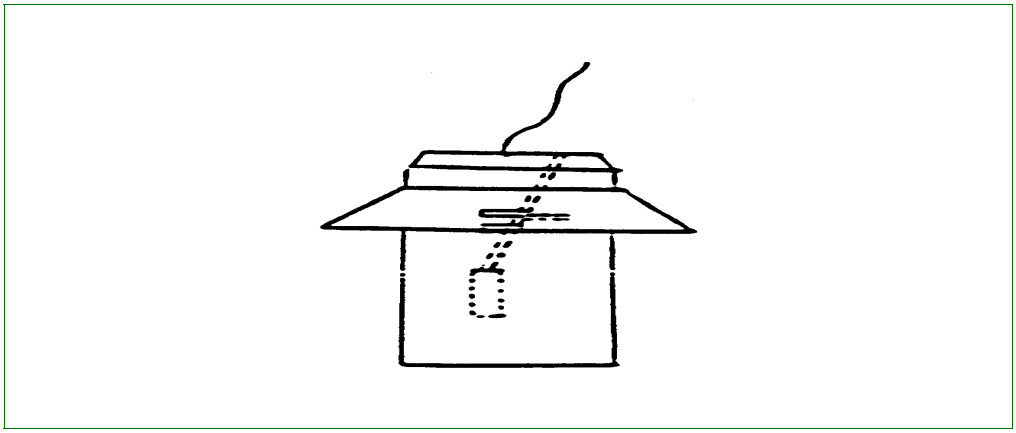

Figure C-8 Example of Step 5 for Assembling Milk Carton Traps

Step 6: Fold the Top Ends of the Trap in Toward the Center of the Trap Making the Two Sides Parallel to One Another

The end with the crease is the pour spout—do not staple the top portion of the pour spout end. To close the trap, staple the top of the other half of the trap and use a binder clip or twist tie to secure the pour spout.

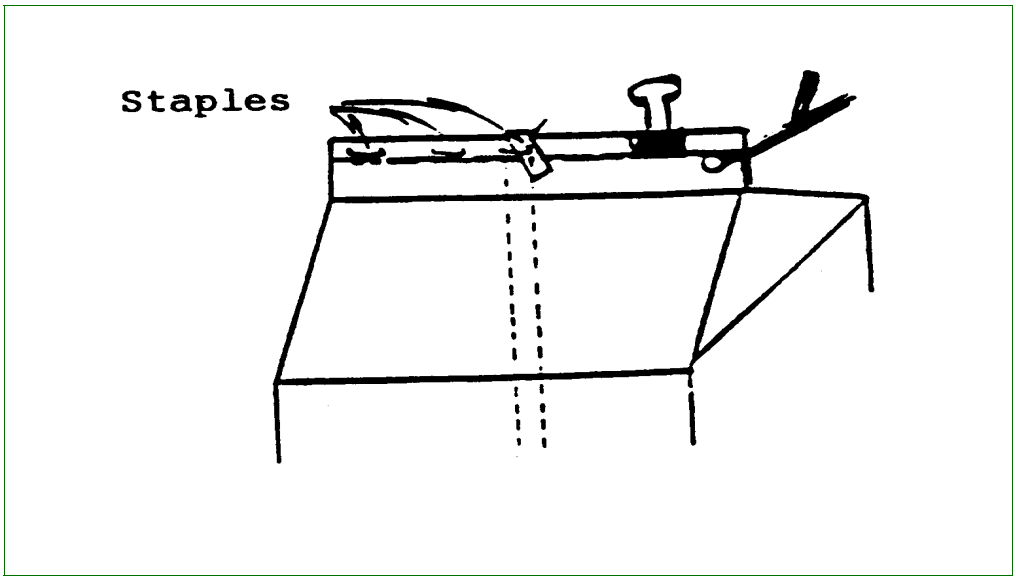

Figure C-9 Example of Step 7 for Assembling Milk Carton Traps

Step 7: Staple a 24-Inch Length of Cotton Twine (20 Ply or Stronger) to the Top Center of the Milk Carton

Hang the trap 4 to 5 feet above ground level away from obstructive branches and foliage.

To service the trap, open the pour spout, empty trap contents, and close the spout.

Appendix

D

Appendix D

GM Data Collection

Contents

Introduction **D-1**
Detection Surveys **D-2**
- Gypsy Moth 2013 Detection Survey Template **D-2**
- Standard Template Fields **D-3**
- Custom Fields for Gypsy Moth 2013 Detection Survey Template **D-3**

Delimiting Surveys **D-4**
- Gypsy Moth 2013 Delimiting Survey Template **D-4**
- Standard Template Fields **D-5**
- Custom Fields for Gypsy Moth 2013 Delimiting Survey Template **D-5**

Port And Waterway Surveys **D-6**
- Gypsy Moth 2013 Port and Waterway Monitoring Templates **D-6**
- Standard Template Fields **D-7**
- Custom Fields for Gypsy Moth 2013 Port and Waterway Monitoring Templates **D-7**

Adding Custom Fields **D-8**
Gypsy Moth Regulatory Activities **D-8**
Quality Assurance **D-8**
Comments/feedback **D-8**
Gypsy Moth Trap Sheet – 2013 Survey **D-9**

Introduction

The Integrated Plant Health Information System (IPHIS) will be the official system to collect gypsy moth survey data for FY 2013.[1]

- All data from PPQ and PPQ-funded gypsy moth surveys **must** be entered into IPHIS using this template or a customized version of this template, with the exception of those states currently using the Slow-the-Spread (STS) database to record all of their data.
- For those States using IPHIS, survey data does **not** have to go into the National Agricultural Pest Information System (NAPIS) this year. However, if you want a complete Pest Tracker map for your state, you will have to continue using NAPIS. If you choose to use NAPIS, **you must also enter data into IPHIS** since the two systems do not interact at this point.

1 With the exception of those States currently using the Slow-the-Spread database.

- Template content is the same as last year; however, templates have been updated to represent the current survey year. This is necessary since old templates **cannot** be hidden in IPHIS at this point and relying on just version numbers can be confusing.

Detection Surveys

The FY 2013 detection survey IPHIS template is called “Gypsy Moth 2013 Detection Survey” (template version 38). A trap sheet to record data has been created for your convenience (see Gypsy Moth Trap Sheet – 2013 Survey).

Gypsy Moth 2013 Detection Survey Template

See Figure D-1 for an example.

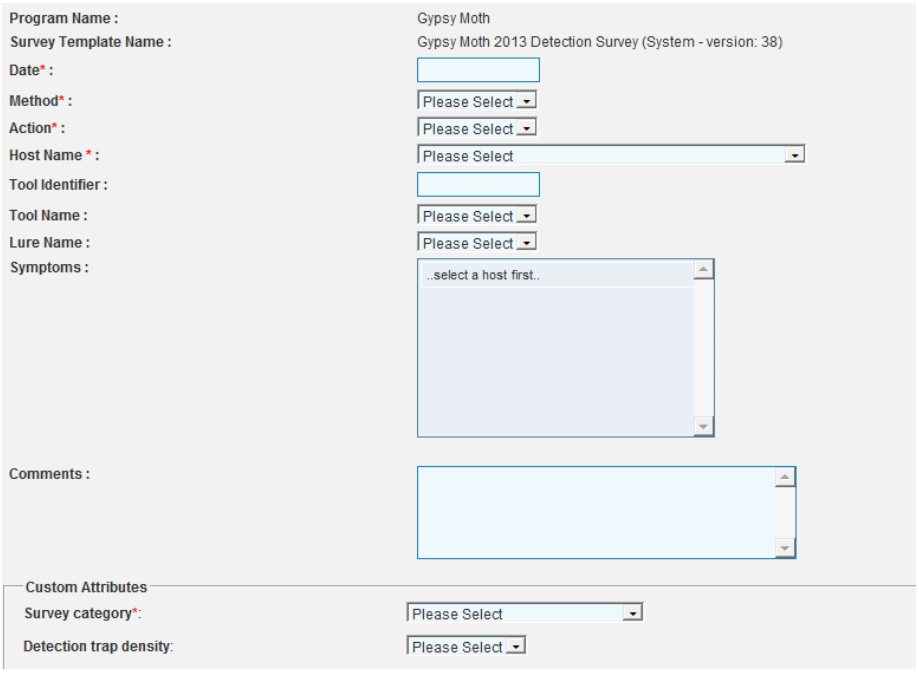

Figure D-1 Gypsy Moth 2013 Detection Survey Template

Standard Template Fields

- Method (required): Trapping, Visual
- Action (required)
  - If Trapping selected: Inaccessible, Install, Monitor, Remove (etc.), Replace (etc.)
  - If Visual selected: Count, Inaccessible, Inspect
- Host Name (required): Not applicable
  - Host names can be entered into the comment field or a custom field, if needed by an office. The decision to not list host names was based on several factors, including the large number of possible hosts; the fact that traps may be hung on poles, buildings, etc. in addition to host; and the identification skills of those setting traps and/or conducting visual inspections.
- Tool Identifier (optional): Can use to record additional trap identification information; trap number should be recorded in Site name.
- Tool Name (optional): Paper Delta Trap, 2 sticky sides; Milk Carton Trap; Tar paper or Burlap
  - Tar paper and burlap are used for larval surveys
  - Though an optional field, this information is useful for future supply ordering
- Lure Name (optional): Gypsy Moth Laminate Lure, Gypsy Moth String Lure
  - Though an optional field, this information is useful for future supply ordering
- Symptoms: Not active for gypsy moth
- Comments (optional)

Custom Fields for Gypsy Moth 2013 Detection Survey Template

The custom fields were selected to help better track what activities are being conducted in the field for program review and future planning. Though "Detection trap density" is optional, it is appreciated if surveyors fill in the information.

- Survey category (required): AGM-trapping, AGM-visual, EGM Category 1 (high risk), EGM Category 2 (moderate risk), EGM Category 3 (low risk), EGM Category S (special site), EGM-visual
  - EGM categories are based on the Gypsy Moth Manual
- Detection trap density (optional): 1/sq mi, 1/4 sq mi, 4/sq mi, 9/sq mi, 25 sq/mi, 36 sq/mi, Other

Delimiting Surveys

The FY 2013 delimiting survey IPHIS template is called “Gypsy Moth 2013 Delimiting Survey” (template version 39). A trap sheet to record data has been created for your convenience (see Gypsy Moth Trap Sheet – 2013 Survey).

Gypsy Moth 2013 Delimiting Survey Template

See Figure D-2 for an example.

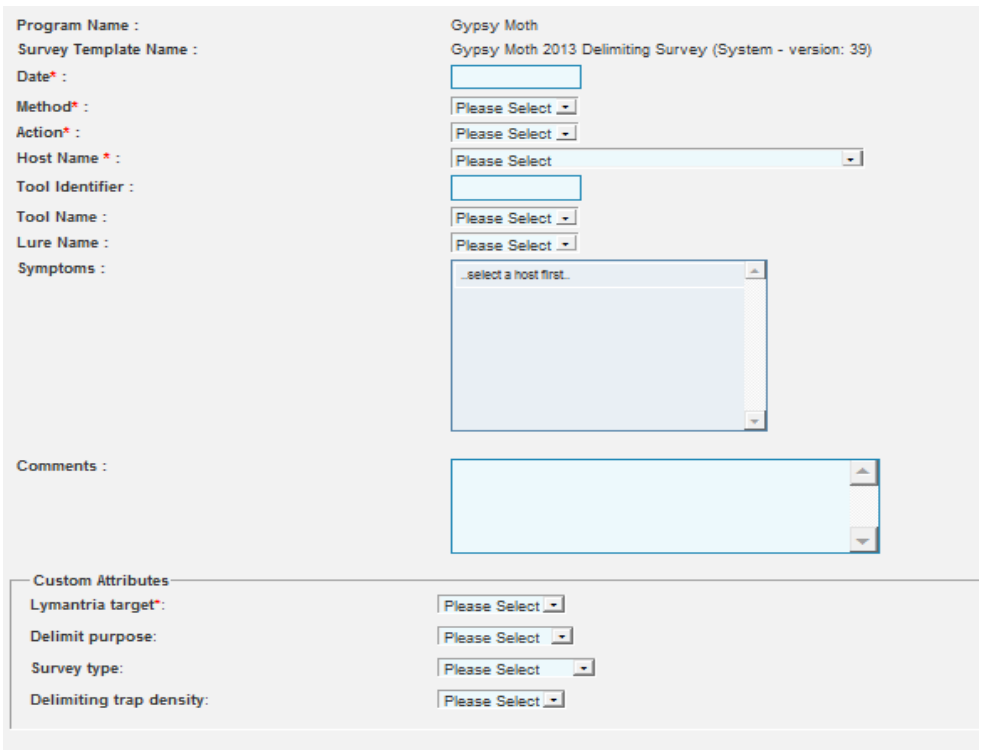

Figure D-2 Gypsy Moth 2013 Delimiting Survey Template

Standard Template Fields

- Method (required): Trapping, Visual
- Action (required)
  - If Trapping selected: Inaccessible, Install, Monitor, Remove (etc.), Replace (etc.)
  - If Visual selected: Count, Inaccessible, Inspect
- Host Name (required): Not applicable
  - Host names can be entered into the comment field or a custom field, if needed by an office. The decision to not list host names was based on several factors, including the large number of possible hosts; the fact that traps may be hung on poles, buildings, etc. in addition to host; and the identification skills of those setting traps and/or conducting visual inspections.
- Tool Identifier (optional): Can use to record additional trap identification information; trap number should be recorded in Site name.
- Tool Name (optional): Paper Delta Trap, 2 sticky sides; Milk Carton Trap; Tar paper or Burlap
  - Tar paper and burlap are used for larval surveys
  - Though an optional field, this information is useful for future supply ordering
- Lure Name (optional): Gypsy Moth Laminate Lure, Gypsy Moth String Lure
  - Though an optional field, this information is useful for future supply ordering
- Symptoms: Not active for gypsy moth
- Comments (optional)

Custom Fields for Gypsy Moth 2013 Delimiting Survey Template

The custom fields were selected to help better track what activities are being conducted in the field for program review and future planning. Though some of the fields are optional, it is appreciated if surveyors fill in the information.

- Lymantria target (required): AGM, EGM
- Delimit purpose (optional): General, Post-treatment, Pre-treatment
- Survey type (optional): Egg mass survey, Larval survey, Trapping
- Delimiting trap density (optional): 16/sq mi, 25 sq/mi, 36 sq/mi, Other

Port And Waterway Surveys

There are two port and waterway survey templates in IPHIS for gypsy moth in FY 2013: “Gypsy Moth 2013 Port and Waterway Monitoring Inside the Quarantine” (template version 40) and “Gypsy Moth 2013 Port and Waterway Monitoring Outside the Quarantine” (template version 41).

Gypsy Moth 2013 Port and Waterway Monitoring Templates

See Figure D-3 for an example (both templates look the same).

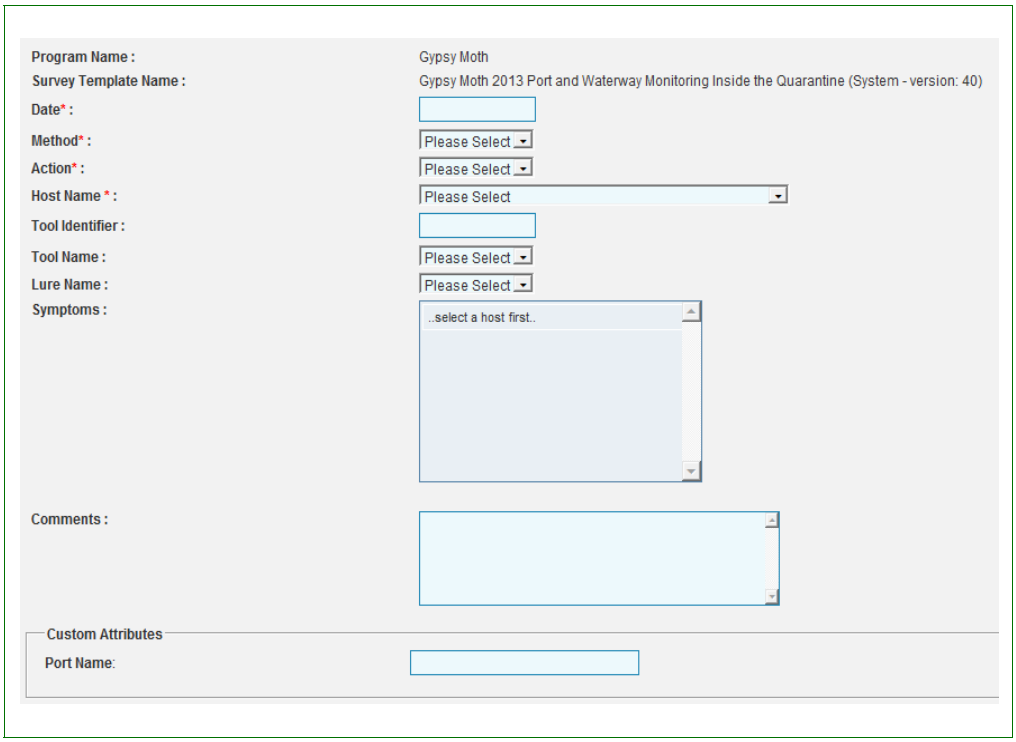

Figure D-3 Gypsy Moth 2013 Port and Waterway Monitoring Template

Standard Template Fields

- Method (required): Trapping, Visual
- Action (required)
  - If Trapping selected: Inaccessible, Install, Monitor, Remove (etc.), Replace (etc.)
  - If Visual selected: Count, Inaccessible, Inspect
- Host Name (required): Not applicable
  - Host names can be entered into the comment field or a custom field, if needed by an office. The decision to not list host names was based on several factors, including the large number of possible hosts; the fact that traps may be hung on poles, buildings, etc. in addition to host; and the identification skills of those setting traps and/or conducting visual inspections.
- Tool Identifier (optional): Can use to record additional trap identification information; trap number should be recorded in Site name.
- Tool Name (optional): Paper Delta Trap, 2 sticky sides; Milk Carton Trap; Tar paper or Burlap
  - Tar paper and burlap are used for larval surveys
  - Though an optional field, this information is useful for future supply ordering
- Lure Name (optional): Gypsy Moth Laminate Lure, Gypsy Moth String Lure
  - Though an optional field, this information is useful for future supply ordering
- Symptoms: Not active for gypsy moth
- Comments (optional)

Custom Fields for Gypsy Moth 2013 Port and Waterway Monitoring Templates

The custom field was selected to help better track what activities are being conducted in the field for program review and reporting.

- Port name (optional): This is a text field to help show what surveys support a certain port survey. Offices are encouraged to provide naming guidelines to their staff and do quality assurance on any data coming in to ensure correct spellings and/or abbreviations are used. A drop down list was not used since scrolling through the list would be cumbersome since there are so many ports in the U.S.

Adding Custom Fields

Because the system template will not meet everyone's needs, individual offices may add custom fields. Please keep in mind the following when adding custom fields:

- Please let your SPHD/Field Operations Gypsy Moth Manager know of any added custom fields so it can be evaluated for inclusion in the national system template for future years. If it works for one office, it may be useful for another.
- Keep in mind that adding custom fields can affect reporting. Please avoid adding custom fields that are similar to existing fields to avoid issues in reviewing data. If you need changes to an existing field, please let your SPHD/ Field Operations Gypsy Moth Manager know.

Gypsy Moth Regulatory Activities

All gypsy moth compliance agreements should be entered into IPHIS as soon as possible. The basic agreement is customizable. In addition, all compliance inspections should also be recorded in IPHIS. Instructions are available in IPHIS Message Forums>Gypsy Moth>Gypsy Moth Regulatory Data.

Quality Assurance

All offices are expected to review the data inputted into IPHIS for accuracy. This is essential to ensure the data in the system accurately portrays field activities so that reports are correct as these will be used for future program review and planning.

Comments/feedback

Data collection in IPHIS for gypsy moth is still growing. Therefore, it is still a developing process. If you have questions, comments, or suggestions for the Gypsy Moth 2013 templates, please elevate them through the appropriate channels for consideration. Thank you!

Gypsy Moth Trap Sheet – 2013 Survey

Gypsy Moth Trap Sheet – 2013 Survey

1. **Date Set***:_____ **Date Serviced***: _____ **Date Picked up***: _____ **Trap Fallen/Replaced Date**: _____
   Sampled (Y/N): _____ **Sampled (Y/N)**: _____ **Trap Fallen/Replaced Date**: _____
   No. Specimens: _____ **No. Specimens**: _____
2. **Location – Site***: _____
3. **Contact Name** (if known): _____ **Phone** (if known): _____
4. **Property Type Information** (Campground, Park, Sawmill, Nursery, etc.): _____
5. **Address / City / Zip** (if known): _____ / _____ /_____
6. **County***: _____ 7. **Comments:** _____
8. **Latitude/Longitude***: _____ / _____
   (ex. 43.123456 / -91.123456)
9. **Detection Surveys Only**

   Survey category*:
   ☐AGM-Trapping ☐AGM-Visual ☐EGM-Visual
   ☐EGM Category 1 (high) ☐EGM Category 2 (moderate)
   ☐EGM Category 3 (low) ☐EGM Category S (special site)

   Detection Trap Density:
   ☐1 / 4 sq mi ☐1 / sq mi ☐4 / sq mi ☐9 / sq mi
   ☐25 / sq mi ☐36 / sq mi ☐Other
10. **Delimiting Surveys Only**

    Lymantria target*: ☐AGM ☐EGM

    Delimit purpose: ☐Pre-treatment ☐Post-treatment ☐General

    Survey type: ☐Egg mass survey ☐Larval survey ☐Trapping

    Delimiting Trap Density:
    ☐16 / sq mi ☐25 / sq mi ☐36 / sq mi ☐Other

Written or Sketched Location Details (Optional)

Last revision date: 03/05/2013

* indicates required information

Figure D-4 Gypsy Moth Trap Sheet – 2013 Survey

Appendix

E

Appendix E

Compliance Agreements (CAs)

Contents

PPQ Form 519, Compliance Agreement (CA) **E-1**
CA—Loggers/Log, Pulpwood, and Wood Chip Shippers **E-3**
CA - Receiving Mills **E-4**
CA - Nurseries/Christmas Tree Plantations **E-6**
CA - Qualified Certified Applicators (QCAs) **E-7**
CA - Shippers **E-9**

PPQ Form 519, Compliance Agreement (CA)

Each Compliance Agreement (CA) will be documented on PPQ Form 519 - Compliance Agreement. An example of PPQ Form 519 is on the following page.

The agreement section on PPQ Form 519 may reference attached information. The attached information may be adapted to meet local conditions

Following the PPQ Form 519 on the following page is material which will produce (with modification) individual CAs for specific commercial establishments:

Table E-1 Compliance Agreements

Commercial Establishment	Page
Loggers/Log Shippers	page 3
Receiving Mills	page 4
Nursery/Christmas Tree Farms	page 6
QCAs	page 7
Shippers	page 9

According to the Paperwork Reduction Act of 1995, an agency may not conduct or sponsor, and a person is not required to respond to, a collection of information unless it displays a valid OMB control number. The valid OMB control numbers for this information collection are 0579-0054, 0088, 0129, 0198, 0257, 0310, 0317, 0322, 0337, 0346, 0363, and 0369. The time required to complete this information collection is estimated to average 1.25 hours per response, including the time for reviewing instructions, searching existing data sources, gathering and maintaining the data needed, and completing and reviewing the collection of information.	OMB APPROVED 0579-0054/0088/0129/ 0198/0257/0310/0317/ 0322/0337/0346/0363/ 0369

UNITED STATES DEPARTMENT OF AGRICULTURE ANIMAL AND PLANT HEALTH INSPECTION SERVICE PLANT PROTECTION AND QUARANTINE	COMPLIANCE AGREEMENT
1. NAME AND MAILING ADDRESS OF PERSON OR FIRM	2. LOCATION

3. REGULATED ARTICLE(S)

4. APPLICABLE FEDERAL QUARANTINE(S) OR REGULATIONS

5. I / WE AGREE TO THE FOLLOWING:

6. SIGNATURE	7. TITLE	8. DATE SIGNED
The affixing of the signatures below will validate this agreement which shall remain in effect until canceled, but may be revised as necessary or revoked for noncompliance.		9. AGREEMENT NUMBER
		10. DATE OF AGREEMENT

11. PPQ/CBP OFFICIAL (NAME AND TITLE)	12. ADDRESS
13. SIGNATURE	
14. U.S. GOVERNMENT/STATE AGENCY OFFICIAL (NAME AND TITLE)	15. ADDRESS
16. SIGNATURE	

PPQ FORM 519
SEP 2012

All *previous editions are obsolete.*

Figure E-1 Sample of PPQ Form 519—Compliance Agreement

CA—Loggers/Log, Pulpwood, and Wood Chip Shippers

Item #1: Name of Establishment

Item #2: Location of Establishment

Item #3: (Logs, Pulpwood, and/or Wood Chips) moving from a generally infested area to locations outside of the generally infested area.

Item #4: Gypsy Moth Quarantine, 7CFR 301.45

Item #5:

A. The establishment identified above hereby enters into a Compliance Agreement with the U. S. Department of Agriculture under the provisions of the gypsy moth quarantine. The establishment has chosen to exercise the option of self-inspection of the Regulated Article(s) listed above. The Regulated Article(s) will only move from the establishment, located inside the generally infested area, to receiving mills, located outside of the generally infested area, if the receiving mills are under Compliance Agreement.

B. After receiving training, employees of the establishment will be authorized to inspect and to complete inspection documents. The employee(s) of the establishment to be trained and certified will be (the following:)

   (Add names of the employees to the CA.)

C. In accordance with instructions in the Regulatory Section of the Gypsy Moth Program Manual, a trained employee of the establishment will (1) inspect the regulated article(s) no more than 5 days prior to the date of movement, (2) treat and/or remove all life stages of the gypsy moth, so that no viable individuals remain, and (3) complete and distribute copies of the inspection document. The trained employee of the establishment will distribute the copies of the inspection document as follows:

   a. The original of the inspection document will be attached to the waybill or other shipping document accompanying the shipment. The carrier will surrender the original inspection document to the consignee at destination.

   b. One copy of the inspection document will be retained by the establishment.

   c. Another copy of the inspection document will be forwarded to the Plant Protection and Quarantine Office specified in Item #13.

D. During the five months of April through August, the establishment will safeguard Regulated Article(s) after certification from infestation or reinfestation. Safeguards will be (1) storage before shipment and (2) movement directly through regulated areas without stopping (except for refueling or for traffic conditions, such as traffic lights and stop signs). Regulated Articles exposed during transit will be treated as infested articles.

E. PPQ will provide the establishment with (1) appropriate sections of the Gypsy Moth Program Manual, (2) training, and (3) updated information. Among other information, the updated information will include (1) quarantine reports, (2) a listing of generally infested areas, and (3) current maps of the generally infested area when available.

F. (Log, pulpwood, and/or wood chip) staging or holding areas must be (set suitable distance) away from standing trees.

G. During the five months of April through August, the establishment will safeguard Regulated Articles when the Regulated Articles originate in a non-infested area and are transhipped through the generally infested area. The Regulated Articles must move directly through regulated areas without stopping (except for refueling or for traffic conditions, such as traffic lights and stop signs). Regulated Articles exposed during transit will be treated as infested articles.

H. PPQ and State Department of Agriculture inspectors retain the right to (1) make spot checks of shipments, (2) monitor inspection procedures and (3) examine records of shipments to locations outside of the generally infested area.

I. If the establishment fails to comply with provisions of this agreement and/or the gypsy moth regulations, this Compliance Agreement will be canceled. When a cancellation occurs, each shipment will require individual inspection by a PPQ or State inspector; in addition, cancellation could result in the assessment of civil penalties.

J. The U. S. Department of Agriculture will furnish the service of the PPQ inspectors without cost. Other than the service of the PPQ inspector, the U. S. Department of Agriculture will not be responsible for any costs or charges incident to inspections or compliance with the quarantine.

CA - Receiving Mills

Item #1: Name of Receiving Mill

Item #2: Location of Receiving Mill

Item #3: (Logs, Pulpwood, and/or Wood Chips) moving from a generally infested area to a mill located in a non-infested area.

Item #4: Gypsy Moth Quarantine, 7CFR 301.45

Item #5:

A. The receiving mill, specified in Item #1, will accept shipments of (logs, pulpwood, or wood chips) from a generally infested area only when the shipments are accompanied by a (1) USDA Certificate (?), (2) USDA Limited Permit, or (3) signed Accurate Statement, which will state that the product(s) have been inspected and/or treated and are free of all life stages of gypsy moth.

B. Only the receiving mill, located as specified in Item #2, will receive and process shipments of Regulated Articles from generally infested areas.

C. During the months of April through August, the receiving mill on the site specified in Item #2 will destroy, process, or treat (specify method) within 5 days all bark which come from generally infested areas. During the remainder of the year, the receiving mill will destroy, process or treat the bark on a timely basis. (A map of generally infested areas is attached.)

D. PPQ and State inspectors will have unlimited access to holding areas for the Regulated Article(s) and to the environs of the receiving mill in order to (1) conduct gypsy moth detection surveys, (2) inspect shipments, and (3) monitor compliance.

E. The receiving mill, specified in Item #1, will be responsible for eradicating any gypsy moth infestation on the premises or in the environs of the receiving mill that result from receiving infested (logs, pulpwood, or wood chips).

F. The U. S. Department of Agriculture will furnish the service of the PPQ inspectors without cost. Other than the service of the PPQ inspectors, the U. S. Department of Agriculture will not be responsible for any costs or charges incident to inspections or compliance with the quarantine.

G. PPQ and the State Department of Agriculture retain the right to check compliance, at their discretion, by conducting inspections and by examining records. Examining records will involve the examination of (1) receiving records, (2) shipping documents, and (3) inspection documents on regulated articles received from generally infested areas.

H. Failure to comply with the gypsy moth regulations and/or the provisions of this Compliance Agreement may result in cancellation of this Compliance Agreement and/or assessment of civil penalties.

CA - Nurseries/Christmas Tree Plantations

Item #1: Name of Establishment

Item #2: Location of Establishment

Item #3: Trees without roots (e.g., Christmas trees), trees with roots, and shrubs with roots and persistent woody stems, unless they are greenhouse grown through the year.

Item #4: Gypsy Moth Quarantine, 7 CFR 301.45

Item #5:

A. The establishment, specified in Item #1, will only ship Regulated Articles out of the generally infested area when the Regulated Articles are determined to be free of all viable gypsy moth life stages.

B. As specified in the Gypsy Moth Program Manual, determination of freedom from all viable gypsy moth life stages will be based upon (1) annual visual survey and treatment, if necessary, of the premises and environs of the establishment and/or (2) treatment of the Regulated Articles.

C. If hazardous conditions exist, an Emergency Action Notification (PPQ Form 523) will be issued indicating the required treatment. The establishment is responsible for applying the required treatment. After successful application of the treatment, the Emergency Action Notification will be rescinded and Regulated Articles may be certified and shipped out of the generally infested area.

D. The U. S. Department of Agriculture will furnish the service of the PPQ inspectors without cost. Other than the service of PPQ inspectors, the U. S. Department of Agriculture will not be responsible for any costs or charges incident to inspections or compliance with the quarantine.

E. To allow movement of Regulated Articles that are free of all gypsy moth life stages from the generally infested area, the establishment may use the following: (1) certificates for attachment to shipping documents, (2) pre-printed shipping labels, and/or (3) rubber stamps. All certificates, preprinted shipping labels, or certificate stamps that PPQ approves and provides will remain government property. The establishment is accountable for them and must safeguard them against loss and improper use.

F. To obtain an order of printed shipping labels, the establishment will send a written request for each order to the PPQ official specified in

Item #12. Each written request will include (1) the number of shipping labels that will bear the certificate number and (2) the name and address of the printer.
The establishment will direct the printer to (1) notify the PPQ official when each order has been completed, and (2) print each certificate number in a conspicuous place on the shipping tags.

G. If receiving Regulated Articles from other establishments within the generally infested areas, the establishment will (1) only accept Regulated Articles accompanied by a valid PPQ certificate or (2) immediately arrange to have Regulated Articles inspected by either a PPQ or State inspector. If receiving Regulated Articles from establishments outside the generally infested area for shipment outside the generally infested area, the establishment will only accept Regulated Articles with documents showing the point of origin.

H. Before the establishment changes any procedures or practices, the establishment must contact the PPQ official specified in Item #12. The PPQ official in Item #12 (and the State inspector) will answer questions on 7 CFR 301.45, this Compliance Agreement, procedures and practices, and previous instructions.

I. The establishment will notify the PPQ official specified in Item #12 of any personnel changes which may effect the handling of the Regulated Articles.

J. PPQ and State Department of Agriculture inspectors retain the right to (1) make spot checks of shipments, (2) monitor inspection procedures and (3) examine records of shipments to locations outside of the generally infested area.

K. Failure to comply with the gypsy moth regulations and/or the provisions of this Compliance Agreement may result in cancellation of this Compliance Agreement and/or assessment of civil penalties.

L. The U. S. Department of Agriculture will furnish the advisory service of the PPQ inspectors without cost. Other than the service of the PPQ inspectors, the U. S. Department of Agriculture will not be responsible for any costs or charges incident to inspections or compliance with the quarantine.

Attachments: 7 CFR 301.45, map, Gypsy Moth Program Manual

CA - Qualified Certified Applicators (QCAs)

Item #1: Name Of QCA and Establishment

Item #2: Location of Establishment

Item #3: Outdoor household articles (OHAs) and mobile homes

Item #4: Gypsy Moth Quarantine, 7 CFR 301.45

Item #5:

A. To ensure that outdoor household articles (OHAs) and mobile homes are free of all viable gypsy moth life stages, PPQ will permit the Qualified Certified Applicator (QCA) identified in Item #1 to inspect, treat (if necessary), and certify OHAs and mobile homes. The QCA will inspect and treat the OHAs and mobile homes according to procedures in the Regulatory Section of the Gypsy Moth Program Manual.

B. The QCA will only inspect, treat, and certify OHAs and mobile homes moves moving out of the generally infested area.

C. The QCA will complete a Compliance Agreement with a PPQ official for each State in which the QCA operates.

D. The QCA will contact the PPQ official, specified in Item #12, if difficulties are encountered. The QCA will follow the instruction of the PPQ official or a State inspector.

E. Regardless of the existing Gypsy Moth population level, the QCA will thoroughly inspect all OHAs and mobile homes following the procedures in the Gypsy Moth Program Manual.

F. At the end of each week, the QCA will mail copies of documents for all inspections performed during the week to the PPQ official specified in Item #12.

G. If the State-issued pesticide license of the QCA expires or becomes invalid for any reason, the QCA must immediately contact the PPQ official specified in Item #12. Each State will require separate QCA certification.

H. As required by the PPQ official specified in Item #12, the QCA will periodically complete refresher training. The PPQ official, identified in Item #12, will supply precise information on the refresher training.

I. During the months of April through August, the QCA will inspect on moving day, if possible. If inspection on the moving day is not possible during this period, the QCA will complete the inspection no more than 5 days prior to movement of the OHAs; in addition, the QCA will safeguard or have the owner safeguard the inspected and certified OHAs from infestation or reinfestation.

J. Failure to comply with the gypsy moth regulations and/or the provisions of this Compliance Agreement may result in cancellation of this Compliance Agreement and/or assessment of civil penalties.

CA - Shippers

Item #1: Name of Establishment

Item #2: Location of Establishment

Item #3: See Regulatory Section Of Gypsy Moth Program Manual

Item #4: Gypsy Moth Quarantine, 7 CFR 301.45

Item #5:

A. The establishment identified above hereby enters into a Compliance Agreement with the U. S. Department of Agriculture under the provisions of the gypsy moth quarantine. The establishment will only move items regulated under the Gypsy Moth Quarantine according to the Gypsy Moth Quarantine.

B. After receiving training, the employees of the establishment will know what documents are necessary for the shipment of the various regulated items; in addition, the employees will be able to initiate inspections for shipments. The employee(s) of the establishment to be trained and certified will be (the following:)

   (Add names of the employees to the CA.)

C. Employees of the establishment will see that the original of the inspection document will be attached to the waybill or other shipping document accompanying the shipment. The carrier will surrender the original inspection document to the consignee at destination. (One copy of the inspection document will be retained by the establishment; another copy of the inspection document will be forwarded to a Plant Protection and Quarantine Office.)

D. During the five months of April through August, the establishment will safeguard Regulated Article(s) after certification from infestation or reinfestation. Safeguards will be (1) storage before shipment and (2) movement directly through regulated areas without stopping (except for refueling or for traffic conditions, such as traffic lights and stop signs). Regulated Articles exposed during transit will be treated as infested articles.

E. PPQ will provide the establishment with (1) appropriate sections of the Gypsy Moth Program Manual, (2) training, and (3) updated information. Among other information, the updated information will include (1) quarantine reports, (2) a listing of generally infested areas, and (3) current maps of the generally infested area when available.

F. If the establishment fails to comply with provisions of this agreement and/or the gypsy moth regulations, this Compliance Agreement will be canceled.

G. The U. S. Department of Agriculture will furnish the service of the PPQ inspectors without cost. Other than the service of the PPQ inspector, the U. S. Department of Agriculture will not be responsible for any costs or charges incident to inspections or compliance with the quarantine.

Appendix

F

Appendix F

Insecticide Labels and MSDSs

Contents

Insecticide Labels and Material Safety Data Sheets (MSDSs) **F-1**
Insecticide Distributors **F-1**

Insecticide Labels and Material Safety Data Sheets (MSDSs)

By reference, the following labels and MSDSs are part of the *Gypsy Moth Program Manual*.

- Labels of insecticides registered for use against the gypsy moth
- MSDSs of insecticides registered for use against the gypsy moth

NOTICE

This appendix supplies additional information about the various insecticides used to control the gypsy moth. Mention of these products and companies is **not** to be considered an endorsement. These products and companies are mentioned merely as a convenience. Other products, **not** mentioned, may also be available.

As a safety precaution, read and follow all label directions.

In addition to label directions, follow all pertinent State and Federal laws.

Labels and MSDSs are available at the following Web sites.

- http://www.greenbook.net
- http://www.cdms.net

Insecticide Distributors

The following list of distributors is accurate as of June, 2008. The list of distributors is not complete and cannot be complete. Companies are often purchased by other companies and names change, so check the Internet for the latest information.

For several reasons, labels and MSDSs of insecticides that are effective against the gypsy moth are not included in the *Gypsy Moth Program Manual*.

1. The registered insecticides often change. The Environmental Protection Agency (EPA) requires that users of pesticides constantly check the current label. Therefore, avoid “storing” labels and MSDSs in an appendix. (However, if a program is in progress, place the current label and MSDS in the appendix.)
2. The companies making the formulation often change.
3. At any given time a sizable number of insecticides are effective against the gypsy moth. The labels and MSDSs would fill a sizable volume by themselves.
4. The current labels and MSDSs are often easily available on the internet. The internet should be accessed to obtain the current label

Table F-1 Insecticide Distributors

Company	Insecticide	Formulations	Larval control	Egg mass control
Bayer CropScience 2 T.W. Alexander Dr. Research Triangle Park, NC 27709 Tel: 866-992-2937 http://www.bayercropscienceus.com	Carbaryl	Sevin® XLR PLUS (EPA Reg. No. 264-333-ZC) **Comment**: Read label to determine the best formulations for each situation	A suspension of microfine Sevin carbaryl insecticide in an aqueous medium for forested areas, and rangeland trees	
		Sevin® 80S (EPA Reg. No. 264-316-ZD) **Comment**: Read label to determine the best formulations for each situation	A dry powder formulation for forested areas, parks, Christmas trees, and rangeland trees	
		Sevin® 80 WSP (EPA Reg. No. 264-526-ZC) **Comment**: Read label to determine the best formulations for each situation	A dry powder formulation in water-soluble paks, for forested areas and rangeland trees	
Certis USA 9145 Guilford Rd., #175 Columbia, MD 21046 Tel: 800-847-5620 Alt tel: 800-255-3924 http://www.certisusa.com	*Bacillus thuringiensis var. kurstaki*	Thuricide® 48LV (EPA Reg. No. 70051-57) **Comment:** Labeled for control of gypsy moth either by aerial application or by ground application	The active ingredient in Thuricide® is *Bacillus thuringiensis var. kurstaki*	
		Thuricide® 76LV (EPA Reg. No. 70051-72)		

Table F-1 Insecticide Distributors (continued)

Company	Insecticide	Formulations	Larval control	Egg mass control
Chemtura Corporation 199 Benson Rd. Middlebury, CT 06749 Tel: 203-573-2000 Alt. tel: 203-723-3670 http://www.uniroyalchemical.com	Diflubenzuron **Comment**: Due to toxicity to aqautic inverte-brate ani-mals, Dimilin® is a restricted-use pesti-cide.	Dimilin® 4L (EPA Reg. No. 400-474) Dimilin® 25W (EPA Reg. No. 400-465)	For use on early instars prior to full leaf expansion (5 to 20%). More effective against gypsy moth than other control materials in this manual. If it is environ-mentally safe to use, Dimi-lin® will be the first choice. The active ingredi-ent is diflubenzuron.	
Dow AgroSciences 9330 Zionsville Rd. Indianapolis, IN 46268 Tel: 317-337-3000 Alt. tel: 800-992-5994 http://www.dowagro.co	Spinosad	Conserve® SC (EPA Reg. No. 62719-291) **Comment:** For effective control of gypsy moth lar-vae, apply when larvae are small and all eggs have hatched)	Spinosad is the active ingredi-ent in Con-serve® SC	
	Tebufenozide	Confirm® 2F (EPA REg. No. 32719-420) **Comment:** For effective control of gypsy moth lar-vae, apply when larvae are small (1st, 2nd, and 3rd instars)l; in gen-eral, foliage devel-opment should be a minimum of 20% for trees and shrubs in nurser-ies and Christ-mas tree farms.	The active ingredient in Confirm® 2F is tebufe-nozide	

Table F-1 Insecticide Distributors (continued)

Company	Insecticide	Formulations	Larval control	Egg mass control
Dow AgroSciences (continued)	Chlorpyrifos	Dursban® PRO (EPA REG. No. 62719-166)	The active ingredient in Dursban® and Lorsban® is chlorpyrifos.	
		Dursban® 50W-WSP (EPA Reg. No. 62719-72) **Comment:** Labeled for use on ornamentals grown in nurseries		
		Lorsban® 4E (EPA Reg. No. 62719-220) **Comment**: Labeled for use on ornamentals grown in nurseries		
	Spinosad	SpinTor® 2SC Naturalyte® (EPA Reg. No. 62719-294) **Comment**: For effective control of gypsy moth larvae, apply when larvae are small or just hatching. For conifers, including Christmas trees and deciduous trees.	The active ingredient is spinosad.	
	Tebufenozide	Mimic® 2LV (EPA Reg. No. 707-270) **Comment**: This insecticide should be applied to the early instar (1st, 2nd, or 3rd) larvae; foliage development should be a minimum of 20%	The active ingredient is tebufenozide.	

Table F-1 Insecticide Distributors (continued)

Company	Insecticide	Formulations	Larval control	Egg mass control
Gowan Company P.O. Box 5569 Yuma, AZ 85366-5569 Tel: 800-888-1844 FAX: 928-343-9255 Alt. tel: 888-478-0798 24-hour assistance: 800-424-9300 http://www.gowanco.com	Phosmet	Imidan® 70-W (EPA Reg. No. 10163-169) **Comment:** Labeled for control of gypsy moth on ornamentals, deciduous trees, and woody evergreens, including conifers growing in Christmas tree nurseries and plantations.	The active ingredient in Imidan® 70-W is phosmet, an organophosphate insecticide	
Olympic Horticultural Products P.O. Box 230 Mainland, PA 19451 Tel: 800-356-4647 http://www.olympichort.com	Cyfluthrin	Decathlon® 20 WP (EPA Reg. No. 432-1402-59807) **Comment**: Labeled for control of gypsy moth larvae on ornamentals and nursery stock.	The active ingredient in Decathlon® 20 WP is cyfluthrin.	
Stoller USA 4001 W. Sam Houston Pkwy N. #100 Houston, TX 77043 Tel: 713-461-1493 Tel: 800-539-5283 FAX: 713-461-4467 http://www.stolleruse.com	→	Golden Pest Spray Oil (EPA Reg. No. 57538-11) **Comment:** For egg masses deposited on trees, ground litter, outdoor furniture, recreation vehicles, firewood, nursery stock, vessels, aircraft, and other forms of transportation	→	Will prevent egg hatch if applied to egg masses.
UAP (United Agri Products) 7251 W. 4th Street Greeley, CO 80634 Tel: 970-356-4400 Alt. tel: 800-301-7976 http://www.uap.com	Carbaryl	Carbaryl 4L (EPA Reg. No. 34704-447) **Comment:** Highly toxic to honeybees and to many aqautic organisms		

Table F-1 Insecticide Distributors (continued)

Company	Insecticide	Formulations	Larval control	Egg mass control
USDA Forest Service 1400 Independence Avenue, SW Washington, DC 20250-0003 Tel: 800-832-1355 http://www.fs.fed.us	Gypsy moth nucleopolyhedrosis virus (NPV), Hamden strain	Gypchek® EPA (Reg. No. 27586-2)	The active ingredient in Gypcheck® is the gypsy moth nucleopolyhedrosis virus (NPV), Hamden strain	
Valent BioSciences Corporation 870 Technology Way Libertyville, IL 60048 Tel: 800-323-9597 http://www.valentbiosciences.com	*Bacillus thuringensis* subsp. *kurtaki* (Btk)	Foray® 48B (EPA Reg. No. 73049-46)	An important biological agent, Btk, is the active ingredient. This biological insecticide, which controls the larval stage o gypsy moth, will kill some other butterfly and moth species.	
		Foray® 48F (EPA Reg. No. 73049-35)		
		Foray® 76B (EPA Reg. No. 73049-49)		
Valent USA Corporation 1170 W. Shaw Ave., # 103 Fresno, CA 93711 Tel: 800-682-5368 http://www.valent.com	Acephate	Orthene® 75 S (EPA Reg. No. 59639-26)	Acephate is the active ingredient. Acephate is labeled for the control of gypsy moth larvae on trees and shrubs. Acephate is toxic to several insects.	
		Orthene® 97 (EPA Reg. No. 59639-91)		

Appendix

G

Appendix G

Methods for Gypsy Moth Eradication

Contents

Introduction **G-1**
Approved Methods and the Final Environmental Impact Statement (FEIS) **G-2**
Biological Insecticides Used in Eradications **G-2**
- Bacillus thuringiensis var. kurstaki (Btk) **G-2**
- Nucleopolyhedrosis Virus (NPV) (Used in Gypchek) **G-4**

Mixing Sequence for Conventional Mixing Equipment, if Carrier 038-A Is Not Used **G-5**
Chemical Insecticides Used in Eradications **G-6**
- Diflubenzuron **G-6**
- Tebufenozide **G-7**

BehavioralTreatments Used in Eradications **G-7**
- Mass Trapping **G-7**
- Mating Disruption **G-8**

Experimental Treatments Considered For Use in Eradications **G-9**
- Fungal Pathogens **G-9**
- Parasitoids **G-9**
- Predators **G-10**
- Nematodes **G-10**
- Egg-Mass Removal **G-10**
- Tree Trunk Bands and Barriers **G-10**
- Insecticides **G-10**
- Silviculture **G-11**

Additional Information on Insecticides with Btk **G-11**
- Foray® 48B- Foray® 48F - Foray® 76B **G-11**
- Thuricide® 48LV Thuricide® 76LV **G-13**
- Dipel® 2X (?) **G-14**

Additional Information on Chemical Insecticides **G-15**
- Diflubenzuron (Dimilin®) **G-15**
- Tebufenozide (Mimic™ 2LV) **G-16**

Introduction

This appendix contains information on the following topics:

- Approved methods for the eradication of gypsy moth

- Behavioral methods used in eradications
- Biological insecticides used in eradications
- Chemical insecticides used in eradications

Experimental treatments considered for use in eradications or control treatments are briefly covered in this appendix, even though they are not presently approved.

Approved Methods and the Final Environmental Impact Statement (FEIS)

The Final Environmental Impact Statement (FEIS), published in November 1995, has designated the treatments approved for gypsy moth eradication. The title of the 1995 FEIS is *Gypsy Moth Management in the United States: A Cooperative Approach*.

The treatments approved in the FEIS for eradications are the following.

- Biological insecticides
  - *Bacillus thuringiensis var. kurstaki (Btk)*
  - Nucleopolyhedrosis virus (NPV) (Used in Gypchek)
- Chemical insecticides
  - Diflubenzuron (Dimilin®)
  - Tebufenozide (note: In Confirm® and Mimic®; developed after the FEIS)
- Behavioral treatments
  - Mass trapping
  - Mating disruption

These approved methods may be used alone or in combination.

Biological Insecticides Used in Eradications

Bacillus thuringiensis var. kurstaki (Btk)

Background—*Bacillus thuringiensis (Bt)* is a rod-shaped bacterium that forms resting spores. Unique to this species is the formation of a protein crystal next to the resting spore during spore formation. *Bt* occurs naturally in soils throughout the world. A strain of *Bt*, called variety *kurstaki* and known as *Btk*, is effective as a control agent for defoliating forest caterpillars.

After gypsy moth larvae ingest the *Btk* spores and protein crystals, the protein crystals dissolve in the gut causing disruption of the gut lining, ultimately resulting in perforation of the gut and leakage of the gut contents. The gypsy moth larvae stop feeding because of the damage to their digestive tracts. Death occurs within a few hours or days.

Use—*Btk* is one of the insecticides of choice for eradicating isolated infestations of the gypsy moth. For eradications, the typical dose rate is 24 BIU per acre (60 BIU/ha) applied two to three times.

There are several formulations of Btk that can be used in eradication projects.

- Foray® 48B
- Foray® 48F
- Foray® 76B
- Thuricide® 48LV

The effectiveness of the *Btk* application will depend on proper timing. The timing of the applications must match the following factors.

- Development of the most susceptible larval instars
- Period of expanding foliage
- Period of favorable weather (dry conditions)

Smaller instars of the larvae are more susceptible than larger instars. Application is best when the majority of the larvae are in the second instar. Application must not be delayed beyond the early third instar. As a rule, application is often done when 30% of the larvae are in the first instar, 50 percent are in the second instar, and 20% are in the third instar.

Btk application is done on expanding leaves. Typically, application is best when the leaves of the red oak are 45% to 60% expanded. An old rule states that for the first application, foliage should have expanded to at least one-quarter to one-half.

Phenology models can be used to help predict insect development, in order for *Btk* application at the most opportune time.

Dry conditions must prevail during and after application.

Effectiveness—Because *Btk* causes gut paralysis and cessation of feeding by gypsy moth larvae, it is well suited as a means of reducing the gypsy moth population. Great reductions in gypsy moth populations occur with the high dose rates used in eradication projects.

On the negative side, *Btk* has varying degrees of toxicity to larval stages of most moths and butterflies. For example, *Btk* treatments reduce both richness and abundance of native lepidopterans, particularly those species with larvae present early in the season when gypsy moth is present.

Nucleopolyhedrosis Virus (NPV) (Used in Gypchek)

Background—The nucleopolyhedrosis virus (NPV) affecting gypsy moth is native to North America. The virus is a member of the Genus *Baculovirus* and is unrelated to arthropod-borne viruses and other viruses that infect man. The virus is specific to gypsy moth and causes a disease that can drastically reduce gypsy moth populations, particularly when high gypsy moth populations and high levels of viral inoculum occur together. In dense gypsy moth populations, the virus may kill up to 90 percent of the larvae. When egg masses are laid on surfaces contaminated with the virus, the virus appears to spread rather easily.

In 1978, Gypchek, a virus-containing biological insecticide, was registered with the U.S. Environmental Protection Agency (U.S. EPA)

Use—Gypchek must be formulated at the mixing and loading site before application. The standard tank mix consists of water (pH 5.5–7.5), an ultraviolet light sunscreen (a lignan Sulfate product), a feeding stimulant (molasses), and a sticking agent (to aid adhesion to leaf surfaces).

In 1995, a commercially produced and ready-to-use carrier called Carrier 038-A was developed. Carrier 038-A is now sold by Omnova Solutions. In addition to giving superior ultraviolet protection and spray deposition patterns, this new carrier is easier to mix and apply. Lower spray volumes can be applied without sacrificing efficacy.

NOTICE

Care must be taken in the mixing and application of Gypchek. Use stickers and UV protectants to enhance the performance of this product. Aerially apply Gypchek in sufficient spray mixture for thorough and uniform coverage.

Application information for Gypchek is as follows.

- Application rate: 5×10^{12} occlusion bodies (OB) in 1.0 gallon of spray mixture per acre (3.7×10^{12} OB per 9.34 L/ha) per application
- Number of Applications: 2 applications, 2 to 4 days apart is recommended during an eradication
- Nozzles: Use boom and nozzle systems designed to result in droplets of 150 to 400 mass media diameter (e.g., flat fan 8006, Beecomist 275 or Micronair AU5000)

- Water pH: approximately 7.0
- (If not in Carrier 038-A) Molasses (MO Mix®)—0.13 gallon (16 fl. oz.)
- (If not in Carrier 038-A) Bond (Loveland Industries) (sticker)—2.5 fl. oz.
- (If not in Carrier 038-A) Lig-nosite AN (Georgia Pacific)—0.5 lb. per gallon

NOTICE

Check pH of water from field source. If pH exceeds 7.5 or is below 5.5, add sufficient acid or base to adjust pH to approximately 7.0. **Never use chlorinated water in the spray formulation.**

Mixing Sequence for Conventional Mixing Equipment, if Carrier 038-A Is Not Used

Step 1: Fill Tank

Fill tank with water and start agitation.

Step 2: Check and Adjust the pH

Before mixing pesticide, check and adjust the pH within the range of pH 6.0 to 7.0. Use commercially available phosphoric acid (85 percent) to lower pH. One ounce of phosphoric acid will adjust 500 gallons of water from a pH of 9.0 to an acceptable level (between 6.0 and 7.0).

Step 3: Add Lig-nosite AN

Add Lig-nosite AN by slowing pouring into water.

Step 4: Add Molasses

Add molasses by slowly pouring into the water and mix thoroughly for about five minutes.

Step 5: Add Sticker

Add sticker and mix thoroughly.

Step 6: Add Gypchek

Slowly add Gypchek to avoid clumps and mix thoroughly for 15 to 20 minutes before loading aircraft.

NOTICE

Read label thoroughly before using. Follow all label cautions and directions.

Effectiveness—Because Gypchek is specific for gypsy moth and does not affect other lepidopteran species or nontarget organisms that might be in the treatment area, Gypchek is a desirable insecticide to use where threatened and endangered species might be found or environmentally sensitive areas.

The availability of Gypchek is limited. The Forest Service and APHIS produce quantities sufficient to treat about 20,000 acres (8,100 hectares) each year.

Chemical Insecticides Used in Eradications

Diflubenzuron

Background—Sold under the name Dimilin®, diflubenzuron belongs to the group of compounds called insect growth regulators (IGRs). When ingested by gypsy moth larvae, diflubenzuron disrupts the formation of a new cuticle (outer skin) during molting. The larvae cannot complete the molting process, their body walls rupture from internal pressure, and the larvae die.

Use—Both aerial and ground applications are used in eradication projects. Dimilin® 4L and Dimilin® 25W are the formulations for use in gypsy moth projects.

Typically, aerial application of diflubenzuron in eradication projects is 0.5 ounces active ingredient in 0.5 to 1.00 gallons spray volume per acre, applied twice, 7 to 10 days apart.

NOTICE

Diflubenzuron is most effective against 1st to 3rd instar larvae.

Effectiveness—Diflubenzuron effectively reduces gypsy moth populations and protects foliage.

WARNING

Diflubenzuron is a “restricted-use” pesticide because of its toxicity to aquatic invertebrate animals. Therefore, only certified pesticide applicators can purchase this insecticide, and use of this insecticide is restricted to certified operators and those under their direct supervision.

Tebufenozide

Background—Sold under the name Confirm® T/0 (and Mimic®), tebufenozide mimics the action of a natural insect hormone inducing molting and metamorphosis. In effect, tebufenozide controls lepidopterous larvae by inducing lethal, premature molts (Confirm® T/0 label, 2001).

Use—Application of tebufenozide must be in a manner that ensures uniform and thorough coverage. Reapplication may be required to protect new flushes of foliage.

Confirm® T/O's label states the following spray adjuvants have been especially formulated to optimize the performance of foliar-applied agricultural chemicals and are recommended for use with Confirm® T/0.

- Latron® B-1956—Effective with dilute sprays applied by ground equipment
- Latron® CS-7—A spreader-binder designed specifically for use in concentrate and low-volume sprays applied by aircraft or ground equipment

Effectiveness—While tebufenozide is, essentially, equally effective against all instars, it is generally good practice to avoid the heavy damage that can be inflicted by later instar larvae (Confirm® T/O label, 2001).

BehavioralTreatments Used in Eradications

Mass Trapping

Background—Mass trapping uses the synthetic sex pheromone, disparlure, to attract male moths to traps placed in a grid pattern across the treatment area. The objective of mass trapping is to capture male gypsy moths before they have a chance to locate and mate with female moths.

NOTICE

Mass trapping is most effective when used to eradicate low-population densities.

As an eradication method, mass trapping can be used alone or with other methods of eradication. For example, the majority of eradications use mass trapping after insecticide application.

Use—Mass trapping involves using an aggressive trapping grid of 3 to 10 traps per acre. If the core area of the infestation is known, increased trapping densities in the core area will be at the level of 10 traps per acre.

Two types of traps are used depending on the expected number of moths caught.

1. The standard “delta” trap is a small-capacity trap about 8 inches (20 cm) long, 4 inches (10 cm) high, and triangular in cross section. To lure the male moth, a tiny plastic strip or wick impregnated with the pheromone is stapled to the inside of the trap. To entrap the male moths, a sticky substance coats the inside surface of the trap.
2. The “milk carton” trap, so called because it resembles a milk carton, is used in areas where large numbers of male moths would quickly overwhelm the sticky surface of the smaller delta trap. Like the delta trap, a small pheromone plastic strip or wick is placed inside the milk-carton trap to lure the male moth. Unlike the delta trap, the milk carton traps contains a 1-inch by 4-inch (2.5 x 10 cm) laminated plastic strip containing the insecticide dichlorvos (DDVP). When used in milk carton traps, DDVP is formulated and registered as Vaportape II (Hercon Environmental Company, Emigsville, PA).

Effectiveness—The higher the population density, the greater the risk that a male will find and mate with a female before being lured into a trap. Therefore, treatment is best used where there are less than 10 egg masses per acre (25 egg masses per hectare).

Mass trapping is a labor-intensive treatment, especially over large areas. Therefore, it is typically used on small infestations less than 100 acres (40.4 hectares). Mass trapping does **not** affect nontarget organisms, except those (primarily flying insects) that accidentally find their way into the traps.

In residential areas with small infestations, mass trapping is an alternative to using insecticides. Mass trapping is an option where there is strong resistance to using insecticides.

Mating Disruption

Background—The objective of mating disruption is to saturate the treatment area with enough pheromone sources to confuse the male moths and thereby prevent them from finding and mating with female moths.

Use—Mating disruption can be accomplished by either ground or aerial application of disparlure.

1. In ground applications, disparlure is distributed on laminated polymeric dispensers or tapes impregnated with the pheromone. From the laminated

polymeric dispensers and tapes, the pheromone is slowly released into the environment. Because the laminated polymeric dispensers and tapes must be manually attached to trees, this method is labor intensive.

2. In aerial applications, disparlure is distributed by dispensers. One type of dispenser is the small (0.1 inch; 2.5 mm) pheromone-impregnated plastic flake. Aircraft drop the flakes, treated with a sticking agent (Gelva 2333), on the forest canopy and understory vegetation.

A drawback of flakes is the required special application equipment. Other formulations **not** requiring special equipment are being examined.

Effectiveness—In eradications, mating disruption is best suited for areas containing less than 10 egg masses per acre (25 egg masses per hectare). Mating disruption may be used alone or with other treatments.

Using disparlure as a mating disruptant is desirable because the pheromone does **not** affect nontarget organisms; however, the plastic dispensers may remain for some time before disintegrating

Experimental Treatments Considered For Use in Eradications

Fungal Pathogens

Entomophaga maimaiga (E. maimaiga) is a virulent pathogen and known to cause extensive epizootics in Japan. Epizootics have occurred in New England and some Middle Atlantic States. The fungus continues to expand its range entering regions more recently colonized by the gypsy moth. During the 1990s, the fungus had a major impact on gypsy moth populations in the United States.

Numerous constraints limit the development of *E. maimaiga* for use as an insecticide: 1) fungi are short-lived in storage; 2) fungi are relatively expensive to produce; and 3) foliar applications of dried fungal preparations are sensitive to heat, humidity, sunlight, and rainfall. Formulating and applying dried fungal preparations also presents unique challenges for achieving adhesion to leaf surfaces and protection from adverse environmental conditions.

Parasitoids

In general, parasitoids, together with other natural enemies (predators and pathogens), help regulate gypsy moth populations by reducing their numbers, but most researchers do **not** believe they play a major role in regulating gypsy moth populations.

Predators

The gypsy moth predator community is complex and includes about 50 species of birds and 20 species of mammals, along with some amphibians, reptiles, fish, insects, and spiders. Only a few of these predators are known to affect gypsy moth population dynamics. The predators are all opportunistic feeders, which means their taste for gypsy moth depends on the scarcity of preferred foods.

In low-density gypsy moth populations, vertebrate predators, especially the white-footed field mouse, are major sources of late-larval and pupal mortality—but not at high gypsy moth densities.

Nematodes

Nematodes that attack insects could be used in residential areas to protect individual trees from defoliation. They have provided control of several ground-dwelling and tree-boring insect species; however, results against the gypsy moth are inconsistent.

Egg-Mass Removal

Because egg-mass removal is labor intensive and time intensive, it is impractical for large areas. In addition, experience has shown that in a forested area, many more egg masses are present than are actually seen and removed.

Tree Trunk Bands and Barriers

Tree trunk bands, commonly made of burlap, and barriers, commonly made of duct tape and Tanglefoot, are only useful in localized urban and suburban situations where small numbers of trees are at risk.

The bands must be checked each day so larvae can be scraped off and killed. During any outbreak, larvae remain in the canopy and feed night and day, thus reducing the effectiveness of the method.

The sticky barriers are extremely effective at preventing larvae from climbing trees; however, they have no effect on larvae already in the canopy. For this reason, the sticky barriers usually only reduce the numbers by 20 to 30 percent.

Insecticides

A number of insecticides other than *Btk*, diflibenzuron, and Gypchek are registered by the EPA for gypsy moth control. These other insecticides were excluded from use in (Federally-funded?) eradications because they affect a wider range of nontarget organisms than *Btk*, diflibenzuron, and Gypchek. However, because of use in regulatory certification, some of the insecticides effective against gypsy moth are included in this manual.

These insecticides may be used on nursery stock but **not** for eradication programs.

Silviculture

Once the gypsy moth becomes established, silvicultural options are reduced.

Additional Information on Insecticides with *Btk*

See the pesticide label for the correct application rates. As a minimum, two applications of *Btk* are required during an eradication; three applications are ideal. When making two applications, wait 14 days between the first and second applications. When making three applications, wait 7 to 10 days between each application.

In most cases, *Btk* is aerially applied. In small infestations (less than five acres), *Btk* may be applied using ground equipment. If you are considering using ground application, contact the Otis Methods Development Center for application guidance.

Foray® 48B- Foray® 48F - Foray® 76B

Like all *Btk* formulations, Foray® insecticides function as a stomach poison. Foray® insecticides are a product of Valent BioSciences. (*See Insecticide Labels and Material Safety Data Sheets (MSDSs)* on page F-1)

Foray® 48B, 48F, and 76B can be used either undiluted or diluted with water for use at 16, 20, 24, 30, or 40 BIU per gallon per acre. When using diluted, use at a gallon of total spray per acre. A sticker is included in the formulation; however, the user may add a sticker such as Plyac® from Loveland Industries, Inc. A sticker is necessary only when heavy rains are expected.

CAUTION

Mix sticker with water before *Btk* is added.

Under most conditions, the best atomization is from rotary atomizers (such as Beecomist, Micronair, and Airbi) set to spray droplets of 50 to 150 microns. Conventional boom and nozzle systems are usable if: 1) the application rate is 0.5 gallons per acre or more; and 2) the boom and nozzle systems are capable of delivering spray droplets of 100 to 250 microns (e.g., TeeJet 8004 nozzles set at 45 forward).

If equipment and local weather conditions permit, use Foray® 48B, 48F, and 76B undiluted whenever possible. When using Foray® 48B or 48F undiluted,

recirculate in a bulk tank or trough the aircraft system for about 10 minutes before starting calibration or spraying. Foray® 48B and 48F have a static viscosity that thins to a stable level on pumping or stirring for a short period.

Foray® 48B and 48F have good weathering characteristics; the residual effectiveness is 7 to 9 days.

Table G-1 Application Rates of Foray® 48B and Foray® 48F

If the number of applications is:	And the BIU per gallon per acre is	Or the BIU per undiluted-neat per acre is:	Then the amount of Foray® 48B needed is:	And the amount of Foray® 48F needed is:	And the amount of water needed is:
2	40	→	107 oz	→	21 oz
2	→	49	107 oz	107 oz	0
2	30	→	80 oz	→	48 oz
2	→	30	80 oz	80 oz	0
2	24	→	64 oz	→	64 oz
2	→	24	64 oz	64 oz	0
3	29	→	53 oz	→	75 oz
3	→	20	53 oz	53 oz	0
3	16	→	43 oz	→	85 oz
3	→	16	43 oz	43 oz	0

Table G-2 Application Rates of Foray® 76B

If the number of applications is:	And the BIU per gallon per acre is:	Or the BIU per undiluted-neat per acre is:	Then the amount of Foray® 76B needed is:	And the amount of water needed is:
2	40	→	68 oz	60 oz
2	→	40	68 oz	0

Table G-2 Application Rates of Foray® 76B

If the number of applications is:	And the BIU per gallon per acre is:	Or the BIU per undiluted-neat per acre is:	Then the amount of Foray® 76B needed is:	And the amount of water needed is:
2	30	→	51 oz	77 oz
2	→	30	51 oz	0
2	24	→	41 oz	87 oz
2	→	24	41 oz	0
3	20	→	34 oz	94 oz
3	→	20	34 oz	0
3	16	→	27 oz	101 oz
3	→	16	27 oz	0

Thuricide® 48LV Thuricide® 76LV

Thuricide® 48LV and Thuricide® 76LV, which contain 48 and 76 BIU/gallon respectively, are registered for use at up to 40 BIU/acre. (*See Insecticide Labels and MSDSs* on page F-1)

Thuricide® 48LV and Thuricide® 76LV can be diluted with water or used undiluted. The rate of application can be 24, 30, or 40 BIU/gallon/acre. A sticker is in the formulation, but additional stickers (such as Bond® or Pylac®) may be added. If a sticker is used, it should be 2 percent of total volume

CAUTION

Mix sticker with water before *Btk* is added.

Thuricide® 48LV and Thuricide® 76LV can be applied with conventional spray systems with flat-fan or hollow-cone nozzles. Undiluted (neat) applications can be applied with flat-fan nozzles, hollow-cone nozzles, or rotary atomizers; however, nearly all undiluted applications are made with rotary atomizers.

Residual effectiveness is 4 to 6 days.

Table G-3 Application Rates of Thuricide® 48LV

If the number of applications is:	And the BIU per gallon per acre is:	Or the BIU per undiluted-neat per acre is:	Then the amount of Thuricide® 48LV needed is:	And the amount of water needed is:
2	40	→	107 oz	21 oz
2	→	40	107 oz	0
2	30	→	80 oz	48 oz
2	→	30	80 oz	0
2	24	→	64 oz	64 oz
2	→	24	64 oz	0

Table G-4 Application Rates of Thuricide® 76LV

If the number of applications is:	And the BIU per gallon per acre is:	Or the BIU per undiluted-neat per acre is:	Then the amount of Thuricide® 76LV needed is:	And the amount of water needed is:
2	40	→	68 oz	41 oz
2	→	40	68 oz	0
2	30	→	51 oz	77 oz
2	→	30	51 oz	0
2	24	→	41 oz	87 oz
2	→	24	41 oz	0

Dipel® 2X (?)

Dipel® 2X is a wettable powder approved for gypsy moth. Application may be by ground or air.

Additional Information on Chemical Insecticides

Diflubenzuron (Dimilin®)

Diflubenzuron belongs to a group of compounds called insect growth regulators (IGR). When ingested by the gypsy moth caterpillars, diflubenzuron disrupts the formation of a new cuticle (outer skin) during molting. The caterpillar cannot complete the molting process, its body wall ruptures, and the insect dies.

Environmental Hazards—Diflubenzuron is extremely toxic to crab, shrimp, and other aquatic invertebrates. Do **not** apply directly to water or wetlands, except under forest canopy when used to control forest pests. Drift or runoff from treated areas may be hazardous to aquatic organisms in neighboring areas. Do **not** contaminate water by cleaning equipment or disposing wastes.

Under the name Dimilin®, two formulations of diflubenzuron are currently available.

Dimilin® 4L is a liquid containing 40.4 percent diflubenzuron by weight (4 pounds of diflubenzuron per gallon of formulation).

Dimilin® 25W is a wettable powder formulation that contains 0.25 pounds of diflubenzuron per pound. Dimilin® 25W is applied at the rate of 0.015 to 0.06 pounds active ingredient per acre.

NOTICE

Dimilin® 4L and Dimilin® 25W are by far the most effective insecticides available for gypsy moth control. Whenever possible, Dimilin® should be used for gypsy moth eradication and regulatory control.

(*See Insecticide Labels and Material Safety Data Sheets (MSDSs)* on page F-1 for suppliers.)

Before mixing pesticide, check and adjust the pH to be in the range of pH 6.0 to 7.0. To lower pH, use commercially available phosphoric acid (85 percent). One ounce of phosphoric acid will adjust 500 gallons of water from a pH of 9.0 to an acceptable level (between 6.0 and 7.0).

Dimilin® does not need a sticker. Dimilin® can be applied up to 2 hours before rainfall. If excessive foaming develops, cut back on agitation.

Mortality will not be noticeable until about 4 to 6 days following treatment. Look for dead larvae on the undersides of leaves. Dimilin® should give excellent control of first, second, third, and fourth instar larvae.

For the greatest effectiveness, treat: 1) when larvae are late first and early second instar; or 2) when general leaf development is one-third to one-half complete. Continue treatment until most of larvae are mid-fourth instar.

Tebufenozide (Mimic™ 2LV)

Tebufenozide mimics the action of the insect hormone that induces molting and metamorphosis.

Mimic™ 2LV, which contains tebufenozide as the active ingredient, is highly active against most lepidopterous larvae. At typical use rates, Mimic™ 2LV has practically no activity against other orders of insects. Mimic™ 2LV controls lepidopterous larvae by inducing a premature lethal molt that begins within hours of ingestion of treated surfaces.

Mimic™ 2LV is approved for both ground application and aerial application. Application may be on forests, (commercial, private, and public forest land), Christmas tree plantations, nurseries for ornamental and shade trees, and shrubs.

Appendix

H

Appendix H

Guidelines for Environmental Documents

Contents

Environmental Documents **H-1**
Environmental Assessment (EA) **H-2**
Suggested Contents for an EA on the Gypsy Moth (After Freeman and Jenson) **H-2**
Additional Information for Completing an EA **H-4**
Finding of No Significant Impact (FONSI) **H-9**
Examples of a Completed FONSI **H-9**

Environmental Documents

Use of the outlines in this appendix will allow Plant Health Directors (PHDs) in Plant Protection and Quarantine (PPQ) to comply quickly and easily with the National Environmental Policy Act of 1969 (NEPA).

This appendix contains an outline and example for two environmental documents commonly used to initiate a gypsy moth eradication program.

1. Environmental Assessment (EA)
2. Finding of No Significant Impact (FONSI)

A third environmental document, a Record of Decision (ROD), is occasionally done to record a decision; however, the ROD is not a required document for PPQ. For certain programs, the United States Forest Service may require a ROD.

If you have any questions concerning this appendix and compliance with NEPA and/or other statutes, contact:

Environmental Services
Policy and Program Development
USDA-APHIS-PPD-EAD Unit 149
4700 River Road
Riverdale, Maryland 20737
301-851-3095

NOTICE

Prior to decision making, submit all EAs to Environmental Services (ES) for review. The review will assure compliance with environmental laws.

Environmental Assessment (EA)

The EA must be tiered (that is, linked) to the detailed Final Environmental Impact Statement (FEIS) on the gypsy moth; in addition, the EA must describe the effects of the eradication program on a site-specific basis. The EA will briefly discuss: 1) the purpose and need for the action; 2) the public's involvement with the issue; 3) the affected environment; 4) alternatives considered; 5) environmental consequences; 6) monitoring; and 7) summary. The EA will also contain agencies and persons consulted, preparers, references, and appendixes. The site-specific EA should be as concise as possible, but still contain all the information necessary for the responsible official to make an informed decision.

After January 2002, USDA–APHIS will increasingly use the publication of L. Freeman and S. Jenson, *How to Write Quality EISs and EAs*, to provide a suggested format for EAs.

NOTICE

Although the format of Freeman and Jenson is **not** mandatory for an EA, USDA–APHIS recommends the use of this format.

Suggested Contents for an EA on the Gypsy Moth (After Freeman and Jenson)

0.0 TITLE PAGE WITH NOTICE (1 page)

1.0 PURPOSE AND NEED FOR ACTION (3 pages)

- 1.1 Proposed Action
- 1.2 Related Documents
- 1.3 Decisions to be Made and Responsible Officials
- 1.4 Issues Used to Formulate the Alternatives
- 1.5 Summary of Authorizing Laws and Policies
  - 1.5.1 State Authorizing Laws
  - 1.5.2 Federal Authorizing Laws

1.5.3 Environmental Laws
1.6 Preview (if necessary)

2.0 ALTERNATIVES (INCLUDE THE PROPOSED ACTION) (2 to 3 pages)

2.1 Overview of Chapter
2.2 Alternatives Considered in Detail

2.2.1 Alternative 1: No Action

2.2.2 Alternative 2: *Btk*

2.2.3 Alternative 3: Dimilin®

2.2.4 Alternative 4: NPV

2.2.5 Alternative 5: Mass Trapping

2.2.6 Alternative 6: Pheromone Flakes

2.2.7 Alternative 7: Sterile Insects
2.3 Alternatives Considered and Alternatives Eliminated
2.4 Comparative Summary of Alternatives
2.5 Preferred Alternative

3.0 AFFECTED ENVIRONMENT (1 to 2 pages)

3.1 Overview of Chapter
3.2 Site Description(s)
3.2 Threatened, Endangered, and Sensitive Species and Environmental Factors
3.4 Humans (Health, Social, and Economic Aspects) and Environmental Factors

4.0 ENVIRONMENTAL CONSEQUENCES (Option 1: by Issue) (4 pages)

4.1 Overview of Chapter
4.2 Human Health and Safety (Issue 1)
4.3 Effects on Nontarget Organisms and Environmental Quality (Issue 2)
4.4 Economic and Political Impacts of Treatment versus Nontreatment (Issue 3)
4.5 Likelihood of the Success of the Project (Issue 4)
4.6 Unavoidable Adverse Effects
4.7 Relationship of Short-Term Use and Long-Term Productivity
4.8 Irreversible and Irretrievable Commitments of Resources
4.9 Other Disclosures (if any)

5.0 LIST OF PREPARERS (1 page)

6.0 LIST OF AGENCIES AND PERSONS CONSULTED (1 page)

7.0 APPENDIXES

7.1 References
7.2 Monitoring
7.3 Treatment Site Maps
7.4 Product Labels and Material Safety Data Sheets
7.5 Letters to/from Federal and/or State Agencies
7.6 Public Involvement and Issues (Scoping)
7.7 Other Appropriate Documents (if any)

Additional Information for Completing an EA

0.1TITLE PAGE WITH NOTICE

The title page should contain the following information.

0.1.1 Environmental Assessment (EA) Title
0.1.2 Treatment Location(s)
0.1.3 Agencies Involved (Lead Agency first)
0.1.4 Date

0.2 NOTICE—Inform readers of the following "Chapters 1 and 2 are an executive summary and that Chapters 3 and 4 contain supporting information." (As appropriate, refer readers to special pages in the EA.)

1.0 PURPOSE AND NEED FOR ACTION

1.1 PROPOSED ACTION—Explain who wants to do what and where and why they want to do it.

1.1.1 NEED FOR ACTION (Why but fully discuss the need for action. Reasons for action should include such economic, social, and ecological factors as the following: the value of the host plants; the loss to any affected industries; the effect on human health if established; the effect on environmental quality if established; and any other site-specific reasons.

The brief discussion should touch on the history of gypsy moth infestation(s) in area or State and then briefly supply basic background information on the gypsy moth: the gypsy moth is not native; the need to protect U.S. forests and tree; and the gypsy moth life cycle and its effects. This basic information is in the Final Environmental Impact Statement (FEIS) on page 1-4 to page 1-9.

Mention that the proposed action for gypsy moth is eradication when an infestation is isolated. The response to a gypsy moth infestation is dictated by the site's location within the United States, *i.e., geography.*

1.2 RELATED DOCUMENTS—Briefly describe the gypsy moth FEIS and risk assessments analyzing possible actions in detail. Explain tiering, the linkage between this EA and the FEIS or any other EA. For example, the following paragraph on the FEIS may be useful.

The gypsy moth FEIS addressed three principal issues:

1. Effect of gypsy moth presence—How does the presence of gypsy moth affect people and the environment?

2. Effect of insecticidal treatments—How do insecticidal treatments affect people and the environment?

3. Effects of noninsecticidal treatments—How do noninsecticidal treatments affect people and the environment?

1.3 DECISIONS TO BE MADE AND RESPONSIBLE OFFICIALS—Explain the decision(s) that must be made and identify any other agencies involved in the NEPA analysis.

1.4 ISSUES USED TO FORMULATE THE ALTERNATIVES—Summarize the scoping (refer to appendix) and explain the relevant issues.

1.5 SUMMARY OF AUTHORIZING LAWS AND POLICIES—List Federal permits, licenses, and entitlements necessary to implement the project.

1.5.1 STATE AUTHORIZING LAWS—List only those laws (and policies, if they exist) that apply to this site-specific situation.

1.5.2 FEDERAL AUTHORIZING LAWS—Through several Federal laws, the USDA has broad discretionary, statutory authority to conduct gypsy moth management activities. List and briefly describe each. No more than one sentence for each. Examples of the laws are as follows.

The *Cooperative Forestry Assistance Act of 1978* provides the authority for the USDA and State cooperation in management of forest insects and diseases, allowing USDA–APHIS and USDA–FS to work together in gypsy moth eradication projects.

The *Plant Protection Act of 2000* provides authority for APHIS to regulate the movement or dissemination of plant pests.

1.5.3 ENVIRONMENTAL LAWS—List and briefly describe only those environmental laws that apply to the site-specific EA.

a. National Environmental Policy Act (NEPA)

b. Federal Insecticide, Fungicide, and Rodenticide Act (FIFRA)

c. National Forest Management Act

d. Endangered Species Act (ESA)

e. National Historic Preservation Act

f. Executive Orders, including Environmental Justice

g. Applicable State laws

h. Other laws as applicable

1.6 PREVIEW—Preview the remaining chapters of the EA (especially if the Council on Environmental Quality (CEQ) has changed). If the CEQ organization has not changed, a preview is not necessary for most EAs.

2.0 ALTERNATIVES

2.1 OVERVIEW OF CHAPTER—Explain that this chapter describes the alternatives (potential actions) and summarizes the environmental consequences of the alternatives.

2.2 ALTERNATIVES CONSIDERED IN DETAIL—Describe the alternatives, including the proposed action and no action. The descriptions should focus on potential actions, outputs, and any related mitigations.

NOTICE

The alternatives of a site-specific EA are the **treatment options** from the gypsy moth FEIS.

2.2.1 ALTERNATIVE 1—No action

2.2.2 ALTERNATIVE 2—*Bacillus thuringiensis* **var.** *kurstaki* (*Btk*)

2.2.3 ALTERNATIVE 3—Diflubenzuron (Dimilin®)

2.2.4 ALTERNATIVE 4—NPV (GypChek®)

2.2.5 ALTERNATIVE 5—Mass trapping

2.2.6 ALTERNATIVE 6—Pheromone flakes

2.2.7 ALTERNATIVE 7—Sterile insects

2.3 ALTERNATIVES CONSIDERED AND ALTERNATIVES ELIMINATED—Explain how the alternatives considered represent a range of reasonable alternatives. As part of the explanation of alternatives, briefly describe the alternatives eliminated from detailed study and explain why they were eliminated.

2.4 COMPARATIVE SUMMARY OF THE ALTERNATIVES—Compare the alternatives by summarizing their environmental consequences. Detail the potential actions and outputs would cause these consequences.

2.5 PREFERRED ALTERNATIVE(S)—Identify the preferred alternative (for gypsy moth, this is USDA–APHIS policy). In the EA, do not give the rationale for the choice of the preferred alternative. Include this rationale in the ROD (Record of Decision) or the Decision Document/FONSI. As an alternative, identify the preferred alternative in section 2.4.

3.0 AFFECTED ENVIRONMENT

3.1 OVERVIEW—Explain that this chapter represents relevant resource components of the existing environment, that is, the baseline environment. As appropriate, review the chapter contents so readers can easily find subsections. Briefly describe the site-specific environment based on the terminology of the gypsy moth FEIS.
3.2 SITE DESCRIPTION(S)—Briefly describe the following: physical location; vegetation (forests, other areas with trees); water present and water quality; microclimate; soils; and nontarget organisms.
3.3 THREATENED, ENDANGERED, AND SENSITIVE SPECIES (FLORA AND FAUNA) AND ENVIRONMENTAL FACTORS—Briefly discuss: 1) any nontarget species affected; and 2) any threatened, endangered, or sensitive species in the area.
3.4 HUMANS (HEALTH, SOCIAL, AND ECONOMIC ASPECTS)AND ENVIRONMENTAL FACTORS—Briefly discuss human health and safety addressing relevant social and economic factors. Describe only those environmental factors applying to the site-specific environment.

4.0 ENVIRONMENTAL CONSEQUENCES

Two options exist for this chapter:

- Option 1: by Issue—With this option, the arrangement of the chapter is by critical issues. One-by-one, each critical issue is discussed with the effect(s) of each alternative treatment.
- Option 2: by Alternative Treatments—With this option, the arrangement of the chapter is by alternative treatments. One by one, each alternative treatment is discussed addressing the effect(s) of each alternative treatment on each critical issue.

Option 1: by Issue

4.1 OVERVIEW OF CHAPTER—Explain that this chapter is arranged by issues. Therefore, on a site-specific basis, this section should be developed directly (point by point) from the “Affected Environment” section and from the treatments for the preferred alternative.
The required human health and environmental consequences information can be found in Chapter 4 of the gypsy moth FEIS and in the Risk Assessments (Appendixes G & F).
For example, incorporation of Table 9-4 or Figure 9-1 from Appendix F would simplify work; they clearly and concisely show human risks.
4.2 HUMAN HEALTH AND SAFETY (ISSUE 1)
4.3 EFFECTS ON NONTARGET ORGANISMS AND ENVIRONMENTAL QUALITY (ISSUE 2)
4.4 ECONOMIC AND POLITICAL IMPACTS OF TREATMENT VERSUS NONTREATMENT (ISSUE 3)

4.5 LIKELIHOOD OF THE SUCCESS OF THE PROJECT (ISSUE 4)
4.6 UNAVOIDABLE ADVERSE EFFECTS
4.7 RELATIONSHIP OF SHORT-TERM USE AND LONG-TERM PRODUCTIVITY
4.8 IRREVERSIBLE AND IRRETRIEVABLE COMMITMENTS OF RESOURCES
4.9 OTHER DISCLOSURES (IF ANY)
Note: The EA from Indiana (*Suggested Contents for an EA on the Gypsy Moth (After Freeman and Jenson)* on page H-2) contains an "Environmental Consequences" chapter arranged using "issues" as the focus.

Option 2: by Alternatives

4.1 OVERVIEW OF THE CHAPTER that this chapter is arranged by alternatives. Therefore, on a site-specific basis, this section should be developed directly from the treatments for the preferred alternative.
The required human health and environmental consequences information can be found in Chapter 4 of the gypsy moth FEIS and in the Risk Assessments (Appendixes G & F).
For example, incorporation of Table 9-4 or Figure 9-1 from Appendix F would simplify work; they clearly and concisely show human risks.
4.2 EFFECTS OF ALTERNATIVE 1—No action (no suppression, no eradication, no slow-the-spread)
4.2 EFFECTS OF ALTERNATIVE 1—No action (no suppression, no eradication, no slow-the-spread)4.4 UNAVOIDABLE ADVERSE EFFECTS
4.5 RELATIONSHIP OF SHORT-TERM USE AND LONG-TERM PRODUCTIVITY
4.6 IRREVERSIBLE AND IRRETRIEVABLE COMMITMENTS OF RESOURCES
4.7 OTHER DISCLOSURES (IF ANY)

5.0 LIST OF PREPARERS

List the preparers of the EA, including the APHIS Plant Health Director, the representative of the State department of agriculture, and other cooperators (1 to 2 pages). Remember the list should show the following.:

- Qualifications of each preparer (professional training, years of experience, areas of expertise, and other distinctions)
- Responsibility for a particular analysis (if applicable)

6.0 LIST OF AGENCIES AND PERSONS CONSULTED

7.0 APPENDIXES

7.1 REFERENCES—Cite pertinent references.
7.2 MONITORING—Briefly discuss the monitoring program (dye cards, and so forth) that will determine the effects of treatments on the environment.
7.3 MAPS—Include maps of the treatment areas.
7.4 PRODUCT LABELS AND MATERIAL SAFETY DATA SHEETS (MSDS)—Include the labels and MDMSs of all insecticides to be used.
7.5 LETTERS TO/FROM FEDERAL AND/OR STATE AGENCIES—Include pertinent letters.
7.6 PUBLIC INVOLVEMENT AND ISSUES (SCOPING)—An excellent resource for conducting public notification and involvement is found in the gypsy moth FEIS, Appendix C-Public Involvement and Issues.

7.6.1 PUBLIC INVOLVEMENT—List public meetings and/or notifications.

7.6.2 ISSUES—Briefly describe issues raised or previously known.
7.7 OTHER APPROPRIATE DOCUMENTS (IF ANY)

Finding of No Significant Impact (FONSI)

A FONSI, prepared by a Federal agency, briefly presents the reasons why an action will not have a significant effect. The FONSI will refer to the EA and the FEIS by linking (tiering). Linking is the term for incorporating by reference more detailed environmental documents, such as the gypsy moth FEIS. On standard-sized paper, the FONSI should be no more than two pages.

To develop a FONSI for a gypsy moth eradication program, use the FONSI outline on the following page. This outline is only a *suggested* outline for a FONSI.

Replace only the text in Bold-Type with site-specific information. The regular-type text should not be replaced without the prior approval of Environmental Analysis and Documentation, as this text satisfies requirements of various Federal statutes and regulations.

A*Completed FONSI (page 1 of 2)* on page H-12 and*Completed FONSI (page 2 of 2)* on page H-13

Examples of a Completed FONSI

On the following pages are examples of a generic FONSI and a completed FONSI.

FINDING OF NO SIGNIFICANT IMPACT
(for)
[EXACT LOCATION BY COUNTY, STATE, OR CITY, SPECIFIC LOCATION(S), AS APPLICABLE]

[YEAR] APHIS Cooperative Gypsy Moth Eradication Program

Site-Specific Environmental Assessment

[BRIEFLY DESCRIBE THE NEED FOR ACTION FROM THE EA]

Under the process described in the National Environmental Policy Act, 1969 (CEPA), this EA was prepared to analyze the effect of the proposed action at the site-specific level. The environmental consequences of this program are analyzed in this EA, which is supported by and tiered to the *Gypsy Moth Management in the United States: a Cooperative Approach, Final Environmental Impact Statement, November 1995* (FEIS). The Animal and Plant Health Inspection Service (APHIS) examined the six alternatives available in the FEIS. APHIS supports Alternative 6 (suppression, eradication, and slow-the spread); however, by a Record of Decision (ROD), APHIS will only participate in eradication efforts. Under Alternative 6, several treatment options are available for gypsy moth eradication efforts. The treatments analyzed that may be used in an eradication efforts are the following: 1) *Bacillus thuringiensis* var. *kurstaki* (*Btk*), a biological insecticide; 2) diflubenzuron, a chemical insecticide; 3) gypsy moth nucleopolyhedrosis virus (NPV) or Gypchek®, a biological insecticide; 4) mass trapping, gypsy moth traps with disparlure to attract male gypsy moths; 5) mating disruption, aerial application of disparlure; and 6) sterile insect release, release of sterile or partially sterile gypsy moth life stages. The potential environmental impacts and mitigation measures of these treatments are describe din the FEIS and EA.

The EA was prepared by the **[STATE AND SPECIFIC AGENCY, IF APPLICABLE]** and USDA–APHIS. The FEIS and EA are available for review at:

USDA–APHIS–PPQ **[LOCAL OFFICE]**
[FULL BUILDING, STREET ADDRESS]
[CITY, STATE, ZIP]
[TELEPHONE NUMBER, IF APPROPRIATE]

[STATE AGENCY, DIVISION]
[FULL BUILDING, STREET ADDRESS]
[CITY, STATE, ZIP]
[TELEPHONE NUMBER, IF APPROPRIATE]

USDA–AHPIS–PPQ
PPQ Information Center, First Floor
4700 River Road
Riverdale, MD 20737

Figure H-1 Generic FONSI Form (page 1 of 2)

Under Alternative 6, a cooperative USDA–APHIS–**[STATE]** eradication project is proposed. This cooperative program selected the treatment options of **[FROM THE EA, i.e., BTK AND MASS TRAPPING]** (*Note: by law, APHIS can only conduct eradication programs). This eradication program will apply **[STATE THE AMOUNT OF INSECTICIDE AND THE NUMBER OF TREATMENTS TO BE USED, NUMBER OF AND TYPE OF TRAPS, ETC., THIS DETAILED PART WOULD COME DIRECTLY FROM THE EA]**, as detailed in the Ea. Implementation of this program, with associated operating procedures and mitigation measures as identified in the EA, will ensure that no significant adverse environmental impacts will occur to the human environment.

Reasons for the Finding of No Significant Impact include the following:

[INSERT INFORMATION FROM EA SUMMARY TABLE IN TEXT FORM HERE. ALSO INCLUDE ANY OTHER REASONS MENTIONED IN THE EA, SUCH AS E&T SPECIES ARE NOT AFFECTED BECAUSE THERE ARE NONE IN TREATMENT AREA(S) OR THE PUBLIC WILL NOT BE IN TREATMENT AREA(S), ETC.]

This EA is consistent with Executive Order No. 12898, "Federal Actions to Address Environmental Justice in Minority Populations and Low-Income Populations." The implementation of this cooperative USDA–APHIS–**[STATE OR DIVISION NAME]** eradication project will not result in disproportionately high and adverse human health or environmental effects on any minority populations and low-income populations. As required by the Executive Order of the President, opportunities for full participation in the NEPA process by such populations have been provided.

_____ _____

[AUTHORIZING FEDERAL OFFICIAL'S NAME] Date
[TITLE]
[UNIT OR DIVISION]

Figure H-2 Generic FONSI Form (page 2 of 2)

FINDING OF NO SIGNIFICANT IMPACT
(for)
Thirteen Listed Counties in Wisconsin

[1997] APHIS Cooperative Gypsy Moth Eradication Program

Site-Specific Environmental Assessment

The gypsy moth, *Lymantria dispar*, is an exotic plant pest, a plant pest not native to Wisconsin. As an exotic plant pest of known destructiveness, gypsy moth ahs the potential to damage and/or destroy by defoliation many plant species in the state of Wisconsin.

There are no isolated infestations of gypsy moth in Wisconsin. If these isolated infestations are not eradicated, gypsy moth could become established in Wisconsin. Once established, Federal and State agencies would impose quarantine restrictions on the movement of plant products and other articles. Also, the gypsy moth would cause adverse environmental effects by its damage.

Under the process described in the National Environmental Policy Act, 1969 (CEPA), this EA was prepared to analyze the effect of the proposed action at the site-specific level. The environmental consequences of this program are analyzed in this EA, which is supported by and tiered to the *Gypsy Moth Management in the United States: a Cooperative Approach, Final Environmental Impact Statement, November 1995* (FEIS). The Animal and Plant Health Inspection Service (APHIS) examined the six alternatives available in the FEIS. APHIS supports Alternative 6 (suppression, eradication, and slow-the spread); however, by a Record of Decision (ROD), APHIS will only participate in eradication efforts. Under Alternative 6, several treatment options are available for gypsy moth eradication efforts. The treatments analyzed that may be used in an eradication efforts are the following: 1) *Bacillus thuringiensis* var. *kurstaki* (*Btk*), a biological insecticide; 2) diflubenzuron, a chemical insecticide; 3) gypsy moth nucleopolyhedrosis virus (NPV) or Gypchek®, a biological insecticide; 4) mass trapping, gypsy moth traps with disparlure to attract male gypsy moths; 5) mating disruption, aerial application of disparlure; and 6) sterile insect release, release of sterile or partially sterile gypsy moth life stages. The potential environmental impacts and mitigation measures of these treatments are describe din the FEIS and EA.

The EA was prepared by the USDA–APHIS, USDA–FS, and Wisconsin Department of Agriculture, Trade and Consumer Protection (DATCP). The FEIS and EA are available for review at:

USDA–APHIS–PPQ
1 Gifford Pinchot Drive
Building 1, Room 204
Madison, WI 53705

Figure H-3 Completed FONSI (page 1 of 2)

Administrator,
Division of Agriculture Resource Management Wisconsin (DATCP)
2811 Agriculture Drive
Madison, WI 53708

USDA–AHPIS–PPQ
PPQ Information Center, First Floor
4700 River Road
Riverdale, MD 20737

Under Alternative 6, a cooperative USDA–APHIS, USDA–FS, and DATCP eradication project is proposed. This cooperative program selected the treatment options of *Btk* at four sites. This eradication program will apply *Btk* (neat) at the rate of 36 billion international units per acrea per application as detailed in the EA. Implementation of this program, with associated operating procedures and mitigation measures as identified in the EA, will ensure that no significant adverse environmental impacts will occur to the human environment.

Reasons for the Finding of No Significant Impact include the following:

1) Human health risk from *Btk* is minor.
2) *Btk* may kill some nontarget lepidopteran species if present and at a susceptible life stage. However, any affected native species are expected to recolonize the treated areas from nearby nontreated areas.
3) No other nontarget organisms would be affected by *Btk*.
4) No endangered, threatened, or sensitive species are in the treatment areas.
5) No other effect to the human environment is known or anticipated.

This EA is consistent with Executive Order No. 12898, "Federal Actions to Address Environmental Justice in Minority Populations and Low-Income Populations." The implementation of this cooperative USDA–APHIS, USDA–FS, and the DATCP gypsy moth eradication project will not result in disproportionately high and adverse human health or environmental effects on any minority populations and low-income population As required by the Executive Order of the President, opportunities for full participation i the NEPA process by such populations have been provided.

_____ _____
Jane Doe Date
State Plant Health Director
USDA–APHIS–PPQ

Figure H-4 Completed FONSI (page 2 of 2)

Appendix

I

Appendix I

Public Meetings/Public Relations

Contents

Compliance with the Final Environmental Impact Statement (FEIS) **I-1**
Public Meetings **I-2**
Public Relations **I-3**

Compliance with the Final Environmental Impact Statement (FEIS)

Instructions on public relations and public meetings are covered in the Final Environmental Impact Statement under the heading “Public Involvement and Issues” (Appendix C of the gypsy moth FEIS). All inquiries will be answered; all complaints on program operations will be investigated and the findings documented.

Public notification procedures applying to gypsy moth control projects are the following:

- Announcing treatment dates to allow anyone who has questions or concerns about adverse insecticide sensitivity to seek medical advice and adequate shelter—individuals will be able to avoid exposure during and after treatment
- Making the Final Environmental Impact Statement (FEIS) and related documents available to inform agencies (U.S. Department of Interior, State environmental regulatory agencies), groups, and individuals who may be interested in or affected by proposed actions
- Providing public notice of scoping activities (e.g., when and where public meetings are scheduled)

Public Meetings

To comply with the National Environmental Policy Act (NEPA), a public scoping meeting is mandatory to provide for public input on issues and concerns and to limit the scope of the analysis to be provided by the EA. The public must be notified of when and where the public meeting will be held. The purpose of the public meeting is to get public involvement in the decision-making process, to identify issues of concern, and to provide information on the various options and the consequences. When chemical applications are being recommended, a Science and Technology or Methods Development (?) representative should be present at each public meeting.

At the public meeting, do the following.

1. Present all the options available (including “No Action”) along with recommended or preferred option.
2. Explain the reasoning and logic for the preferred/recommended option.
3. Discuss the consequences of the proposed action (if any).

In addition, State and Federal agencies cooperating with APHIS and the Forest Service will actively seek public participation and involvement at the local level.

The aims of the public involvement process are the following:

- To discuss the consequences (if any) of the proposed action
- To explain the proposed action and its need
- To guide the environmental assessment process
- To identify individuals sensitive to the insecticides planned for use allowing appropriate mitigating measures to be developed
- To identify local issues and concerns
- To stimulate discussion of alternative measures and their consequences

Because the goal of eradication projects is to eradicate gypsy moth, residents do not have the option of having their property dropped from the proposed treatment block. Mitigating measures will be employed to minimize the concerns of those residents who are unable to opt out of control projects.

The public must be informed of the treatment boundaries and when (if approved) treatment will begin. Maps must show the areas to be treated. With this information, the public will know what to expect.

Public Relations

At the local level, the lead agency in the program should handle publicity on program operations. Usually, a State agency is the lead agency because of: 1) extensive rural and community contacts; and 2) familiarity with the local media. However, there must be cooperation between all agencies to provide uniform, factual information to all segments of the public.

After selection, one individual will act as program spokesperson. The media will receive the name and telephone number of the official spokesperson. By having one spokesperson, information flow is managed (the spokesperson knows what information has been given to the media) and the quality of the information is maintained (the spokesperson is always kept well informed).

Appendix

J

Appendix J

Checking and Calibrating Aircraft

Contents

Introduction **J-1**
Checking and Calibration Procedures **J-1**
Procedure for Hydraulic- or Electric-Driven Systems **J-6**
Procedure for Wind-Driven Pumps **J-8**

Introduction

Calibration is adjusting spray equipment to uniformly apply pesticide at the desired rate per acre. Calibrate each aircraft at the beginning of the program and monitor calibration during the program to assure the discharge rate is correct and remains constant.

With hydraulic- or electric-driven systems, calibrate on the ground. For wind-driven systems, the aircraft must fly and spray for a given amount of time.

Checking and Calibration Procedures

For checking and calibrating, use the following instructions and information in the *Aerial Application Manual*. In the *Aerial Application Manual*, the section on Pilot/Aircraft Inspection is particularly helpful; this information should be read before checking and calibrating the aircraft.

Step 1: Check for Cleanliness and Faulty Equipment

Check the following aircraft parts for cleanliness before calibrating; check mixing equipment at this time:

- In-line and nozzle screens
- Spray system and the aircraft in general
- Spray tank

Step 2: Check for Leaks

Check nozzles for the following:

- Alignment—all tips must be aligned

- Condition—nozzles should be stainless steel and new; do not use brass nozzle tips
- End nozzle feed—if a boom extends more than six inches beyond the end nozzle, the end nozzle must be fed from the end of the boom by a bleed line
- End nozzle location—location of the end nozzle must be no more than three quarters of the wingspan
- Number and size—all nozzles must be present and the same size
- Orientation to the desired direction

Load aircraft with a suitable amount (50 to 75 gallons) of water, run system, and check for leaks. Check for leaks with the mixing equipment (agitators) running. Ensure the system can maintain the desired pressure. If leaks are present, have the contractor make repairs, then recheck the equipment.

Step 3: Determine Acres Covered Per Minute

Use Table J-1 and Table J-2 to determine the swath width of aircraft being used on the project. For aircraft not listed, contact: APHIS Aircraft and Equipment Operations (AEO), 22675 N. Moorefield Road, Edinburg, TX 78541; (956) 580-7270 for an effective swath. Use Table J-3 to determine acres covered per minute.

For all aircraft on APHIS programs, the Department has established an effective swath width and suggested spray tip size for most fixed-wing and rotary aircraft in the agricultural industry.

Aircraft categories have been established to help program planning for desired aircraft based on the insect life cycle, timing of application, support personnel, adequate airport space, required aircraft performance, length and strength of runways, taxiways, ramps, and the elevation and type of terrain to be treated.

A global positioning system (GPS) with moving map technology should be used whenever possible.

GPSs use 24 satellites sending encoded radio signals to determine the precise location of an individual or an object. Linked with a computer software program called a geographic information system (GIS), a computer can decipher the remote-sensed satellite information. Using this technology, pesticide applicators can pinpoint their precise location.

The swath width may be adjusted to match the electronic guidance system flight lines provided the change is **within 10%** of the assigned swath width.

For formation flying, only the lead aircraft needs a guidance system.

Table J-1 Swath Width for Airplane

Airplane and Category[3]	Oil Mixtures[1]	Water Mixtures		Nozzle Tip[2]	
	Feet	Feet	8 oz/A Malathion	20 oz/A Sevin 4-oil	32 oz/A Orthene
Boeing B-17 (A)	500	350	8010	8015	8020
Douglas DC-4/DC-6 (A)	550	400	8010	8015	8020
Fairchild C-119 (A)	500	350	8010	8015	8020
Douglas DC-7B & 7C (A)	650	500	8015	8020	8030
L100-30 Hercules (A) (with Adds Pack Spraying System)	800	650	8008	8010	8015
Curtiss C-46 (B)	500	350	8010	8015	8020
Douglas DC-3/C47 (B)	400	300	8008	8010	8015
Lockheed PV-2 (B)	400	300	8010	8015	8020
Martin 404 (B)	500	350	8010	8015	8020
Douglas B-26 (B)	400	300	8010	8015	8020
Grumman TBM (C)	250	200	8008	8010	8015
Turbine Thrush (C)	150	100	8004	8006	8008
Turbine Air Tractor (C)	150	100	8004	8006	8008
Turbine Ag-Cat (C)	150	100	8004	8006	8008
Thrush (800hp) (C)	150	100		8004	8006
Thrush (1200hp) (C)	150	100	8004	8006	8008
Ag-Cat (800hp) (C)	150	100		8004	8006
Ag-Cat (1200hp) (C)	150	100	8004	8006	8008
Twin Beech/C-45 (C)	150	100	8004	8006	8008
Piper Aztec PA-23 (500hp)(C)	150	100	8004	8006	8008
Cessna (all 188 Models) (D)	100	75	8002	8003	8004
Thrush/Snow/Air Tractor (D)	125	100	8002	8003	8004
Ag-Cat (A Models) (D)	100	75	8002	8003	8004
Ag-Cat (B & C Models) (D)	125	100	8002	8003	8004
Piper Brave (D)	100	75	8002	8003	8004
Piper Pawnee (230-260hp)(D)	100	75	8002	8003	8004
Stearman (450-600 hp) (D)	100	75	8002	8003	8004
Weatherly (D)	100	75	8002	8003	8004

1 Includes malathion and Sev in 4-Oil

2 Stainless steel flat fan

3 Category is shown in parentheses

Table J-2 Swath Width for Helicopters

Helicopters and Category[1]	Malathion, Sevin 4–Oil, and all oil mixtures (ft)	All water mixtures (ft.)
Bell 204/205/212/214 (A)	150	120
Sikorsky S-58-T (A)	150	120
Sikorsky S-55-T (B)	120	100
Alouette III (B)	120	100
Alouette II (C)	100	75
Bell 206 (C)	100	75
Hughes 500 (C)	100	75
Hiller Seloy (C)	100	75
Bell Seloy (C)	100	75
Bell 47 (D)	100	75
Hiller 12E (D)	100	75

1 Category is shown in parentheses

Table J-3 Acres Covered Per Minute

Ground Speed (mph)	Swath Width							
	30	35	40	45	50	75	100	150
40	2.4	2.8	3.2	3.6	4.0	6.1	8.1	16.1
50	3.0	3.5	4.0	4.6	5.0	7.6	10.1	20.2
60	3.6	4.2	4.8	5.4	6.1	9.1	12.1	24.2
70	4.2	5.0	5.7	6.4	7.1	10.6	14.1	28.3
80	4.8	5.7	6.4	7.1	8.1	12.1	16.2	32.3
90	5.4	6.4	7.3	8.2	6.1	13.6	18.2	36.4
100	6.1	7.1	8.1	9.1	10.1	15.2	20.2	40.4
110	66.7	7.8	8.9	10.0	11.1	16.7	22.2	44.4
120	7.3	8.5	9.7	10.9	12.1	18.2	24.2	48.5
130	7.9	9.2	10.5	11.8	13.1	19.7	26.3	52.5
140	8.5	19.9	11.3	12.7	14.1	21.2	28.3	56.6

Formula for Acres Covered per Minute

Determine acres covered per minute by using the following formula.

$$\text{Acres per minute} = \frac{\text{swath width (ft) x speed (mph)}}{495}$$

EXAMPLE Using a swath width of 50 feet and a speed of 100 mph, calculate the following.

Acres per minute = 50 x 100 = 10.1
495

Step 4: Determine the Gallons Per Minute (GPM) Output

Use the following formula for determining gallons per minute.

GPM = Acres per minute x rate per acre in ounces
128 ounces

EXAMPLE The aircraft will cover 10.1 acres per minute. The pesticide label specifies an application rate of 60 ounces per acre. Using the figures above, the formula results in the following.

10.1 acres/minute x 60 ounces/acre = 4.7 gallons per minute
128 ounces

Ensure the pump will deliver the required gallons-per-minute rate.

Step 5: Determine the Number of Nozzles to Install (Flat Fans)

Use the following formula to determine the number of nozzles to install.

GPM = Number of nozzles required (water at 40 psi)
Nozzle flow rate

EXAMPLE To determine the number of nozzles required to deliver 4.7 GPM using a nozzle tip 8002, do the following calculations.

4.7 GPM = 23.5 nozzles required for water at 40 psi (round up to 24)
0.2 nozzles flow rate

Use correction flow factor for materials other than water.

Step 6: Determine Flow Per Nozzle or Atomizer Per Minute

Use the following formula for determining flow per nozzle or atomizer.

Flow/Atomizer/Minute = GPM
number of atomizers

EXAMPLE If the speed is 110 mph and assigned swath is 200 feet, what is the calibrated flow rate through each rotary atomizer if 6-Micronair AU5000 units are used and the applied volume is 64 ounces/acre?

Acres per minute:

Using the table, determine 44.4 acres per minute coverage.

Gallons per minute: $\frac{44.4 \text{ ac/min} \times 64 \text{ oz./ac}}{128}$ = 22.2 gallons per minute

Gallons/Minute/Atomizer: $\frac{22.2 \text{ GPM}}{6 \text{ atomizers}}$ = 3.7 gallons/minute/atomizer

Step 7: Determine Pressure and Flow Settings

The flow rate of a spray tip orifice is proportional to the square root of the operating pressure. To double the flow rate, the pressure must be increased four times. If the examples above were initially used to set up the aircraft, the optimum pressure of 40 PSI may be adjusted slightly to achieve the exact flow rate per minute. In some instances, removing or adding a nozzle may be required. When using rotary atomizers, refer to the manufacturer flowchart to determine the most accurate combination of pressure and variable restrictor unit (VRU) setting.

Step 8: Test Output of Spray System

Procedure for Hydraulic- or Electric-Driven Systems

Load the aircraft with a suitable amount of spray formulation (50 to 75 gallons). Prime the system and set the pressure.

Evacuate air from boom ends by either: 1) slightly opening end caps; 2) installing valves in boom tips; or 3) connecting outboard atomizer inlet to outermost boom port.See Figure J-1 for diagram.

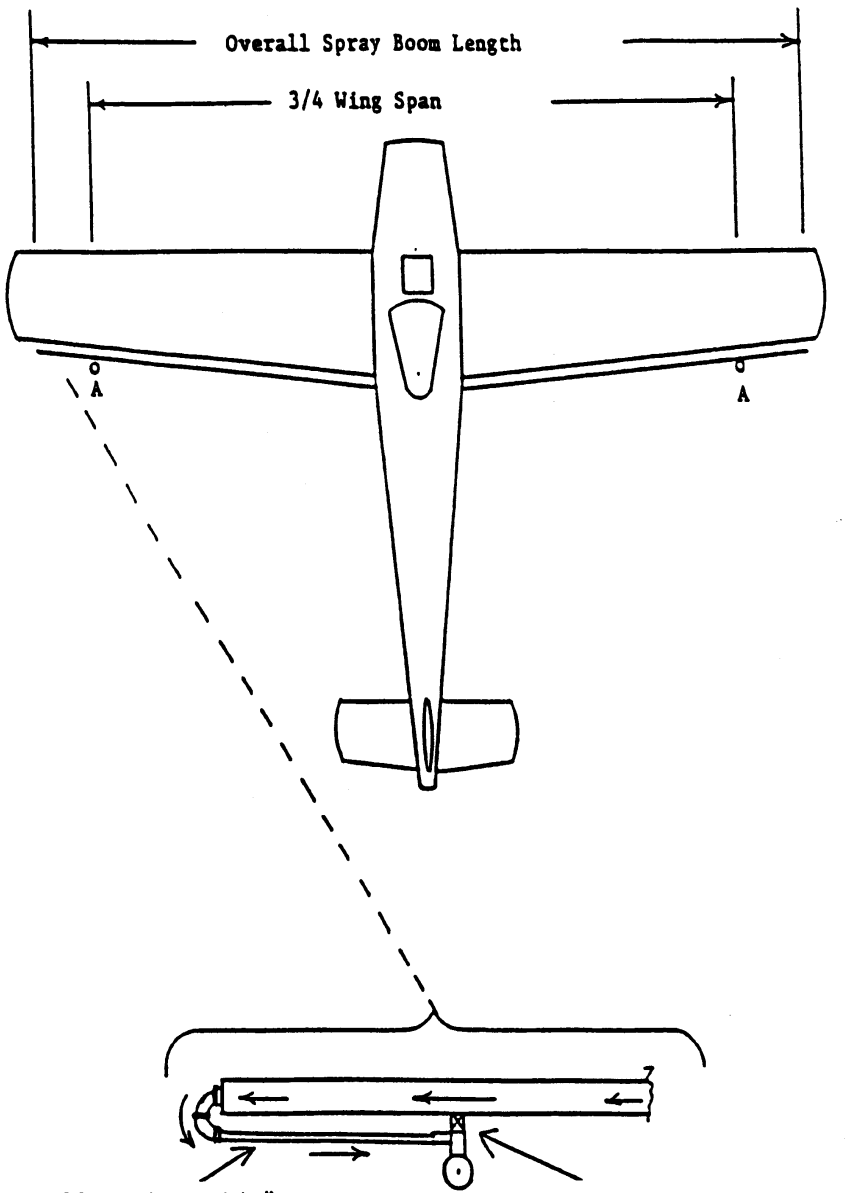

Figure J-1 Diagram of Spray Boom Flow Through Bleed Line to Outer Nozzles

Place a bucket under each atomizer/nozzle and run the spray system for one minute.

Collect material from each nozzle, measure volume output from each atomizer/nozzle, and compare to calculated rate. Check total output. If the amount is low, raise the pressure for small amounts or add nozzles if greater amounts are needed. If the amount is high, lower pressure or remove nozzles. If pressure changes are not suitable, the VRU setting can be adjusted when using Micronair atomizers.

Optimally, the system should deliver the desired amount of spray; however, plus or minus five percent is acceptable.

Procedure for Wind-Driven Pumps

Load the aircraft with a suitable amount of spray formulation (50 to 75 gallons). Fly the aircraft to prime the system. Set the pressure while in flight. This must be accomplished in a designated area or in the treatment area. After the system is primed, position the aircraft on a level surface and mark the location of the aircraft tires on the loading area. Add a measured volume of product to the spray tank and note the level either through a sight window or by measuring the distance from the top or bottom of the tank to the fluid surface of the product.

Fly the aircraft and operate the spray system over the designated area or treatment area for one minute.

Return the aircraft to the same location as marked and measure the amount needed to refill to the original level. Use this amount to calculate the output per minute.

Adjust the spray system, if necessary, to change output. If the amount is low, raise the pressure for small amounts or add atomizers/nozzles if greater amounts are needed. If pressure changes are not suitable, adjust the VRU setting when using Micronair atomizers.

Optimally, the system should deliver exactly the desired amount of spray; however, plus or minus five percent is acceptable.

CAUTION

With some material, the viscosity and flow rate will change with temperature changes, which can result in inaccurate application.

Appendix

K

Appendix K

Nozzles and Pressures

Contents

Introduction **K-1**
Flat Fan (Stainless Steel) **K-2**
Rotary Atomizer Nozzles **K-3**
Spray Tip Wear **K-4**
Screens **K-4**

Introduction

Nozzles, either fixed or rotary atomizer type, are used to atomize the insecticide into the desired droplet size.

Ensure the end nozzle is no more than three-quarters of the wing span. If the boom extends 6 inches or more beyond the last nozzle, feed that nozzle from the end of the boom with a bleed line. See Figure K-1on the following page.

Do not accept nozzles that do not produce the desired droplet sizes. Excessively large droplets waste insecticide, may burn tender foliage, or leave harmful residues. Spray droplets that are too small may drift, contaminate food or feed crops in adjacent areas, and possibly damage the environment.

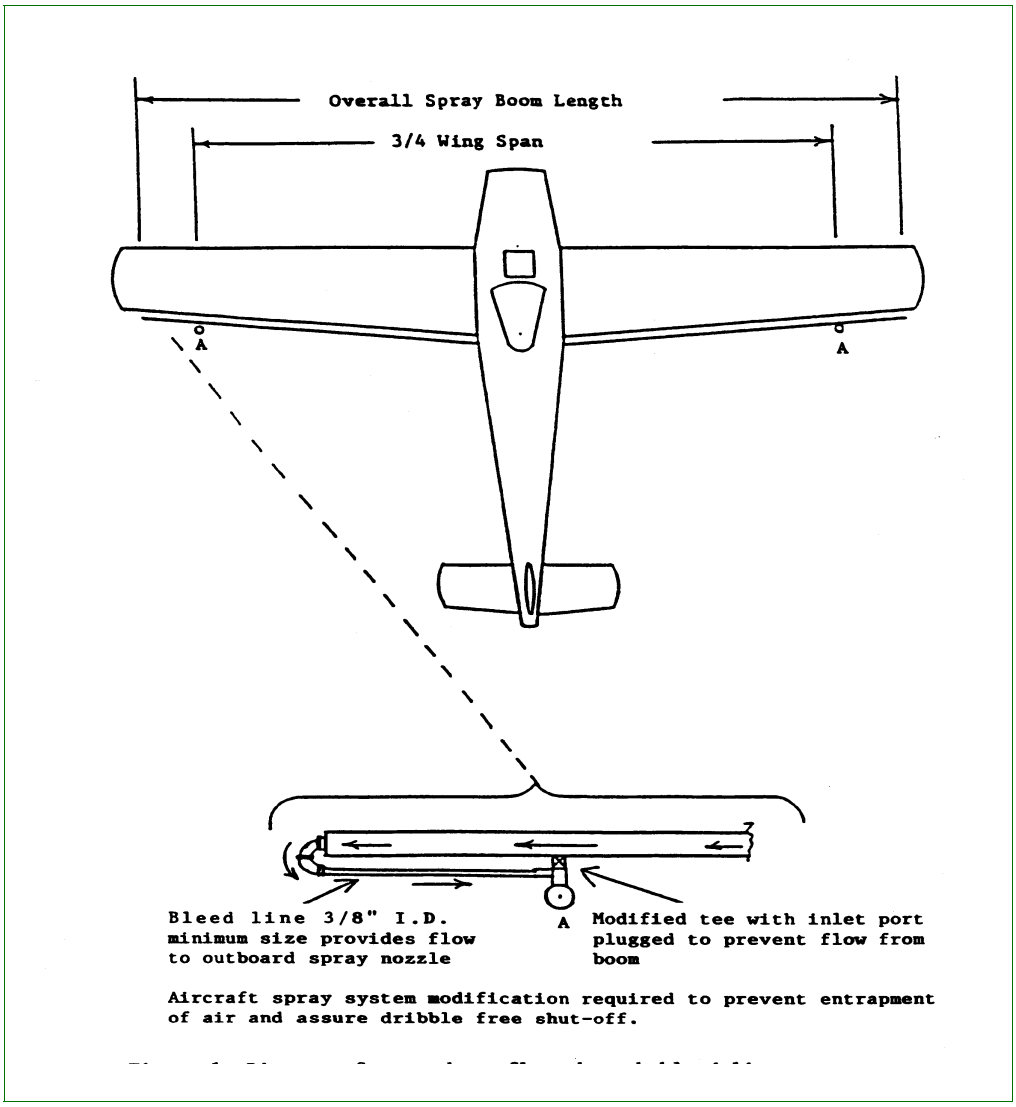

Figure K-1 Diagram of Spray Boom Flow Through Bleed Line to Outermost Nozzles

Flat Fan (Stainless Steel)

When flat fan nozzles are used, the spray contract should specify stainless steel nozzles. Do not allow the use of brass nozzle tips.

Two types of flat fan spray tips are used on gypsy moth programs. The tapered edge flat fan (8004) and the even flat fan (8004E). The tapered edge spray tip produces a pattern with heavier spray in the center and tapering to the edge. The even spray tip produces a uniform spray pattern from edge to edge. Both types are approved for use on APHIS programs.

Flat fan spray tips are categorized by the angle of the spray pattern and the flow rate when spraying water at 40 pounds per square inch. The angle of the spray pattern can vary according to the design of the nozzle, boom pressure, and surface tension of the spray material.

The desired droplet size can be obtained by orienting the spray nozzle from 45 degrees into the wind to 180 degrees trailing.

Examples of spray nozzles follow.

1. Spraying Systems Company—TeeJet 8002 (flat spray tip)
   A. 80 = 80º fan angle
   B. 02 = 0.2 gallon-per-minute flow rate
2. Spraying Systems Company—TeeJet 8003E (even flat spray tip)
   A. 80 = 80º fan angle
   B. 03 = 0.3 gallon-per-minute flow rate
   C. E = even flat spray tip
3. Delavan Corporation—LF-2-80o (flat fan spray tip)
   A. LF = Flat spray tip
   B. 2 = 0.2 gallon-per-minute flow rate
   C. 80 = 80º fan angle
4. Delavan Corporation—LE-3-80º (even flat spray tip)
   A. LE = even flat spray tip
   B. 3 = 0.3 gallon-per-minute flow rate
   C. 80 = 80º fan angle

Rotary Atomizer Nozzles

Rotary atomizers are driven by wind, hydraulic, or electrical power. The spray material is delivered to the center of the unit and dispensed by centrifugal force. Droplet sizes are changed by rotating the device faster to decrease droplet size and slower to increase droplet size. Rotation speed is controlled by adjusting the pitch of the drive propeller or by changing the speed of the electric motor.

The Micronair Mini Atomizer is an example of the rotary atomizer capable of 2,000 to 12,000 revolutions per minute. By adjusting the fan blade, the rotational speed is changed and droplet size can be adjusted from 80 to 1,000 microns.

Spray Tip Wear

As spray tips are used, abrasion and erosion will increase the nozzle flow rate. Replace spray tips when a calibration check indicates a five percent flow rate increase. Most spray tip orifices are available in more than one material. The use of spray tips made of abrasive-resistant material, such as stainless steel, will provide long wear life.

Screens

Filter screens prevent foreign materials from entering and damaging precision parts of the system. These screens also prevent nozzle spray tips from clogging. Unless otherwise specified by the pesticide manufacturer, each spray system should be equipped with a 50-mesh, in-line screen between the pump and boom and nozzle screens as recommended by the nozzle manufacturer.

Check and clean screens often to prevent misapplication of pesticides.

Appendix

L

Appendix L

Procedures for Composting Bark

Contents

Procedure for Composting Bark in a Trench **L-1**
Procedure for Composting Bark in a Pile **L-3**

Procedure for Composting Bark in a Trench

Step 1: Start a Compost Pile

Start a compost pile of at least 200 cubic yards in one end of a trench.

NOTICE

1. The material on the outer side of the compost pile must be free of both eggs that could hatch and larvae.
2. The compost pile must be as far away from host material as possible.

Step 2: Leave Compost Pile Undisturbed

Allow the compost pile to remain undisturbed until the temperature reaches 120 °F (49 °C) for at least 4 continuous days. In situations where 120 °F (49 °C) cannot be maintained for at least 4 continuous days, the compost pile shall remain undisturbed until the temperature reaches 100 ºF (37.8 °C) for at least 6 continuous days.

Step 3: Remove Compost Pile's Outer Layer

Using a front-end loader or a bulldozer, remove the outer layer of the compost pile to a depth of 3 feet.

Step 4: Start a Second Compost Pile

Down the trench, start a second compost pile using the recently removed cover material as a core.

Step 5: Move the Core Material

Move the core material from the first compost pile and place on the second compost pile as a cover at least 3 feet deep. (Leave some composted material to serve as "inoculum" for subsequent piles.)

Step 6: Leave Second Compost Pile Undisturbed

Allow the second compost pile to remain undisturbed until the temperature reaches 120 °F (49 °C) for at least 4 continuous days. In situations where 120 °F (49 °C) cannot be maintained for at least 4 continuous days, the second compost pile shall remain undisturbed until the temperature reaches 100 °F (37.8 °C) for at least 6 continuous days.

Step 7: Remove Second Compost Pile

Remove the second compost pile and use as fully composted material.

Step 8: Repeat Procedure

NOTICE

This procedure will allow continuous operation. After the first compost pile is "turned" to become the second compost pile, a new "first" compost pile can be started.

Procedure for Composting Bark in a Pile

Step 1: Start a Compost Pile

Start a compost pile of at least 200 cubic yards.

NOTICE

1. The material on the outer side of the compost pile must be free of both eggs that could hatch and larvae.
2. The compost pile must be as far away from host material as possible.

Step 2: Leave Compost Pile Undisturbed

Allow the compost pile to remain undisturbed until the temperature reaches 120 °F (49 °C) for at least 4 continuous days. In situations where 120 °F (49 °C) cannot be maintained for at least 4 continuous days, the compost pile shall remain undisturbed until the temperature reaches 100 ºF (37.8 °C) for at least 6 continuous days.

Step 3: Remove Compost Pile's Outer Layer

Using a front-end loader or a bulldozer, remove the outer layer of the compost pile to a depth of 3 feet.

Step 4: Start a Second Compost Pile

Start a second compost pile using the recently removed cover material as a core.

Step 5: Move the Core Material

Move the core material from the first compost pile and place on the second compost pile as a cover at least 3 feet deep. (Leave some composted material to serve as "inoculum" for subsequent piles.)

Step 6: Leave Second Compost Pile Undisturbed

Allow the second compost pile to remain undisturbed until the temperature reaches 120 °F (49 °C) for at least 4 continuous days. In situations where 120 °F (49 °C) cannot be maintained for at least 4 continuous days, the second compost pile shall remain undisturbed until the temperature reaches 100 °F (37.8 °C) for at least 6 continuous days.

Step 7: Remove the Second Compost Pile

Remove the second compost pile and use as fully composted material.

Step 8: Repeat Procedure

NOTICE

This procedure will allow continuous operation. After the first compost pile is “turned” to become the second compost pile, a new “first” compost pile can be started.

Appendix

M

Appendix M

Accurate Statement

Contents

Introduction **M-1**
Required Information for the Accurate Statement **M-1**

Introduction

This appendix contains information on the signed Accurate Statement described in the revised gypsy moth regulations. There are actually two Accurate Statements, one for logs and one for pulpwood or wood chips. The Accurate Statement must be attached to the waybill or other shipping documents accompanying logs, pulpwood, and wood chips inspected under a Compliance Agreement.

Required Information for the Accurate Statement

The signed Accurate Statement must contain the following information:

- Applicable Federal quarantine (7 CFR 301.45)
- Certification statement (see below)
- Date of inspection
- Destination of Regulated Articles
- Location of inspection site
- Mailing address of inspector
- Name of inspector
- Signature of inspector
- Type and quantity of Regulated Article(s)

Accurate Statement for Logs and Poles

Name of Inspector: _____

Mailing Address of Inspector: _____
(including company name)
_____
_____

Location of Inspection Site: _____

Applicable Federal Quarantine: ____7CFR 301.45_____

Regulated Article(s): _____
_____
_____

Destination of Regulated Article(s): _____

Certification Statement:

I certify that all of the exterior surfaces (100 percent inspection) of the following logs were inspected in accordance with the gypsy moth regulations (7 CFR 301.45) and the *Gypsy Moth Program Manual*.

Number of Logs: _____ Species: _____

As a result of the inspection, I certify that:

No life stages of the gypsy moth were found

All life stages found were treated

This inspection occurred no more than five days prior to the date of movement. After the inspection, the logs were safeguarded to prevent infestation or reinfestation by gypsy moth. The above information is true to the best of my knowledge.

Signature of Inspector: _____

Date of Inspection: _____

Figure M-1 Example of Accurate Statement for Logs and Poles

Accurate Statement for Pulpwood (or Wood Chips)

Name of Inspector: _____

Mailing Address of Inspector: _____
(including company name)
_____
_____

Location of Inspection Site: _____

Applicable Federal Quarantine: ____7CFR 301.45_____

Regulated Article(s): _____
_____
_____

Destination of Regulated Article(s): _____

Certification Statement:

I certify the pulpwood (or wood chips) were handled in accordance with the gypsy moth regulations (7 CFR 301.45) and the *Gypsy Moth Program Manual*.

Quantity: _____ Regulated Article: _____

The above information is true to the best of my knowledge.

Signature of Inspector: _____

Date of Inspection: _____

Figure M-2 Example of Accurate Statement for Pulpwood (or Wood Chips)

Appendix

N

Appendix N

Certificate of Origin

Sample of a Certificate of Origin

A Certificate of Origin appears on the following page.

CERTIFICATE OF ORIGIN / CERTIFICAT D'ORIGINE

TO: PLANT PROTECTION ORGANIZATION OF THE UNITED STATES
À : L'ORGANISATION DE LA PROTECTION DES VÉGÉTAUX DES ÉTATS-UNIS

****

The _____ described below are products of Canada, produced in the province of _____ in an area where gypsy moth, *Lymantria dispar*, is not known to occur.

/ Les _____ décrits ci-dessous sont des produits du Canada, cultivés dans la province de _____ dans un endroit où la spongieuse, *Lymantria dispar*, n'est pas présente.

EXPORTER'S NAME / NOM DE L'EXPORTATEUR :
EXPORTER'S ADDRESS / ADRESSE DE L'EXPORTATEUR :
DESCRIPTION OF PRODUCT / DESCRIPTION DU PRODUIT :
QUANTITY-SPECIES-COMMON NAME / QUANTITÉ-ESPÈCE-NOM COMMUN :

_____ Name of exporter (printed) / Nom de l'exportateur (imprimé)

_____ Signature of exporter/ Signature de l'exportateur

_____ Date

_____ Exporter Identification No. / N° d'identification de l'exporteur

Figure N-1 Certificate of Origin

Appendix

O

Appendix O

Checklist for Outdoor Household Articles (OHAs)

Contents

Checklist for OHAs **O-1**
- House Items **O-1**
- Yard and Garden Items **O-2**
- Recreational or Camping Items **O-3**
- Children's Playthings **O-3**
- Building Materials **O-3**
- Other Items **O-4**
- Comments **O-4**

Checklist for OHAs

House Items

- Air conditioner
- Barrels
- Boxes (cardboard and wooden)
- Chimney stack
- Clothespin bag
- Cupola
- Firewood
- House plants (if kept outside in summer)
- Ladder
- Outdoor thermometer
- Refrigerators, washing machines, stoves
- Sheets of plastic
- Shutters
- Storage shed
- Storm doors, storm windows, screen doors
- Tanks for propane and oil

- Trash cans
- TV antenna
- Water hoses
- Weathervane
- Window awnings

Yard and Garden Items

- Animal houses or hutches (dogs, rabbits)
- Bags of stones, peat moss, mulch, and bales of hay
- Barbecue grill
- Beehive
- Birdbath
- Birdfeeder
- Birdhouse
- Bug light
- Cart
- Clothesline pole
- Coldframes
- Driftwood
- Fencing (snow, hurricane)
- Fertilizer spreader
- Fish Pond
- Flagpole
- Garden tiller
- Gypsy moth traps
- Lawn mower
- Mailbox
- Porch and patio furniture
- Sheets of plastic
- Signs and posts
- Snowblower
- Storage shed
- Swimming pool
- Tools (rake, hoe)

- Trellis
- Wheelbarrow
- Yard decorations (statues, planters, milk cans, bells, wishing wells)

Recreational or Camping Items

- Camper
- Backpack
- Basketball backboard
- Boat
- Boat trailer
- Ice chest
- Motorcycle
- Motor home
- Recreational vehicle
- Snowmobile
- Sports equipment
- Tarp
- Tent
- Waders or fishing boots

Children's Playthings

- Bicycle, tricycle
- Playhouse
- Sandbox
- Sled, toboggan
- Swimming pool
- Swing set
- Tire swing
- Wagon

Building Materials

- Brick, cinderblock
- Cement mixing tubs
- Ladder
- Lumber
- Roofing materials (shingles, gutters)

- Sewer pipe
- Sheets of plastic
- Tools (saw, shovel, toolbox)
- Water pipe
- Welding equipment
- Workbench

Other Items

- Cars and trucks (if not driven regularly)
- Car body parts
- Car ramps
- Farm items
- Nursery equipment
- Stored tires (snow, used)

Comments

Appendix

P

Appendix P

Qualified Certified Applicator (QCA) Document

Contents

QCA Document **P-1**
Mobile Home and Associated Items **P-2**
Comments **P-3**

QCA Document

The QCA Document can be located on the following page.

QCA DOCUMENT	
The household move below involves a mobile home and/or OHAs that could have come in contact with some life stage of the gypsy moth. The mobile home and/or OHAs were examined for all life stages; as a result, were ____ found to be free or ____ treated to be free.	
1. **NAME OF PERSON MOVING:**	
2. **MOVING TO (DESTINATION):** Street address: City: State: ZIP:	
3. **MOVING FROM (PRESENT ADDRESS):** Street address: City: State: ZIP:	
4. **DATES:** Date of inspection: Date of move:	5. **TELEPHONE NUMBERS:** Old home: Work: New home: Work:
6. **MOVING FIRM DATA:** Name of firm: Street address: City: State: ZIP: Telephone number (with area code):	
7. **INSPECTION DATA:**	
A. **Notice:** This certificate is valid only if issued not more than five days before the move. See block 4.	B. **Mobile Home Inspection:** Yes No See list on back. **OHAs Inspection:** Yes No See attached list.
Name of QCA (printed) **Certificate No.** **Signature of QCA**	

Figure P-1 QCA Document

Mobile Home and Associated Items

- Air conditioners (remove covers)
- Awnings (open if necessary)
- Blocks on which the mobile home rests

- Chimney flashing and rainguard
- Compressors
- Drainpipes
- Expando unit (open if necessary)
- Fuse box, circuit breaker box, and/or electrical connections
- Hitch, including undersides of the I-beams and junctions
- License plate
- Moldings (probe if necessary)
- Mud flaps
- Patio room
- Propane gas tanks (remove covers)
- Roof and eaves
- Shutters
- Skirting
- Steps
- Taillights
- Underside of the mobile home, including floor boards, frame, and tubing
- Vents
- Wheels, including the inside of the rim and brake drums (if accessible)
- Window sills (top and bottom)

Comments

(Describe any problems or difficulties encountered)

Appendix

Q

Appendix Q

Emergency Action Notification (EAN) PPQ Form 523

According to the Paperwork Reduction Act of 1995, no persons are required to respond to a collection of information unless it displays a valid OMB control number. The valid OMB control number for this information is 0579-0102. The time required to complete this information collection is estimated to average 1 hour per response, including the time for reviewing instructions, searching existing data sources, gathering and maintaining the data needed, and completing and reviewing the collection of information.

FORM APPROVED - OMB NO. 0579-0102

U.S. DEPARTMENT OF AGRICULTURE
ANIMAL AND PLANT HEALTH INSPECTION SERVICE
PLANT PROTECTION AND QUARANTINE

EMERGENCY ACTION NOTIFICATION

SERIAL NO.

1. PPQ LOCATION
2. DATE ISSUED
3. NAME AND QUANTITY OF ARTICLE(S)
4. LOCATION OF ARTICLES
5. DESTINATION OF ARTICLES
6. SHIPPER
7. NAME OF CARRIER
8. SHIPMENT ID NO.(S)
9. OWNER/CONSIGNEE OF ARTICLES

Name:

Address:

PHONE NO. FAX NO.

SS NO. TAX ID NO.

10. PORT OF LADING
11. DATE OF ARRIVAL
12. ID OF PEST(S), NOXIOUS WEEDS, OR ARTICLE(S)
12a. PEST ID NO.
12b. DATE INTERCEPTED
13. COUNTRY OF ORIGIN
14. GROWER NO.
15. FOREIGN CERTIFICATE NO.
15a. PLACE ISSUED
15b. DATE

Under Sections 411, 412, and 414 of the Plant Protection Act (7 USC 7711, 7712, and 7714) and Sections 10404 through 10407 of the Animal Health Protection Act (7 USC 8303 through 8306), you are hereby notified, as owner or agent of the owner of said carrier, premises, and/or articles, to apply remedial measures for the pest(s), noxious weeds, and or article(s) specified in Item 12, in a manner satisfactory to and under the supervision of an Agriculture Officer. Remedial measures shall be in accordance with the action specified in Item 16 and shall be completed within the time specified in Item 17.

AFTER RECEIPT OF THIS NOTIFICATION, ARTICLES AND/OR CARRIERS HEREIN DESIGNATED MUST NOT BE MOVED EXCEPT AS DIRECTED BY AN AGRICULTURE OFFICER. THE LOCAL OFFICER MAY BE CONTACTED AT:

16. ACTION REQUIRED

☐ TREATMENT:

☐ RE-EXPORTATION:

☐ DESTRUCTION:

☐ OTHER:

Should the owner or owner's agent fail to comply with this order within the time specified below, USDA is authorized to recover from the owner or agent cost of any care, handling, application of remedial measures, disposal, or other action incurred in connection with the remedial action, destruction, or removal.

17. AFTER RECEIPT OF THIS NOTIFICATION COMPLETE SPECIFIED ACTION WITHIN (Specify No. Hours or No. Days):

18. SIGNATURE OF OFFICER:

ACKNOWLEDGMENT OF RECEIPT OF EMERGENCY ACTION NOTIFICATION

I hereby acknowledge receipt of the foregoing notification.

SIGNATURE AND TITLE:

DATE AND TIME:

19. REVOCATION OF NOTIFICATION

ACTION TAKEN:

SIGNATURE OF OFFICER:

DATE:

PPQ FORM 523 (JULY 2002) Previous editions are obsolete.

Figure Q-1 Emergency Action Notification (EAN), PPQ Form 523

Gypsy Moth Manual

Glossary

Use this glossary to find the meaning of specialized words, abbreviations, acronyms, and terms used by USDA–APHIS–PPQ–RPM–Manuals Unit. To locate where in the manual a given definition, term or abbreviation is mentioned, refer to the index.

Definitions, Terms, and Abbreviations

accurate statement. a document, prepared by an employee of an establishment operating under a Compliance Agreement, which will allow the establishment to ship logs, pulpwood, and/or wood chips; along with other items, the Accurate Statement includes a certifying statement, information on the type of Regulated Article, the amount and/or number of Regulated Articles, and the signature of the inspecting employee

acephate. an organophosphate insecticide; the active ingredient found in insecticide formulations sold under the trade name Orthene®

AI. the acronym for active ingredient

active ingredient. the chemical in a product which produces the desired effect

artificial disperal. artificial dispersal is dispersal by other than natural means; that is, artificial dispersal occurs through human activities such as the movement of commercial products (nursery stock), vehicles (RVs, campers, cars), and forest products (logs, pulpwood with bark, bark mulch) outdoor household articles

associated equipment. articles used in conjunction with mobile homes and recreational vehicles, such as, but not limited to awnings, tents, outdoor furniture, trailer blocks, and trailer skirts

***Bacillus thuringiensis* (Bt).** the scientific name of the bacterium that is pathogenic to the larval stage of many lepidopterous insects. Bt is the active ingredient in several biological insecticides sold under various trade names

bark. the tough outside covering of the trunk, branches, and roots of trees and certain other plants; the bark includes all tissues outside the vascular cambium (Barnhart, *Dictionary of Science*)

bark products. products containing pieces of bark; these products include bark chips, bark nuggets, bark mulch, and bark compost; bark that has been

composted according to the procedures in Appendix M may move out of the Quarantine Area

Baythroid®2. an insecticide, produced by Bayer Corporation, which contains a pyrethroid as the active ingredient

Bt. the acronym for the bacterium *Bacillus thuringiensis* and for its biological insecticide

CA. the abbreviation for Compliance Agreement

Carbaryl. the active ingredient in a cholinesterase-inhibiting insecticide. Insecticides containing carbaryl are sold under the trade name Sevin® and Clear Crop® carbaryl; atrophine is highly effective as an antidote

certificate. a document, PPQ Form 540, issued by PPQ officers or State personnel to allow the movement of Regulated Articles into or through a non-infested area

chloropyrifos. an organophosphate that is the active ingredient in Dursban* and Lorsban*

Christmas tree. in this manual Christmas trees are trees cut from their roots. If the "Christmas trees" have their roots attached (e.g., balled and burlapped plants), the trees are considered nursery stock, even if intended for display during Christmas

compliance agreement (CA). an official document which specifies the conditions to be followed for growing, handling or moving Regulated Articles; an example would be a written agreement between a shipper (a person or company) engaged in handling, or moving Regulated Articles and Plant Protection and Quarantine and the State; in the CA, the shipper of the Regulated Articles agrees to comply with certain requirements to allow shipment of the Regulated Articles

Confirm® T/O. an insecticide, produced by Dow AgroSciences, which contains tebufenozide as the active ingredient; Confirm® T/O will control gypsy moth on trees and shrubs growing in commercial nurseries, in Christmas tree farms, and in outdoor landscape areas

Conserve® SC. an insecticide, produced by Dow AgroSciences, which contains spinosad as the active ingredient; Conserve* SC is for control of gypsy moth on ornamentals

Cyfluthrin. a synthetic pyrethroid that is the active ingredient in a Baythroid® and Decathlon™

debarking. the removal of bark from round wood, wood carrying its natural rounded surface (debarking does not necessarily make the wood bark free)

Decathlon™ T/O. an insecticide, sold by Olympic Horticultural Products, that contains cyfluthrin as the active ingredient; Decathlon™ T/O will control gypsy moth on ornamentals and nursery stock

defoliation. defoliation is the loss or shedding of leaves; significant defoliation occurs when gypsy moths strip at least 30 percent of the leaves from the trees in a given area

delimiting survey. a delimiting survey is a survey that establishes the boundaries of an area considered to be infested or free from a pest; the typical delimiting survey for a gypsy moth infestation uses pheromone traps, such as the delta trap

Delta trap. a triangular shaped trap made of plastic coated cardboard that uses disparlure to attract male gypsy moths

detection survey. a detection survey is a survey that determines if a pest is present; detection surveys for the gypsy moth focus on finding infestations, particularly isolated infestations; the typical detection survey uses pheromone traps (when suspected infestations or obvious infestations are detected, further surveying using a delimiting survey usually follows)

Dimilin®. an insecticide, produced by Uniroyal Chemical, which contains diflubenzuron as the active ingredient; Dimilin® T/O will control gypsy moth on trees and shrubs growing in public and private forests, in Christmas tree and conifer nurseries, in recreational areas, such as campgrounds, golf courses, parks, and parkways

Diflubenzuron. the active ingredient of insecticide formulations sold under the trade name Dimilin®; acts as a growth regulator by interfering with chitin synthesis and prevents larvae from successfully completing the molting phases

disparlure. a commercially synthesized analogue of the sex pheromone emitted by the female gypsy moth to attract the male

Dursban. * an insecticide, sold Dow AgroSciences and United Horticultural Supply, that contains chlorpyrifos as the active ingredient; Dursban* will control gypsy moth larvae

EA. the abbreviation for environmental assessment (*See Guidelines for Environmental Documents* on page H-1)

egg-mass survey. a survey to find egg masses that will establish: 1) whether reproduction of gypsy moth has occurred (if an infestation is present); and/or 2) the population density by determining the amount of reproduction

eradication project. action taken to eliminate an infestation (with gypsy moth, usually an isolated infestation)

established. an introduced pest, present in an area, reproducing, and expected to continue to reproduce

FEIS. the abbreviation for Final Environmental Impact Statement

FONSI. the abbreviation for Finding of No Significant Impact (*See Guidelines for Environmental Documents* on page H-1)

Forest Service. the Forest Service, a USDA agency, works in combination with PPQ to eradicate certain pests

Forey®. a biological insecticide, produced by Valent BioSciences, that contains *Bacillus thuringiensis* var. *kurstaki*; Forey® will control gypsy moth, but consult the labels for restrictions on use

free from. of a consignment, field, or place of production: without pests or a specific pest (in this case, gypsy moth)

FS. the abbreviation for the Forest Service

quarantine area. the area where gypsy moth is established, that is, maintaining a reproducing population

golden pest spray oil. this emulsified soybean oil is used to treat gypsy moth egg masses to prevent their hatch

Gypchek. USDA laboratory prepared and refined gypsy moth nucleopolyhedrosis virus; used as a biological insecticide

gypsy moth. L*ymantria dispar,* Linnaeus, (Lepidoptera: Lymantriidae) a moth native to the Old World, having hairy caterpillars that feed on foliage and are very destructive to hardwood trees

Imidan® 70-W. an organopohphate insecticide, a product of the Gowan Company, that contains phosmet as the active ingredient; Imidan® 70-W will control gypsy moth on ornamental plants growing in nurseries

infestation. a reproducing population in a given area

IPM. the abbreviation for Integrated Pest Management

isolated infestation. a reproducing population of gypsy moth, typically occupying no more than a few hundred acres, located outside the Quarantine Area; isolated infestations are determined as a result of a positive detection survey followed by a positive delimiting survey or egg mass survey

limited permit. an official authorization (usually PPQ Form 530, issued by PPQ officers and State personnel) for the movement of Regulated Articles to a specified destination for treatment or processing

Lorsban*-4E. an insecticide, produced by Dow AgroSciences, that contains chlorpyrifos as the active ingredient; Lorsban*-4E will control gypsy moth in Christmas tree nurseries and plantations

***Lymantria dispar* (L.).** the scientific name for gypsy moth

MB. the abbreviation used for methyl bromide

methyl bromide. a fumigation chemical used to treat gypsy moth egg-mass

Mimic™. an insecticide, produced by Dow AgroSciences, that contains tebufenozide as the active ingredient; Mimic™ will control gypsy moth on forest trees, Christmas trees, and shrubs

mobile home. any vehicle other than a recreational vehicle, designed to serve, when parked, as a dwelling or place of business

monitoring. assessing compliance with the gypsy moth regulation by reviewing activities required by Compliance Agreements

NAPIS. the acronym for the National Agricultural Pest Identification System, which serves as a repository for pest survey information, including the information on gypsy moth

natural dispersal. dispersal that occurs through natural means; for gypsy moth, natural dispersal involves the short-distance movement of adult moths and the longer distance spread by windblown first-instar larvae

NEPA. the acronym used for the National Environmental Policy Act of 1976 (*See Guidelines for Environmental Documents* on page H-1)

noninfested area. an area where a pest (in this case, the gypsy moth) is *not* established

NPV. the abbreviation used for nucleopolyhedrosis virus of gypsy moth

OHA. the abbreviation used for an Outdoor Household Article

outdoor household article. an item associated with a household that has been kept outside the home; some examples of OHAs are outdoor furniture, barbecue grills, dog houses, boats, hauling trailers, garden tools, tents, awnings, and firewood

ovicide. an ovicide is a pesticide that kill eggs

Phosmet. an organophosphate that is the active ingredient in Imidan®

posttreatment survey. a delimiting survey conducted after a treatment to determine the effectiveness of the treatment; in an eradication program, the posttreatment survey(s) will help determine if the eradication was successful

QCA. the abbreviation for Qualified Certified Applicator

QCA document. the document used by a pest control operator who is certified by the State or the USDA for the interstate movement of Outdoor Household Articles (OHAs)

qualified certified applicator. an individual who is: 1) a certified pesticide applicator under FIFRA (the Federal Insecticide, Fungicide, and Rodenticide Act) who can use the restricted pesticides recommended in this manual; and 2) a successful completor of a workshop approved by PPQ on the identification and treatment of gypsy moth life stages

quarantine area. an area within which a quarantine pest is present and is being officially controlled [FAO, 1990; revised FAO, 1995].

- **quarantine area. IPPC definition:** an area into which, within which, and/or from which plants, plant products, and other Regulated Articles are subjected to phytosanitary measures to prevent the introduction and/or spread of quarantine pests (in this case, gypsy moth)
- **GM Program Manual Definition:** an infested area from which plants, plant products, and other regulated articles are subjected to phytosanitary measures to prevent the introduction and/or spread of the gypsy moth

record of decision. an environmental document occasionally used to record a decision (*See Guidelines for Environmental Documents* on page H-1)

recreational vehicles. highway vehicles, including pickup truck campers, one-piece motor homes, and travel trailers, designed to serve as a temporary place of dwelling

regulated articles. include the following:

- Nursery stock—nursery stocks includes trees with roots and shrubs with roots and persistent woody stems, if grown outdoors (nursery stock that is grown in an enclosed greenhouse throughout the year is not regulated)
- Forest products—forest products include logs, pulpwood, bark, and bark products
- OHAs—OHAs are Outdoor Household Articles; recreational vehicles (RVs) are treated as OHAs
- Mobile homes and associated equipment
- Cut Christmas trees
- Any other products, articles, or means of conveyance if they present a high risk of artificial spread

regulatory trapping. trapping conducted around establishments where Regulated Articles are sold, handled, processed, or moved to determine the need for regulatory action

ROD. the abbreviation for the Record of Decision

RV. the abbreviation for recreational vehicle

Scoping activities or sessions. as defined under the National Environmental Policy Act—an early and open process for determining the scope of issues to be addressed and for identifying the significant issues related to a proposed action; this may include public meetings whereby significant issues are identified, or may simply be letters of inquiry to interested agencies, groups, or individuals

Sevin®. an insecticide that contains carbaryl as the active ingredient

Spinosad. the active ingredient (including spinosyn A and spinosyn D) in Conserve* SC and SpinTor* 2SC

SpinTor* 2SC. an insecticide, a product of Dow AgroSciences, that contains spinosad as the active ingredient. SpinTor* 2SC will control gypsy moth on conifers (including Christmas trees) and on deciduous trees in tree farms and plantations

Tebufenozide. an insect growth regulator (IGR) that acts as an insecticide; Tebufenozide is in Confirm® T/O and Mimic™ 2LV

Thuricide®. a biological insecticide, produced by Certis USA, that contains *Bacillus thuringiensis* var. *kurstaki*; Thuricide® will control gypsy moth on ornamentals and shade trees

transition area. an area between the Quarantine Area and the uninfested area; because of natural dispersal, the area is in transition from uninfested to generally infested

- Populations are variable and discontinuous; mostly male moths will be detected, occasionally other life stages
- Population outbreaks do not occur and defoliation is uncommon

transition area survey. a survey designed and conducted to monitor the Transition Area and provide data to support regulatory decisions

trap array. the pattern of trap placement within an area

trap density. the number of traps per unit of area

trapping frequency. how often an area is trapped

Gypsy Moth Manual

Index

A

accurate statement 9-6
- introduction to M-1
- required information for M-1

aircraft, checking and calibrating J-1
APHIS Cholinesterase Testing Program 16-1
Asian gypsy moth
- background on 1-2, 25-1
- behavioral treatments for G-7
  - delta trap G-8
  - mating disruption G-8
  - milk carton trap G-8
- characteristics of 25-1
- damage caused by 1-2
- dispersal of 1-3
- eradication methods G-1
  - behavioral treatments G-2, G-7
  - biological insecticides G-2
  - chemical insecticides G-6
  - experimental treatments G-9
- policy for 25-2
- potential damage from 1-3
- public relations about 6-3
- specimens
  - introduction to 5-1
  - mailing instructions for 5-1

B

bark
- pile composting procedures L-3
- trench composting procedure L-1

Bayer CropScience F-3
biological insecticides
- Bacillus thuringiensis var. kurstaki (Btk) G-2
- Foray 48B G-3
- Foray 48F G-3
- Foray 76B G-3
- Thuricide 48LV G-3

C

Certificate (PPQ Form 540) 6-3
certificate of origin
- sample of N-1

Certis USA F-3
chemical insecticides
- Confirm T/O G-7
- Diflubenzuron G-6, G-15
- Dimilin 25W G-6
- Dimilin 4L G-6
- Mimic G-7
- Tebufenozide G-7, G-16

Chemtura Corporation F-4
Christmas tree plantations
- compliance agreement for E-7
- regulatory activities for 23-2

Christmas trees
- Canadian 11-1

cleanup materials 16-2
compliance agreement
- Christmas tree plantations E-7
- nurseries E-6
- nursery stock 10-1
- operation under 9-2
- qualified certified applicators (QCAs) E-7
- receiving mills 9-4, E-4
- shipment under 9-4
- shippers E-9

Confirm T/O G-7
control measures
- introduction to 15-1

D

delimiting survey
- conducting 3-2
- introduction to 3-1
- materials needed for 3-2
- records and maps 3-8

delta trap assembly G-8
- materials for C-1
- procedures for C-2

detection survey
- conducting 2-7
- introduction to 2-1
- materials needed for 2-2
- planning for 2-2
- records and maps 2-14

Diflubenzuron G-6
Dimilin 25W G-6
Dimilin 4L G-6
dispersal
- artificial 21-1
- natural 21-1

documents
- APHIS Factsheet-Asian Gypsy Moth 25-2
- Asian Gypsy Moth (AGM) Vessel Alert List 25-2
- Asian Gypsy Moth Emergency Program Manual 25-2
- Comparison of Pesticides for Gypsy Moth Control A-1
- Gypsy Moth Nucleopolyhedrosis Virus A-1
- Gypsy Moth--Forest Insect and Disease Leaflet 162 A-1
- Gypsy Moth--Pest Alert NA-FB/P-21 A-1
- Ship Inspection Guidelines--Asian Gypsy Moth 25-2

Dow AgroSciences F-4

E

egg-mass
- removal
  - experimental treatments G-10
- survey
  - initiating factors 22-1
  - instructions for 4-2, 4-3
  - methods 22-2
  - purpose of 4-1
  - regulatory purposes of 4-5
  - results of 24-1
  - targeted visual surveys of 4-3

Emergency Action Notification (PPQ Form 523) Q-1

environmental assessment (EA) 15-3
- introduction to H-2

experimental treatments
- egg-mass removal G-10
- fungal pathogens G-9
- insecticides G-10
- nematodes G-10
- parasitoids G-9
- predators G-10
- tree trunk bands and barriers G-10

F

Final Environmental Impact Statement (FEIS) 15-3
- compliance with I-1

finding of no significant impact (FONSI) H-9

flat fan K-2

Foray 48B G-3

Foray 48F G-3

Foray 76B G-3

fungal pathogens
- experimental treatments G-9

G

Gowan Company F-6

Gyphek
- definition of G-4

Gypsy Moth State Survey Committee 15-3

H

hazardous materials
- 1980 Emergency Response Guidebook 16-1

hazardous site 8-1
- classification 9-5
- documentation of 8-4
- inspection of 8-2
- movement from 6-2
- movement of regulated articles 8-1
- nursery stock 10-1
- treatment of 8-3
  - timing for 8-2

I

insecticide
- experimental treatments G-9

insecticide distributors F-1
- Bayer CropScience F-3
- Certis USA F-3
- Chemtura Corporation F-4
- Dow AgroSciences F-4
- Gowan Company F-6
- Olympic Horticultural Products F-6
- Stroller USA F-6
- United Agri Products F-6
- USDA Forest Service F-7
- Valent BioSciences Corporation F-7
- Valent USA Corporation F-7

insecticide eradication
- introduction to 18-1
- materials for 18-1
- procedure for 18-2

insecticide labels F-1

inspection procedures
- logs 9-2
  - laid out method 9-3
  - timing 9-3
- pulpwood and bark 9-4
  - fumigation 9-4
  - movement to receiving mills 9-4
  - treatments 9-5

L

larval instars
- avoided hosts 2-10
- nonpreferred hosts 2-9
- preferred hosts 2-9

larval trapping survey
- procedures for 4-7
- purpose of 4-6

Limited Permit (PPQ Form 530) 6-3

list of figures LOF-1

list of tables LOT-1

logging operations
- regulatory activities for 23-2, 24-2

logs, pulpwood, and bark
- documentation for 9-6

M

manual
- conventions of 1-7
- how to use 1-6
- purpose of 1-1
- related documents of 1-5
- reporting problems for 1-7
- scope of 1-4
- users of 1-5

maps
- U.S. quarantine areas B-1

mass trapping eradication
- introduction to 19-1
- materials for 19-1
- procedure for 19-2

Material Safety Data Sheets (MSDSs) F-1

milk carton trap G-8
- assembly
  - materials for C-5
  - procedure for C-5

mills/log yards
- regulatory activities for 23-2

Mimic G-7

mobile home
- contacts
  - haulers 14-2
  - media 14-2
  - mobile home park operators 14-2

pesticide applicators 14-2
State Department of Transportation 14-2
insecticide spraying 14-6
inspection documents 14-6
inspection procedure 14-4
inspection safety 14-3
PPQ Form 530 (Limited Permit) 14-6
PPQ Form 540 (Certificate) 14-6
preinspection procedure 14-2
QCA document 14-6
regulation of 14-1
removing egg masses 14-5

N

National Environmental Policy Act of 1969 (NEPA) H-1
nematodes
experimental treatments G-9
noninfested area
definition of 21-1
nozzles
introduction to K-1
rotary atomizer K-3
nurseries
compliance agreement for E-6
regulatory activities for 23-2
nursery stock
fumigation for large lots 10-3
introduction to 10-1
large lots procedures 10-2
small lots procedures 10-2
spray treatments for large lots 10-3

O

Olympic Horticultural Products F-6
outdoor household articles (OHAs)
building materials O-3
checklist for O-1
children's playthings O-3
house items O-1
inspection procedure 13-1
monitoring the shipment of 13-1
other items O-4
preinspection procedure 13-3
recreational and camping items O-3
self-inspection of 13-2
under compliance agreement 13-2
yard and garden items O-2

P

parasitoids
experiment treatments G-9
pesticide
certification 7-1
egg-mass treatments 7-2
fumigation 7-2
physical removal 7-2
larvae treatments 7-3
aerial 7-3
ground 7-3
safety 7-1
Pesticide First Aid Handbook 16-1
Pesticide Label and Labeling Safety Instructions/ Precautions 16-1
PPQ forms
PPQ Form 343 (Trapping Record) 2-2, 2-12, 3-2
PPQ Form 353 (Trap Site Map) 2-14
PPQ Form 391 (Specimens for Determination) 2-2, 5-4
completion of 5-4
distribution of 5-5
PPQ Form 519 (Compliance Agreement (CA)) E-1
PPQ Form 519 (Compliance Agreement) E-1
PPQ Form 523 (Emergency Action Notification) Q-1
PPQ Form 527 (Sticky Back Certificate) 6-3
PPQ Form 530 (Limited Permit) 6-3
PPQ Form 540 (Certificate) 6-3
PPQ Guidelines for Managing and Monitoring Pesticide Spills 16-1
predators
experimental treatments G-10
pressures
introduction to K-1
procedures
inspections high-risk areas 23-1
program
cooperation in 1-3
public meetings I-2
public relations I-3
pulpwood/bark
inspection procedures 9-4
pumps
procedure for wind-driven J-8

Q

qualified certified applicators (QCAs) 12-1
authorization of under compliance agreements 12-2
compliance agreement for E-8
document P-1
mobile home and associated items P-2
qualifications of 12-1
substandard performance of 12-2
training for 12-1
quarantine area
definition of 21-1
quarantine areas in Canada B-1
quarantine areas in the United States B-1

R

receiving mills
compliance agreement for E-4
Recognition and Management of Pesticide Poisoning 16-1
regulated articles 6-1
definition of 21-1
numbers shipped 6-2
regulatory activities
Christmas tree plantations 23-2
documentation for 6-3
logging operations 23-2, 24-2
mills/log yards 23-2
nurseries 23-2
personnel 6-2
purpose of 6-1
State and national parks 24-3

S

safety materials 16-2
safety measures 1-8
    vehicles 1-9
    when trapping 1-8
safety precautions and references 16-1
screens K-4
shippers
    compliance agreement for E-9
silviculture
    experimental treatments G-11
Specimens for Determination Form (PPQ Form 391) 2-2
spray tip wear K-4
Standard Pesticide Users Guide 16-1
State and national parks
    regulatory activities for 24-3
Sticky Back Certificate (PPQ Form 527) 6-3
Stroller USA F-6
survey results
    male moths alone 24-1
survey tools
    introduction to 4-1

T

Tebufenozide G-7
Thuricide 48LV G-3
transfer areas
    criteria 24-1
transition area
    definition of 21-2
    introduction to 20-1
    map 24-2
    regulatory activities for 23-1
    significance of 20-2
    survey activities 22-1
trap locations
    plotting of 2-7
Trap Site Map (PPQ Form 353) 2-14
trap surveys
    initiating factors 22-1
    moth identification 22-2
    servicing 22-2
    trap type 22-2
    trapping density 22-1
    trapping period 22-2
Trapping Record (PPQ Form 343) 2-2, 2-12, 3-2
tree trunk bands and barriers
    experimental treatments G-10

U

United Agri Products F-6
USDA Forest Service F-7

V

Valent BrioSciences Corporation F-7
Valent USA Corporation F-7