Department of Agriculture,
Trade & Consumer Protection

County Drainage Board Handbook

Revised February 2007

COUNTY DRAINAGE BOARD

HANDBOOK

February 2007

Prepared for: County Drainage Board Members

Prepared by: Department of Agriculture, Trade and Consumer Protection

Assistance From: University of Wisconsin Cooperative Extension Service and
The Wisconsin Association of Drainage Districts

No liability is assumed with respect to this publication. Court rulings or amendments to law could affect a particular procedure, issue, or interpretation. The Department of Agriculture, Trade, and Consumer Protection assumes no responsibility for errors or omissions nor any liability for damages resulting from the use of information contained herein. Please contact your attorney for legal advice.

ARMPUB74

TABLE OF CONTENTS

Chapter	Title and Contents	Page
1	**Understanding the Purpose of County Drainage Boards and Drainage Districts**	
	Introduction	1-1
	Common Questions About Drainage Districts	1-5
2	**Understanding the Responsibilities of Interested Parties**	
	County Drainage Board	2-1
	County Drainage Board Members	2-5
	Department of Agriculture, Trade and Consumer Protection	2-7
	Circuit Court	2-10
	Landowners	2-11
	Other County Officers	2-15
3	**Organizing County Drainage Boards and Drainage Districts**	
	Organization of the County Drainage Board	3-1
	Organization of a Drainage District	3-3
4	**Changing Drainage District Operations**	
	Designating District Drains	4-1
	Obstructing or Altering District Drains	4-2
	Structures Restricting Drainage	4-4
	Annexation	4-6
	Withdrawal	4-8
	Consolidation	4-8
	Suspension	4-9
	Dissolution	4-11
	Transfer	4-12

Chapter	Title and Contents	Page
5	**Conducting County Drainage Board Business**	
	Meetings	5-1
	Hearings and Hearing Procedures	5-2
	Notices	5-7
	Records Maintenance	5-13
	Inspection Requirements	5-15
	Reporting Requirements	5-17
6	**Maintaining and Improving Drainage District Facilities**	
	Assessment Procedures	6-1
	Changing Formally Established Specifications	6-9
	Maintenance and Repair Requirements	6-12
	Construction Projects	6-19
7	**Enforcing Orders, Approvals, and Other Actions in Drainage Districts**	
	County Drainage Board	7-1
	Department of Agriculture, Trade and Consumer Protection	7-2

List of Appendices (Tab 8)

Appendix A: Glossary and Definitions
Appendix B: History of Drainage Laws
Appendix C: Guide for District Specifications
Appendix D: Chapter ATCP 48, Wis. Admin. Code (Tab 9)
Appendix E: Chapter 88, Wis. Stats.
Appendix F: Other Commonly Used Statutes and Rules
Appendix G: Open Meeting Rules
Appendix H: Notice Requirements Summary Table (Tab 10)
Appendix I: Cheat Sheets
Appendix J: DATCP-Approved List of Drainage Engineers
Appendix K: Rainfall Table
Appendix L Memoranda of Understanding

Chapter 1

Understanding the Purpose of County Drainage Boards and Drainage Districts

INTRODUCTION

The Department of Agriculture, Trade and Consumer Protection is pleased to provide county drainage board members and other interested persons with this County Drainage Board Handbook, which is referred to as "handbook". This handbook explains the provisions of the statute (chapter 88, Wis. Stats.) and the administrative rule (chapter ATCP 48, Wisconsin Administrative Code) under which county drainage boards and drainage districts must operate. There are also some references to other codes and statutes that you may need to perform your duties. This handbook is designed to help county drainage boards carry out their responsibilities for administering drainage districts in their county.

The first version of the handbook was produced in July 1997. Chapter ATCP 48, Wis. Admin. Code, first became effective in June 1995 and was revised on September 1, 1999. The most recent revision to chapter ATCP 48, Wis. Admin. Code, became effective in February 2001. This version of the handbook incorporates the requirements of the revisions, and makes some general improvements to the handbook, as recommended by handbook users.

Appendix A of this handbook includes a glossary of the terms used throughout this handbook.

County Drainage Boards

A county drainage board is responsible for operating all drainage districts in the county. Because some drainage districts extend across more than one county, a county drainage board's jurisdiction may extend into another county. Drainage board members have a very serious responsibility. Drainage districts have major impacts on land use, and on individual landowners. The county drainage board must exercise its considerable power according to law, and with due regard to the rights and interests of those affected.

Legislation under ch. 88, Wis. Stats., provides extensive authorities and responsibilities to county drainage boards. The county drainage board assists the county circuit court in creating

drainage districts. After a drainage district is created, the county drainage board is responsible for:

- operating and maintaining district drains and dams within district drains;
- levying assessments against landowners who benefit from the drainage provided;
- awarding damages, as appropriate, to landowners injured by the construction and maintenance of district drains;
- inspecting the district drains and corridors;
- making or recommending modifications to a drainage district; and
- resolving drainage disputes, subject to applicable law.

Drainage Districts

Drainage districts are local governmental districts, which are organized to drain lands for agricultural or other purposes. Land is drained by drainage ditches or tiles that cross individual property boundaries. Landowners in a district who benefit from drainage must pay assessments to cover the cost of constructing, maintaining, and repairing the district drains.

The majority of the existing drainage districts in the state were formed in the early 1900s, although drainage laws date back to 1891. Appendix B includes a brief summary of the history of drainage laws, including ch. 88, Wis. Stats.

It is important to understand the distinction between "district drains" and "private drains". All of the ditches, tiles, and other drainage features within the boundaries of a drainage district are not automatically classified as "district drains"; some may be classified as "private drains". Chapter 4 discusses the criteria for classifying a drain as a "district drain". County drainage boards are responsible for the construction, operation, maintenance, and repair of district drains. Individual landowners are responsible for the construction, operation, maintenance, and repair of private drains; although a county drainage board can order a landowner to take action on a private drain if the private drain is causing harm to a district drain.

Drainage District Specifications

A county drainage board is required to have formally established specifications for every drainage district under its jurisdiction. Formally established specifications are those that have been established by a county circuit court order, or by a county drainage board under s. ATCP 48.20 or 48.21, Wis. Admin. Code. The specifications should include maps and descriptions which clearly show the following information:

- The boundaries of the drainage district, as last confirmed by the county circuit court or county drainage board.
- The location and extent (also referred to as alignment) of every district drain.
- The location and width of every district corridor.
- The grade profile for every district drain, as last confirmed by the county circuit court or county drainage board.
- The cross-sections for every district drain as last confirmed by the county circuit court or county drainage board.
- The location and cross section of every structure (dams and bulkheads, for example) located in a district drain.

The formally established drainage district specifications are the foundation for nearly everything that happens in a drainage district, such as:

- defining landowners' rights to drainage;
- establishing assessments and damage awards;
- operating structures in district drains;
- constructing new or supplemental district drains, and maintaining and repairing existing district drains;
- evaluating the effects of proposed drainage modifications; and
- resolving disputes between individual landowners, between landowners and the district, and between the district and outside parties.

Historically for many drainage districts, key specifications are missing, vague, or incomplete. This makes it difficult for county drainage boards to administer drainage districts and resolve drainage disputes. One of the top priorities of a county drainage board should be to put these specifications in order. If the specifications are missing or out of date, the county drainage board must take the legally required steps to correct the problem. Chapter 5 discusses the steps required to recreate missing specifications or to modify existing specifications.

County and Local Control

The operation of drainage districts is primarily a county and local matter. Primary responsibility for administering drainage districts and resolving drainage disputes resides with the county drainage board. The county drainage board must be prepared to carry out its responsibilities, which are explained in this handbook. The county drainage board may need to hire staff or contract work, including professional engineering work.

State Oversight and Assistance

Although county drainage boards are responsible for operating drainage districts and resolving local drainage disputes, the department is responsible for monitoring county drainage board and drainage district compliance with applicable law, including drainage district rules under ch. ATCP 48, Wis. Adm. Code. For example, a county drainage board must obtain the department's approval before undertaking a construction project in a drainage district. The department also provides certain technical advice and assistance, such as:

- general engineering advice and assistance to county drainage boards;
- review of mathematical drainage models;
- explanation of drainage district rules; and
- assistance in identifying engineers qualified to design drainage projects.

The department can also help county zoning administrators and county treasurers fulfill their responsibilities under the drainage district law. In addition, the department can help drainage consultants, assistants hired by county drainage boards, state and federal resource conservation agency personnel, and drainage district landowners.

The department will periodically update the handbook, and will distribute updates to handbook holders. If you need additional copies of the drainage handbook, or need further assistance, please contact the department at:

Department of Agriculture, Trade and Consumer Protection
Land and Water Resources Bureau
2811 Agriculture Drive
P.O. Box 8911
Madison, WI 53708-8911 Phone: (608) 224-4627

COMMON QUESTIONS ABOUT DRAINAGE DISTRICTS

This handbook was written for county drainage board members to aid them in the creation, operation, maintenance, and dissolution of drainage districts. This section is designed to help county drainage board members answer some frequently asked questions.

I own lands that are drained by both surface ditches and tiles. Am I in a drainage district?

Your lands are in a drainage district if either of the following apply:

- Your lands were included in a petition that was filed with, and approved by, the county circuit court, and the circuit court has not since ordered the dissolution of the drainage district.
- Your lands were included in a petition to annex lands into a drainage district, the circuit court or the county drainage board issued an order approving the annexation, and the circuit court has not since ordered dissolution of the drainage district or the court or drainage board has not removed the lands from the drainage district.

Once a drainage district is dissolved, it is no longer recognized as a legal drainage district, and is not subject to the standards and protections of the state laws and rules that govern drainage districts.

If your land is not in a drainage district, then your lands are drained by a private drainage system either completely on-farm or through a private agreement with neighboring landowners. For the most part, these private drains are not subject to the standards and protections of the state laws and rules that govern drainage districts.

If you are unsure whether your lands are in an organized drainage district, contact your county drainage board.

How are drainage districts organized?

A group of landowners, within an area proposing to be drained, or already drained but not part of a legally organized drainage district, may petition the county circuit court to be organized as a drainage district. A specific number of landowners are required to sign the petition, depending on the amount of land owned. The circuit court refers the petition to the county drainage board, and the county drainage board is then required to hold a hearing on the petition and report its findings in writing to the court.

How are drainage districts organized? (cont.)

If the proposed drainage district exceeds 200 acres, the county drainage board's report is also required to be sent to the department. If the county circuit court finds that the petition meets the legal criteria, and that the proposed drainage district meets certain criteria, then the county circuit court orders the organization of the drainage district.

What are the lands within a drainage district used for?

Lands within a drainage district can be used for both agricultural and non-agricultural purposes. Some of the uses for lands drained by drainage districts are:

- Agricultural production including: sod, mint, vegetables, potatoes, cranberries, corn, and other grain products; alfalfa; pasture; livestock; dairy; forestry; and timber production for paper products.
- Wildlife habitat on federal, state, and local lands. For example, lands may be drained for grassland habitat needed for prairie chickens.
- Private wildlife habitat, and private hunting or camping lands.
- Housing developments.
- Various types of development, including highway systems, airports, and sanitary district treatment plants.
- An outlet for the stormwater runoff from municipalities upstream from the drainage district.

Who is responsible for the operation of a drainage district?

The members of the county drainage board are responsible for the operation and maintenance of all drainage districts in the county. Where drainage district boundaries cross county lines, the county that has the majority of the drainage district lands in it has jurisdiction over the entire drainage district.

How do county drainage boards operate?

The county drainage board holds public meetings to discuss drainage issues within the drainage districts and to decide on a course of action. The county drainage board is required to ensure that all drainage districts under its jurisdiction comply with the standards in the drainage rule (ch. ATCP 48, Wis. Admin. Code) and statute (ch. 88, Wis. Stats.). To accomplish this, the county drainage board has the power to: annex or withdraw lands from a drainage district; purchase or lease equipment; levy assessments;

How do county drainage boards operate? (cont.)

obtain injunctions; hire attorneys, engineers, or other assistants; construct and maintain district drains; contract with governmental agencies; borrow money; and perform inspections.

What laws or rules affect drainage district operations?

Drainage of Lands, Chapter 88, Wis. Stats., and Drainage Districts, Chapter ATCP 48, Wis. Admin. Code, are the primary laws that directly affect the formation, operation, maintenance, and dissolution of drainage districts within Wisconsin.

The county drainage board is also required to satisfy other applicable provisions of state law that affect drainage district operation:

- Ch. 30, Wis. Stats., Navigable Waters, Harbors, and Navigation
- Ch. 31, Wis. Stats., Regulation of Dams and Bridges affecting Navigable Waters
- Ch. 985, Wis. Stats., Publication of Legal Notices
- Ch. 19, Wis. Stats., Subch. V, Open Meetings Laws of Governmental Bodies
- NR 345, Wis. Adm. Code, Dredging

How many drainage districts exist in Wisconsin and where are they located?

As of 2006, the Department of Agriculture, Trade and Consumer Protection is aware of about 200 drainage districts in Wisconsin. Of the 72 counties in Wisconsin, 27 of them contain one or more drainage districts. The majority of the drainage districts are located in the eastern and southeastern portions of the state.

How large are drainage districts?

The size of drainage districts varies widely within a county and across the state. In general, drainage districts range in size from about 50 acres to over 50,000 of acres.

In terms of the number of landowners in drainage districts, one county has a drainage district that consists of only one landowner while another county has a district that has over 1,000 landowners.

How many drainage districts does the county drainage board oversee?

The number of districts a county drainage board must oversee also varies greatly. Several counties have just one drainage district and others have over 30 separate drainage districts.

What are the advantages of being in a drainage district?

There are several advantages to being in a drainage district. Among the advantages are the following:

- Protection of established rights to drainage through laws that give the county drainage board the responsibility and authority to ensure that district drains are maintained.
- Have the authority to ensure that the actions of others do not adversely affect the drainage rights of individual landowners.
- Distribution of costs for operating, maintaining, and repairing district drains among all of the benefited landowners.
- Resolution of drainage disputes by the county drainage board. Rather than going to a county circuit court to resolve disputes involving drainage, landowners in the drainage district may go to the county drainage board. County drainage boards do not have the authority to resolve all types of drainage disputes, however.

Chapter 2

Understanding the Responsibilities of Interested Parties

COUNTY DRAINAGE BOARD

County Drainage Board Powers

- Adopt and use a corporate seal (s. 88.21(1), Wis. Stats.).
- Sue and be sued and settle suits and controversies (s. 88.21(2), Wis. Stats.).
- Bring actions necessary for the collection of monies owed to a district (s. 88.21(3), Wis. Stats.).
- Bring actions necessary to protect and preserve district drains and property (s. 88.21(3), Wis. Stats.).
- Obtain injunctions to prevent unlawful interference with the performance of its duties or the exercise of any of its powers (s. 88.21(4), Wis. Stats.).
- Employ lawyers, engineers, and other assistants (s. 88.21(5), Wis. Stats.).
  Note: Engineers must be on the DATCP-approved list. (See appendix J.)
- Purchase or condemn lands under ch. 32, Wis. Stats., as necessary for construction, cleanout, repair, and maintenance of drainage systems (s. 88.21(6), Wis. Stats.). This includes lands inside or outside of drainage district boundaries.
- Level or permit leveling of spoil banks and excavated materials to allow uses that will not interfere with the district drains (s. 88.21(8), Wis. Stats.).
- Purchase or lease equipment necessary to construct, maintain, or repair district drains. This includes equipment used for control of brush and weeds through use of herbicides (s. 88.21(9), Wis. Stats.).

Purchase, construct, maintain, and operate all levees, bulkheads, reservoirs, silt basins, holding basins, floodways, floodgates, and pumping machinery necessary for successful drainage or protection of any district or related area, whether inside or outside the district (s. 88.21(10), Wis. Stats.).

County Drainage Board Powers (cont.)

- Hold district meetings (s. 88.21(11), Wis. Stats.).
- Adopt rules and issue orders (s. 88.21(12), Wis. Stats.).
- Authorize its lawyer to represent an individual landowner with respect to any matter under ch. 88, Wis. Stats (s. 88.21(13), Wis. Stats.).
- Contract with the federal government or other agencies, as specified in s. 88.22, Wis. Stats.
- Levy assessments on drainage district members for costs of construction, repairs, and maintenance of district drains. Levy assessments for costs for other lawful expenditures, such as, legal fees, court costs, or expenses of county drainage board members conducting district business (s. 88.23(1), Wis. Stats.).
- Borrow money and issue notes or bonds based upon any assessments levied (s. 88.23(4), Wis. Stats.).
- Annex lands into a drainage district that receive a benefit from the drainage district (s. 88.77 and 88.78, Wis. Stats.).
- Withdraw lands from a drainage district that do not benefit from the drainage district (s. 88.80, Wis. Stats.).
- Form a sub-district for more thorough or different drainage in an area (s. 88.70, Wis. Stats.).
- Hold public hearings on assessments (s. ATCP 48.02(1), Wis. Admin. Code); annexation or withdrawal of lands (s. 88.77(3), 88.78(2), and 88.80(3), Wis. Stats.); suspension of operations (s. 88.81(1)(c), Wis. Stats.); reviewing the validity of an assessment order (s. 88.44(1), Wis. Stats.); borrowing money in excess of $8,000 (s. 88.54(4), Wis. Stats.); reassessing benefits (s. 88.46(2), Wis. Stats.); removing dams or other obstructions in drainage outlets (s. 88.72(2), Wis. Stats.); forming a sub-district (s. 88.70(2), Wis. Stats.); modifying formally established specifications (s. ATCP 48.22, Wis. Admin. Code); enlarging or supplementing district drains (s. 88.71, Wis. Stats.); or transferring a district to a city, village or town jurisdiction (s. 88.83(2), Wis. Stats.).
- Obtain local, state, or federal permits necessary for construction or maintenance activities related to a drainage district.

County Drainage Board Powers (cont.)

- Enter lands for the purposes of organizing a district, or inspecting, constructing, or maintaining district drains (s. 88.13, Wis. Stats.).

  Note: The county drainage board and its agents are not liable for trespass but are liable for unnecessary damages.
- Hold public hearings to settle disputes between drainage districts.
- Increase county drainage board membership from three members to five (s. 88.17(2), Wis. Stats.).
- Elect officers (s. 88.17(6), Wis. Stats.).
- Establish a per diem rate, not to exceed $40.00, for county drainage board members, and compensation rate for the county drainage board secretary (s. 88.17(7), Wis. Stats.).
- Levy cost assessments against municipalities located upstream of a drainage district for costs of enlarging or maintaining district drains to handle an increase in water flow from land within the municipality (s. 88.64(2), Wis. Stats.).
- Require landowners to provide proof that certain conditions have been met when withdrawing water from district drains or prohibit a landowner from withdrawing water. (s. ATCP 48.44(3), Wis. Admin. Code).
- Allow a landowner to row crop or place an obstruction in a district corridor, subject to conditions or limitations specified by the county drainage board (s. ATCP 48.24(5), Wis. Admin. Code).
- Allow the growth of woody vegetation in a district corridor if it does not prevent adequate access to the district drain (s. ATCP 48.28, Wis. Admin. Code).
- Prohibit the installation or modification of any structure in a district drain if the installation or modification causes a deviation from the formally established grade profile (s. ATCP 48.33, Wis. Admin. Code).
- Order the establishment of a public drain on private lands, at the request of, and expense of, the individual landowners (s. 88.94, Wis. Stats.).

  Note: Public drains may be outside an organized drainage district. (See Appendix E, s. 88.94, Wis. Stats.)

County Drainage Board Responsibilities

- Inspect all the district drains annually (s. 88.63(1), Wis. Stats.; s. ATCP 48.14(1), Wis. Admin. Code).
- Hold a public meeting each year to review the annual report (s. ATCP 48.14(3), Wis. Admin. Code).
- File reports as required under law (s. 88.24, Wis. Stats.; s. ATCP 48.14(3), 48.16(2), and 48.22(2), Wis. Admin. Code).
- Settle disputes between districts (s. 88.14, Wis. Stats.).
- Protect and preserve district drains and property.
- Design, construct and maintain district drains and corridors to:
  - Minimize soil erosion and movement of suspended solids into district drains (s. ATCP 48.30(2), Wis. Admin. Code).
  - Promote the public health or welfare and drain or protect lands with the least damages and greatest benefit to all of the affected lands.
- Inspect district drains and corridors within 3 weeks after a storm in excess of the 25-year, 24-hour rainfall event (s. ATCP 48.16, Wis. Admin. Code).

Note: See Table 1 in ch. ATCP 48, Wis. Admin. Code, for the 25-year, 24-hour rainfall depth for each county in Wisconsin.

- Prepare and submit specifications for each drainage district under its jurisdiction (s. ATCP 48.20, Wis. Admin. Code).
- Maintain district drains and corridors to conform to the formally established specifications (s. ATCP 48.26(5), Wis. Admin. Code).
- Obtain the department's approval prior to performing a construction project (s. ATCP 48.34, Wis. Admin. Code). Maintenance projects designed to bring district drains into compliance with the formally established specifications are not considered construction projects.

  Note: County drainage boards must submit a report to the department when planning a construction project. (See s. ATCP 48.36, Wis. Admin. Code.)

- Notify the department before beginning a maintenance project that will involve the removal of more than 3,000 cubic yards of material (s. ATCP 48.26(5), Wis. Admin. Code).

COUNTY DRAINAGE BOARD MEMBERS

Selection of Officers (s. 88.17 and 88.18, Wis. Stats.)

The county drainage board must elect a president (commonly referred to as the county drainage board chair) and a secretary. The county treasurer generally serves as treasurer for the county drainage board, although the county drainage board may also appoint a treasurer (s. 88.18, Wis. Stats.). The county drainage board may assign part or all of the county treasurer's duties to the county drainage board treasurer. The county drainage board treasurer acts as deputy of the county treasurer (s. 48.49(2), Wis. Adm. Code). The drainage board must enter into a written agreement with the appointed treasurer and the county treasurer. This agreement specifically spells the duties of each. County treasurers are not members of the county drainage board and do not receive per diem. A county drainage board deputy treasurer must post a bond and can be reimbursed for expenses.

Chair's Duties

- Select dates and times of hearings and regular business meetings of the county drainage board.
- Conduct all meetings and hearings in accordance with Wisconsin's open meetings laws. (See page 5-1.)

Call for a vote on each motion made at a meeting or hearing.

Secretary's Duties

- Act as legal custodian of all drainage records. (See pages 5-11 through 5-13.)
- Comply with public records law (See Appendix F, subch. II, ch. 19, Wis. Stats.)
- Prepare and issue all required notices. (See pages 5-6 through 5-10.)
- Prepare and maintain a book of meeting minutes (s. 88.19, Wis. Stats.).
- Maintain records on all county drainage board proceedings (s. 88.19(1), Wis. Stats.).
- Keep records of last confirmed benefits and costs assessments; maintain records on drainage payments (s. 88.19(2), Wis. Stats.).
- Certify past due assessments to municipal clerks (s. 88.42(1), Wis. Stats.).
- Distribute certain records to the department, county zoning administrator, and county (s. 88.19(4), Wis. Stats.).

County Drainage Board Member Duties

- Attend meetings and hearings of the county drainage board.
- Read and analyze submitted materials in preparation for county drainage board discussions and deliberations.
- Become familiar with drainage laws and practices.
- Keep an accurate record or log of services and expenses incurred in the performance of duties for each drainage district (s. 88.17(8), Wis. Stats.).

  Note: The log should include: date of activity, drainage district name, description of activity, and expense incurred.
- File bills for compensation and expenses with the treasurer for reimbursement (s. 88.17(8), Wis. Stats.).
- Notify the circuit court of county drainage board vacancies or term expirations (s. 88.17(2d), Wis. Stats.).
- Fill out inspection reports (see Appendix B) when conducting a site inspection. Report to the county drainage board on activities and observations at the next county drainage board meeting.
- File a certified copy of all assessments with the register of deeds (s. 88.40(1), Wis. Stats.).

Duty to Follow Previously Ordered Drainage Determinations (s. 88.32 and 88.35, Wis. Stats.; s. ATCP 48.34, Wis. Admin. Code)

When a drainage district is first formed, the county drainage board must clearly specify to the circuit court whether the drains proposed in the petition will best accomplish the drainage that is requested in the area that should be drained. If the drains proposed will not accomplish the desired results, the county drainage board must recommend other drains, or any increase or decrease in the area drained, in order to accomplish the expected drainage.

As it proceeds to lay out the drainage system in the newly organized district, the county drainage board must locate and design the district drains of sufficient depth and capacity to adequately drain the lands. The design plans for the drainage district must include the boundaries of the district, the location of all district drains, and the grade profiles of the district drains. These determinations become part of the permanent records of the district, and form the legal basis for determining benefits, awarding damages, assessing costs, and maintaining district drains.

Duty to Follow Previously Ordered Drainage Determinations (cont.)

A county drainage board must obtain approval from the department before pursuing projects that will change the formally established alignment, depth, profile, grade, capacity, or water level in a district drain. (See page 6-12.) Projects resulting in a change in any of these features are considered construction projects. The county drainage board must obtain the department's approval for changes to any of these features even if no physical work on the district drain will be required.

Note: "Formally established" means these established by an order of the county circuit court, or those legally established by a county drainage board under s. ATCP 48.21 or 48.22, Wis. Admin. Code.

DEPARTMENT OF AGRICULTURE, TRADE AND CONSUMER PROTECTION

Department's Duties and Authorities (s. 88.11, Wis. Stats.)

- Employ an engineer to provide technical assistance to improve district operations.
- Assist districts in developing hydrologic and hydraulic information about project effectiveness.
- Enter onto any lands to perform inspections of drainage districts to determine compliance with state laws.
- Review inspection reports and annual reports submitted by the county drainage boards.
- Establish performance standards for drainage district structures, ditches, maintenance and operations, in order to minimize adverse effects on water quality.
- Review and approve district maintenance plans, including plans for drainage, drainage control, soil conservation and water conservation.
- Review and approve designs for new drains and structures, and for proposed construction projects.
- Require alteration of plans, designs, and existing structures in order to achieve and maintain compliance with performance standards.
- Prepare environmental assessments and environmental impact statements for proposed construction projects, as necessary (s. ATCP 48.38(4) and (5), Wis. Admin. Code).

Department's Duties and Authorities (cont.)

- Coordinate drainage district activities with the Department of Natural Resources (DNR).

Note This also means compliance with the Memorandum of Understanding::

- Assist county drainage boards in applying for permits.
- Provide guidelines for compliance with federal and state agricultural and conservation programs.
- Provide guidance to county drainage boards and professional engineers.
- Maintain a list of professional engineers the department considers qualified to give competent advice on drainage matters (s. 88.21(5), Wis. Stats.).
- Establish procedures for assessments and reassessments.
- Issue a stop work order until necessary plans are approved or until a project complies with the law.
- Inspect and copy any records kept by the county drainage board, or by any private individual, business or governmental agency (s. 88.19(5), Wis. Stats., and s. ATCP 48.18(2)(a), Wis. Admin. Code).
- Conduct inspections or other investigations to verify county drainage board reports and determine compliance with statutes and rules (s. 88.11(1)(a), Wis. Stats., and s. ATCP 48.18(2)(b), Wis. Admin. Code).
- Investigate violations of the drainage statute or rule (s. ATCP 48.50, Wis. Admin. Code).
- Issue orders, without prior notice or hearing (s. ATCP 48.52(1), Wis. Admin. Code). (See page 7-2.)
- Conduct an informal or formal hearing for persons who feel adversely impacted by an order of the department (s. ATCP 48.54, Wis. Admin. Code).
- Bring an action in a circuit court to recover a civil forfeiture from any person who violates the statutes or rule.
- Authorize a variance for any standard or requirement of the administrative rule, as deemed necessary by the department (s. ATCP 48.56, Wis. Admin. Code).

  Note: A variance may not be granted for statutory requirements.
- Perform any functions related to drainage districts the department considers appropriate.

The Department Report (s. 88.11 and 88.35, Wis. Stats.)

The department is required by law to review and approve district plans and designs. In addition, the department will provide technical assistance and guidance to county drainage boards and the circuit courts in regard to drainage activities.

In particular, the department is required to assist the circuit court and the county drainage board when a new district is formed, when district drains are first laid out, when land is annexed to a district, or when construction projects are planned. In these situations, the department must prepare a report if the area proposed for drainage exceeds 200 acres. The department may direct the county drainage board or the petitioner(s) to make the necessary survey and evaluation for the report.

The department report must include all of the following:

- The location, design, feasibility, and cost of the proposed outlet drains.
- A general description of the additional drainage necessary to reclaim the land fully for general agricultural purposes, and the probable costs.
- A comparison of the benefits in the different parts of the district on the basis of the location and design of the proposed district drains.
- The physical features of the land to be drained.
- A report of the UW-Madison College of Agriculture and Life Sciences, which includes:
  - a description of the quality and character of soils and subsoils;
  - a soil map of the area;
  - the present agricultural value of the lands; and
  - the kind of crop to which lands will be adapted after drainage.

CIRCUIT COURT

County Drainage Board Creation and Appointments (s. 88.17(1), Wis. Stats.)	When the petition for organization of the first drainage district in a county is filed, the circuit court must appoint a county drainage board. Alternatively, when a county drainage board is not organized in a county that already has a drainage district, a landowner in the district or the department can petition the circuit court to appoint a county drainage board. The circuit court also fills any vacancies. (See page 3-1.)
Drainage District Creation (s. 88.34(3), Wis. Stats.)	After a petition is filed to organize a new drainage district, the circuit court decides whether to authorize the new drainage district. The decision is based, in part, on a report submitted by the county drainage board. (See page 3-3.) The circuit court must make the following findings: ɔ That the petition has the sufficient number of signers. ɔ That the lands described in the petition, along with any additional lands recommended by the county drainage board, will be improved by the proposed work. ɔ That the public health or welfare will be promoted. ɔ That the cost of construction will not exceed 75 percent of the benefits to be derived from the proposed work. ɔ That the proposed work will not materially injure or impair fish or wildlife habitat, scenic beauty, conservation of natural resources, or other public rights or interests.
Drainage District Dissolution (s. 88.82, Wis. Stats.)	A petition to dissolve a district must be filed with the circuit court. (See page 4-11.) The circuit court then holds a hearing to determine if the drainage district should be dissolved.
County Drainage Board Dissolution (s. 88.17(9), Wis. Stats.)	The circuit court may abolish a county drainage board if there are no longer any drainage districts under its jurisdiction.
Appeals of	If a landowner believes that a county drainage board is violating the statutes

County Drainage Board Decisions (s. 88.09, Wis. Stats., and s. ATCP 48.45, Wis. Admin. Code)

or rule, the landowner may file a written petition with the department that includes a description of the alleged violation. The department may perform an investigation to determine if the allegations are true. If the department determines that the county drainage board has violated the statutes or rule, the department will issue an order directing the county drainage board to correct the violation.

A landowner may also go to the circuit court to appeal decisions by the county drainage board. The petition to appeal the decision must be filed with the court within 30 days of the publication of the order or action. The circuit court may take evidence and may appoint a referee to submit a report. The circuit court may modify or even reverse a county drainage board decision.

A landowner does not have to petition the county drainage board or the department before deciding to take court action.

Enforcement of County Drainage Board Decisions

The circuit court may enforce an order of a county drainage board by issuing an injunction or by ordering some other appropriate relief.

LANDOWNERS

Responsibility to Notify the County Drainage Board (s. ATCP 48.40(2), Wis. Admin. Code)

All landowners are required to notify the county drainage board of any proposed activity that may affect a district drain in any way. This applies to any landowner, whether an individual, city, town, village, county, state, or business who owns lands that receive water from or discharge water to a drainage district, regardless of whether the land is included in the drainage district.

The landowner should provide written notification to the county drainage board describing the proposed action. The county drainage board may

Responsibility to Notify the County Drainage Board (cont.)

require the landowner to submit written detailed plans to the county drainage board prior to the proposed activity. The county drainage board will review the proposal at a regular county drainage board meeting. The county drainage board may approve the plans, may require that additional erosion control or sediment reduction measures be made a part of the plan (s. ATCP 48.30(6), Wis. Admin. Code), or may require additional information before approval of a proposal.

Note: Some proposed activities may also require pre-approval from the department, DNR, or other authorities.

Activities requiring landowners to give prior notification to the county drainage board include:

- Making land use changes.

  Note: Examples of changing land use include: grasslands into cropland, croplands into housing, cropland into wetlands, or pasture lands into croplands. Changes should be noted on the landowner's USDA-NRCS conservation plan, or other farm conservation plan on file at the county land conservation department office.
- Altering the flow of water into or from a district drain (s. ATCP 48.40(1)(a), Wis. Admin. Code).
- Cleaning, extending, or enlarging a private drainage ditch (s. 48.44(2), 48.40(1)(b), 48.40(1)(a), Wis. Admin. Code).
- Connecting a private drain to a district drain, including the installation of new field tiles, (s. 48.44(1), Wis. Admin. Code, and s. 88.92(1), Wis. Stats.).
- Installing private dams in private drainage ditches (s. 48.40(1)(a) and (c), Wis. Admin. Code).
- Removing existing district or private dams from ditches (s. 48.40(1)(a) and (b), Wis. Admin. Code).
- Disconnecting a private drain from a district drain (s. 48.42(1), Wis. Admin. Code).
- Removing other private or district ditch obstructions, such as: beaver dams, dead falls, sand bars, or sediment deposits (s. ATCP 48.40(1)(a) and (c), Wis. Admin. Code).
- Removing lands from inclusion in a district (s. ATCP 48.42(1), Wis. Admin. Code).

Withdrawing water from a district drain (s. ATCP 48.44, Wis. Admin. Code). *Note: Certain exceptions apply. (See pages 4-4.)*

Responsibility to

- Removing a spoil pile (s. 88.92(1), Wis. Stats.).

Notify the County Drainage Board (cont.)

- Placing a structure or obstruction in a district drain (s. ATCP 48.33 and 48.44, Wis. Admin. Code).

Note: Certain exceptions apply. (See pages 4-4.)

- Manipulating the water levels in the ditches (s. ATCP 48.40(1)(a) and (c), Wis. Admin. Code).
- Taking any action which affects the operation of the drainage district, or the costs incurred by the drainage district (s. ATCP 48.40(1)(c), Wis. Admin. Code).
- Row cropping or placing obstructions within the district corridor (s. ATCP 48.24(5), Wis. Admin. Code).

Other Responsibilities of Landowners

Landowners in the district must do the following:

- Allow access to district ditches and drainage corridors for inspection and maintenance (s. 88.13, Wis. Stats., and s. ATCP 48.12(1), Wis. Admin. Code).
- Establish erosion control practices, as necessary, on own lands (s. ATCP 48.30(5) and (6), Wis. Admin. Code). (See page 6-10.)
- Comply with lawful orders of the county drainage board.
- Pay cost assessments (s. 88.41, Wis. Stats.; s. ATCP 48.02(1), Wis. Admin. Code).

Landowners in the district may notify the county drainage board of any concerns in the operation of the district drains or any damages observed.

Failure to Comply

A county drainage board may take various actions in response to landowner actions that adversely affect a drainage district. (See pages 7-1 and 7-2.)

Rights of Landowners

A landowner in a drainage district has the right to:

- Access drainage, as provided in the formally established specifications for the drainage district.

Note: "Formally established" means these established by an order of the county circuit court, or those legally established by a county drainage board under s. ATCP 48.21 or 48.22, Wis. Admin. Code.

Rights of Landowners (cont.)

- Petition the court to organize or dissolve a drainage district (s. 88.27 and 88.82, Wis. Stats.).
- Petition the county drainage board to enlarge existing district drains or construct additional district drains to improve drainage (s. 88.71, Wis. Stats.).
- Petition the county drainage board to form a subdistrict to obtain more thorough drainage (s. 88.70, Wis. Stats.).
- Petition the county drainage board to hold a district meeting (s. 88.215, Wis. Stats.).
- Petition the county drainage board to conduct a benefits reassessment (s. 88.46, Wis. Stats., and s. ATCP 48.06(2)(b), Wis. Admin. Code).
- Petition the county drainage board to annex or withdraw lands from an existing drainage district (s. 88.78 and 88.80. Wis. Stats.).
- Petition the county drainage board to suspend the operation of a district (s. 88.81, Wis. Stats.).
- Petition the county drainage board to restore, repair, maintain, or modify a district drain in order to bring it into compliance with the formally established specifications (s. ATCP 48.45(1)(a)1, Wis. Admin. Code).
- Petition the county drainage board to remove dams or other obstructions to provide an adequate outlet (s. 88.72, Wis. Stats.; s. ATCP 48.45(1)(a)2, Wis. Admin. Code).
- Petition the county drainage board to correct a violation of ch. 88, Wis. Stats., or ch. ATCP 48, Wis. Admin. Code (s. ATCP 48.45(1)(a)3, Wis. Admin. Code).

Appeal decisions of the county drainage board made by rule or order to the circuit court (s. 88.09, Wis. Stats.).

OTHER COUNTY OFFICERS

County Treasurer's Duties (s. 88.18, Wis. Stats.)	∋ Collect monies, including assessments, penalties, or interest, payable to drainage districts. ∋ Keep separate accounts for each drainage district. ∋ Retain, if necessary, for the benefit of the county, a portion of the interest received on drainage district funds. The retained funds may not exceed the costs of the county treasurer's services, the cost of the zoning administrator in maintaining county drainage board records, and the costs to the zoning administrator for providing copies of records to the county drainage board or the public.
County Zoning Administrator's Duties (s. 88.19(7), Wis. Stats.)	∋ Keep all copies of county drainage board records submitted by the county drainage board secretary and the department. ∋ Act as the public access point for the drainage district records and maps, and provide copies as requested by the county drainage board or the public.

Chapter 3

Organizing County Drainage Boards and Drainage Districts

ORGANIZATION OF THE COUNTY DRAINAGE BOARD

Appointment and Term of Members (s. 88.17, Wis. Stats.)

County drainage board members are appointed by the circuit court. The original county drainage board must consist of three members, though the county drainage board may later increase its membership to five by passing a county drainage board rule at any regular meeting. The original members serve staggered one-, two-, and three-year terms. Any subsequent county drainage board members have terms of three years. When a member's term expires, the member continues to serve until a successor is appointed by the circuit court and files the official oath.

County Drainage Board Vacancies (s. 88.17, Wis. Stats.)

The county drainage board must notify the circuit court of any vacant positions. The circuit court appoints a successor selected from among those persons who have been recommended by either of the following:

- The county agriculture & extension education committee, which should submit at least three names for each vacancy, or
- Three or more landowners owning property in a drainage district in the county.

If a position has been vacant for longer than six months, the department or a landowner in the district can petition the circuit court to fill the vacancy.

Member Qualifications (s. 88.17, Wis. Stats.)

One county drainage board member must be an experienced farmer who is familiar with drainage, and one other member must be familiar to some extent with drainage engineering. Owning land within one of the drainage districts within the county <u>does not</u> disqualify a person from being a county drainage board member. That member can ask the circuit court to appoint a substitute to act when the matter involves that member's drainage district.

Expenses and

County drainage board members are reimbursed from drainage district funds

Compensation (s. 88.17, Wis. Stats.)	for actual and reasonable expenses incurred in the performance of their duties. The county drainage board may also authorize a per diem, not to exceed $40. In addition, the county board may reimburse county drainage board members for costs incurred on behalf of the county. Any appointed deputy treasurer, excluding the county treasurer, may be compensated for actual and reasonable expenses.
Limited Liability of County Drainage Board Members (s. 88.172, Wis. Stats.)	A county drainage board member is generally not personally liable for damages, settlements, fees, fines, penalties, or other liabilities because of actions taken or not taken as a county drainage board member. A county drainage board member could be found liable, however, if any of the following can be proven: ɔ A willful failure to deal fairly with any person when the county drainage board member has a material conflict of interest in the matter. ɔ A violation of criminal law, unless the county drainage board member had reasonable cause to believe the conduct was lawful. ɔ Improper personal profit to a county drainage board member. ɔ Willful misconduct. Protection does not generally apply to actions brought by a governmental unit or agency, or in certain special types of actions under state or federal laws. See Wisconsin Act 456
Limitation on County Drainage Board Liability (s. 893.80, Wis. Stats.)	If a county drainage board or its members or agents are found liable for damages, the maximum amount recoverable is $50,000.
Conflict of Interest (s. 88.20, Wis. Stats.)	No county drainage board member may deal in drainage district securities, or have interest directly or indirectly in: ɔ any contract with the county drainage board; ɔ any contract for work or materials for a drainage district;
Conflict of	ɔ any contract for sale of machinery or materials for, or to, the county

Interest (cont.)	drainage board; or ɔ wages or supplies for persons employed to work in, or for, a drainage district.

ORGANIZATION OF A DRAINAGE DISTRICT

Eligible Petitioners (s. 88.27(1), Wis. Stats.)	Either of the following may file a petition with the circuit court for organization of a drainage district: ɔ Owners of more than 1/2 of the area proposed to be organized into a drainage district. The state may not be a petitioner. ɔ The majority of landowners in the area proposed to be organized into a drainage district. In addition, the majority of landowners must represent at least 1/3 of the lands in the proposed district. State-owned land does not qualify.
Contents of Petition (s. 88.28(1), Wis. Stats.)	The petition must contain the following information: ɔ A description of the lands to be included. ɔ Statements that: • the lands will be improved by drainage; • the public health or public welfare will be promoted by drainage; and, • the cost of construction will not exceed 75% of the appraised benefits arising from such drainage. ɔ A map or sketch of the lands, showing proposed district drains. ɔ A proposed name or number for the district. ɔ The names and addresses of all owners and mortgagees of land to be included. ɔ Descriptions of any drains previously constructed under any state law.
Referral to the County Drainage Board	Upon receipt of the petition, the circuit court must first refer the petition to the county drainage board (s. 88.29(1), Wis. Stats.). If no county drainage board exists, the circuit court must first create the county drainage board. The circuit court will then order the county drainage board to prepare a report and which includes a recommendation on whether the proposed district should be organized (s. 88.32, Wis. Stats.).
Role of the	In preparing its report to the circuit court, the county drainage board must

Drainage Board

Analyze

(s. 88.29(2), Wis. Stats.)

do all of the following:

- Hire an engineer on the DATCP-approved list to do the following:
  - Examine the lands to be included, and all other lands the county drainage board believes will be benefited or damaged by the proposed work.
  - Consider whether the proposed district drains are satisfactory to accomplish the expected drainage.

Hold Hearing

(s. 88.29, Wis. Stats.)

- Publish a class 3 notice of hearing. (See pages 5-6 through 5-10.)
- Mail notices to the chair of the county highway committee or highway commissioner, the chair of the county land conservation committee, the DNR Secretary, the department, any railway company involved, and all landowners and mortgagees of lands affected.
- Hold a public hearing to obtain comments from all interested persons.

Report

(s. 88.32(1), Wis. Stats.)

- Prepare a written report which includes the following information:
  - Whether the petition has the required number of signers.
  - Whether the lands in the petition will be improved by drainage.
  - Whether other lands in the vicinity also require drainage.
  - Whether the proposed drainage is feasible.
  - Whether the public health or public welfare will be promoted by the proposed work. The county drainage board must consider whether the cumulative effects of drainage over time will affect water temperatures or water levels of lakes, streams or subterranean sources of water supply, and whether the need to drain land for cultivation or other purposes is sufficiently great to warrant the possible harmful effects noted.
  - The area that should be drained.

    Note: The county drainage board may recommend an increase or decrease in the area to be drained.

  - Whether the benefits of such work will exceed the costs of construction by the required amount.
  - Whether the district drains proposed in the petition will best accomplish the drainage requested.

    Note: The county drainage board may recommend other district drains as necessary.

Role of the County Drainage Board (cont.)

- Other facts that the county drainage board feels will aid the circuit court in its decision

Filing Report
(s. 88.32, Wis. Stats.)

- File the report with the circuit court within 30 days after final adjournment of the public hearing. The county drainage board must also file proof with the circuit court that proper notice of a public hearing was given, and the minutes of that hearing.
- If the district exceeds 200 acres, file the report with the department before filing with the circuit court. The department has 45 days to file its own report with the circuit court and make recommendations for approval or disapproval of the creation of the district.

Role of the Circuit Court (s. 88.34, Wis. Stats.)

When the circuit court has received the report of the county drainage board and any required report from the department, the circuit court must schedule a hearing. The circuit court must publish a class 3 notice, and mail the notice to the same individuals the county drainage board was required to notify.

The circuit court must order the organization of the district and file the order with the register of deeds, if it finds all of the following:

- The petition has the sufficient number of signers.
- The lands recommended by the county drainage board for inclusion in the district will be improved by drainage.
- The public health or public welfare will be promoted by drainage.
- The cost of construction will not exceed 75% of the benefits derived from the work, or the petitioners have posted sufficient bond or monies to pay for the portion exceeding 75% of the benefits.
- The proposed work will not materially injure or impair fish or wildlife habitat, scenic beauty, the conservation of natural resources, or other public rights or interests.

Initial Startup by the County Drainage Board (s. 88.35, Wis. Stats.)

Upon organization of the district, the county drainage board must, with the help of an engineer from the DATCP-approved list, lay out the district drains to adequately drain the lands proposed to be drained, assess the benefits to each parcel, award damages as necessary, estimate the costs of construction, assess the costs of construction in proportion to the benefits

Initial Startup by the County Drainage Board (cont.)

received, and estimate the annual costs of maintenance and operation of the district.

Laying out District Drains

The county drainage board must hire an engineer from the DATCP-approved list to prepare profiles showing the grades of all district drains, and maps showing the boundaries of the district and the proposed location of all district drains. In establishing the district drains for the drainage district, the county drainage board is not confined to the location, depth, number, route or size of the district drains as stated in the petition, but may lay out the drainage system in the manner that the county drainage board considers best to adequately drain the lands proposed to be drained. The county drainage board may also include additional lands it feels are appropriate using annexation procedures (see page 4-6), or it may exclude lands through withdrawal procedures (see page 4-8).

Permits

If navigable waters are affected by the proposed drainage, the county drainage board must obtain any necessary permits under chs. 30 & 31, Wis. Stats., and other applicable laws from the DNR or other authorities.

Assessments

The county drainage board must also assess benefits, award damages, and assess costs. (See pages 6-1 through 6-6.)

Report and DATCP Approval

After completing its design work, the county drainage board must prepare a written report including profiles, maps, assessments, and damage awards. If the area exceeds 200 acres, the report must be sent to the department, which then has 45 days to review and approve or disapprove the report.

Note: Any construction project, including initial startup, must receive prior approval of the department (s. ATCP 48.34, Wis. Admin. Code).

Hearing
(s. 88.36, Wis. Stats.)

The county drainage board must also hold another public hearing, noticed in the same way as the previous hearing, on this report. The county drainage board may amend or modify the report as necessary. Upon a determination by the county drainage board that the report is final, the county drainage board issues an order confirming the assessments and awards for damages. After receiving all permits and approvals, the county drainage board proceeds with the work outlined in the order.

Chapter 4

Changing Drainage District Operations

DESIGNATING DISTRICT DRAINS

Requirements for Designating a District Drain (s. ATCP 48.20(5), Wis. Admin. Code)

Drains within the limits of a drainage district can be classified as "district drains" or "private drains". County drainage boards are responsible for the construction (unless the drain is already in existence), operation, maintenance, and repair of district drains. Individual landowners are responsible for the construction, operation, maintenance, and repair of private drains. Drains which collect water from more than one landowner are not automatically classified as district drains.

In general, a drain is classified as a district drain if it is designated as such by the circuit court and shown on the approved specifications as a district drain. Circuit courts generally considered the drains shown on the map creating a drainage district to be the district drains. A drain can also be classified as a district drain if the county drainage board does any of the following:

- Documents by a circuit court order that the drain has been classified as a district drain.
- Documents that the drain has historically been operated and maintained as a district drain. This may include, for example, documentation that the drain has been cleaned in the past by the county drainage board and that the cleanout was paid for by the drainage district landowners.
- Obtains the written consent of every landowner who owns or holds easement to land on which the drain is located.
- Purchases or condemns all of the land required for that drain. If the drain is a ditch, the county drainage board must also purchase or condemn the land required for the 20-foot corridor on both sides of the district ditch. (See s. 88.21(6) and ch. 32, Wis. Stats.)
- Properly designates the drain as a district drain under s. 88.73 or 88.77 to 88.791, Wis. Stats.

Revising Specifications (s. ATCP 48.21(2)(b), Wis. Admin. Code)

Any time a drain is newly designated as a district drain, the county drainage board must revise the specifications (map) of the drainage district and submit a copy of the revised map to the department, the county zoning administrator, and the county register of deeds. The revised map must clearly show the new district drain. The county drainage board must also submit proof that the process of designating the drain as a district drain was in compliance with the requirements outlined above.

OBSTRUCTING OR ALTERING DISTRICT DRAINS

Requirements for Obstructing or Altering District Drains (s. ATCP 48.44, Wis. Admin. Code)

No one may obstruct or alter a district drain without first receiving written approval from the county drainage board.

Exceptions: An owner of land adjacent to a district drain may withdraw water from a district drain without the county drainage board's prior approval. This can include placing a structure in a district drain to allow the withdrawal of water. All of the following must apply in these situations:

- Before withdrawing the water or placing the obstruction in the district drain, the landowner must notify the county drainage board under s. ATCP 48.40, Wis. Admin. Code.
- If a permit is required under s. 30.18(2)(a)2, the landowner obtains a permit from the DNR.
- The obstruction does not elevate the water surface elevation in the district drain above the base flow elevation specified as part of the formally established grade profile for that district drain.
- If the district drain has navigable stream history, neither the obstruction nor the withdrawal of the water reduces the base flow below the minimum base flow required by the DNR for that district drain.

Requirements for Obstructing or Altering District Drains (cont.)

- The withdrawal of water causes or makes a district drain more vulnerable to any of the following:
  - damage to any structure in a district drain
  - deposition of excavated materials in a district drain
  - weakening, undercutting,
  - or accelerated erosion of any sidebank in a district drain

Removing Obstructions

Landowner Petitions (s. ATCP 48.45(1)(a), Wis. Admin. Code)

A landowner may petition the county drainage board to remove an obstruction that was placed in a district drain in violation of these requirements. If the obstruction was placed without the written approval of the county drainage board, or if the obstruction was placed without meeting the requirements of the "Exceptions" described above, the county drainage board can order the obstruction to be removed at the expense of the landowner who placed the obstruction.

County Drainage Board's Response to Petition (s. ATCP 48.44, Wis. Admin. Code)

A county drainage board can request additional information when it receives a request to place an obstruction in a district drain, or when it has been notified by a landowner adjacent to a district drain that they are planning to place an obstruction in a district drain (see "Exceptions" on page 4-2). For instance, a county drainage board can require a landowner to demonstrate that they have met all of the required conditions for placing an obstruction in a district drain to withdrawal water (see "Exception" on page 4-2).

A county drainage board can issue a written order prohibiting a landowner from withdrawing water if the drainage board concludes that the withdrawal violates any of the requirements of ch. ATCP 48, Wis. Admin. Code. The county drainage board must include the basis for refusing to allow the withdrawal of water in the written order.

STRUCTURES RESTRICTING DRAINAGE

Requirements (s. ATCP 48.33, Wis. Admin. Code)

County drainage boards may not install or modify any structure, or allow any other person to install or modify a structure, in a district drain if it will cause either of the following:

- a rise in the water level above the water level shown on the formally established grade profile for that district drain
- a slow down in the runoff of water from upstream lands

Exceptions

The following temporary modifications are allowable:

To Protect Public Health, Welfare, and Safety

- The placement of a temporary structure, or the modification of an existing structure, in a district drain if it is necessary to protect the public health, safety, or welfare.

To Perform Construction or Maintenance Activities

- The placement of a temporary structure, or the modification of an existing structure, in a district drain if it is necessary for construction or maintenance activities allowed under ch. 88, Wis. Stats., and ch. ATCP 48, Wis. Admin. Code.

To Provide Relief During a Drought

- The placement of a temporary structure, or the modification of an existing structure, in a district drain to provide essential crop irrigation during a drought, if <u>all</u> of the following apply:

- The county drainage board gives written notification of the proposed structure or modification to every affected upstream landowner. An affected landowner is one whose flow of water will be impeded. Affected lands may include lands within the district that could <u>potentially</u> be drained further by the construction of additional drains that would discharge into existing district drains. The county drainage board has resolved, to the satisfaction of all objecting landowners, every objection made by upstream landowners who will be affected. The county drainage board may require the landowner wishing to install or modify a structure to follow certain conditions in order to resolve a landowner's objection.
- The county drainage board has approved the structure or modification. The county drainage board may include written

Exceptions

conditions in their approval of the structure if the county drainage

(cont.)

For Cranberry Operations

board feels the conditions are necessary to protect the public interest and the interests of all landowners in the drainage district.

- The placement of a temporary structure, or the modification of an existing structure, in a district drain to provide water for cranberry harvest, or for cranberry winter ice cover, if all of the following apply:
  - The structure or modification will not be installed for more than 14 days for cranberry harvest, and not more than 14 days for winter ice cover. A cranberry grower can request the county drainage board to allow an extension to the allowed 14-day period. The cranberry grower must demonstrate that the extension is needed for good reasons. The county drainage board may allow an extension of up to 7 more days.

Note: If the county drainage board approves an extension, the extension would be for one time only, and would not allow the cranberry grower to continue this extension without receiving proper county drainage board approval for each incident that the grower would like to extend the allowable 14-day period.

  - The county drainage board gives written notice of the proposed structure or modification to every upstream landowner whose flow of water will be impeded. Affected lands may include lands within the district that could potentially be drained further by the construction of new private or district drains that would discharge into existing district drains.
  - The county drainage board has resolved, to the satisfaction of all objecting landowners, every objection made by upstream landowners who will be affected. The county drainage board may require the cranberry grower to follow certain conditions in order to resolve an affected landowner's objection.
  - The county drainage board approves the structure or modification. A county drainage board may include written conditions in their approval if the county drainage board thinks the conditions are necessary to protect the public interest and the interests of all landowners in the drainage district.

Note: A person installing or modifying a structure in a district drain may also need a permit from the Wisconsin Department of Natural Resources if the district drain has a navigable stream history.

ANNEXATION

Annexation of Lands

A county drainage board may annex lands into an existing drainage district if:

- landowners adjacent to the district petition the county drainage board to be included in the district (s. 88.77, Wis. Stats.); or
- lands outside the district are receiving benefit (s. 88.78, Wis. Stats.).

Petition

To annex undrained lands (s. 88.77, Wis. Stats.):

A petition must be filed with the county drainage board which is signed by either:

- more than 1/2 of all landowners in the proposed annexation area, representing more than 1/3 of the lands, OR
- owners of more than 1/2 of the lands to be annexed.

The petition must describe the lands, name all known landowners, and include a plat map showing the original district and the proposed annexation.

Department Report and Approval

If the undrained portion of the lands to be annexed exceeds 200 acres, the county drainage board must request a report from the department and the UW College of Agriculture and Life Sciences. (See page 2-7.) Within 60 days of the request, the department must approve or disapprove the annexation.

Note: The department reports and approval are not required for smaller amounts of land.

Hearing

The county drainage board must hold a public hearing on the petition. If the undrained portion of lands to be annexed exceeds 200 acres, the hearing must be held after the county drainage board receives the report required from the department (see above). A class 3 notice must be published, with a mailing to all owners and mortgagees of affected lands, the chair of the county highway committee or the highway commissioner, the chair of the land conservation committee, the DNR, the department, and any affected railway company. (See pages 5-6 through 5-10.)

County Drainage

The county drainage board must order annexation of the lands if it finds all

of the following:

- The petition has the sufficient number of signers.
- The lands described in the petition will be improved.
- The public health or welfare will be promoted.
- The costs for construction will not exceed 75 percent of the benefits.
  Note: Alternatively, the petitioners may agree to pay the costs which exceed 75% of the benefits.
- The work will not materially injure or impair fish or wildlife habitat, scenic beauty, conservation of natural resources, or other public rights or interests.

After ordering annexation, the county drainage board must lay out district drains in the same manner as the initial startup of the drainage district, and assess benefits for the annexed land. (See pages 3-5 to 3-6.)

To annex benefited lands (s. 88.78, Wis. Stats.):
A county drainage board may also annex lands outside the district which have been receiving a benefit from drainage in the district. The benefit may have been previously overlooked, or private drains may have been extended onto adjacent land, increasing the originally drained area.

In this situation, any landowner in the drainage district may file a petition to have the benefited lands annexed and assessed benefits. The county drainage board must then do the following:

- Schedule a date for a hearing on the petition. The hearing must be held within 20 days after receiving the petition.
- Provide notice of the contents of the petition and the date of the hearing to the owners of the lands proposed to be annexed. The notice should indicate that the landowners must show cause why their lands should not be brought into the district and assessed.
- Hold a public hearing on the proposed annexation. A class 3 notice and mailing are required as in the annexation process above. If the drainage board finds that any of the lands are benefited, it must order the annexation, and assess benefits and costs to the annexed lands.
- Issue an order based on its findings and determinations after hearing.

WITHDRAWAL

Withdrawal of Lands (s. 88.80, Wis. Stats.)

Conditions

Any landowner within a drainage district may petition the county drainage board to withdraw lands from the district if <u>all</u> of the following conditions exist:

- All benefits assessed against the lands have been paid.
- The lands receive no benefit from the drainage district.
- The district will not be materially injured by the withdrawal.

Hearing

The county drainage board must schedule a public hearing on the withdrawal and publish a class 3 notice, with mailing to all owners of affected lands, the chair of the county highway committee or the highway commissioner, the chair of the land conservation committee, the DNR, the department, and any affected railway company.

County Drainage Board Order

If the county drainage board determines that the conditions are satisfied, the county drainage board must issue an order withdrawing the lands from the drainage district. The county drainage board may require the petitioner to pay for the hearing expenses.

CONSOLIDATION

Consolidation of Drainage Districts

Two or more drainage districts may be consolidated by the circuit court or by the county drainage board.

Petition

Consolidation by the county drainage board (s. 88.791, Wis. Stats.): The petition to consolidate the districts must be signed by the owners of at least 10% of the land in each of the districts.

Hearing

The county drainage board must schedule a public hearing on the petition, and publish a class 3 notice with mailing to all owners of affected lands, the chair of the county highway committee or the highway commissioner, chair of the land conservation committee, the DNR, the department, and any affected railway company.

Consolidation of Drainage Districts (cont.)

County Drainage Board Order

If the county drainage board finds the districts will benefit from consolidation, it must order the consolidation and give the district a new name. All previous assessments remain in effect, though the county drainage board may need to reassess benefits in the consolidated district to make them uniform or equitable for future cost assessments.

Consolidation by the circuit court (s. 88.34(7), Wis. Stats.):
The circuit court may order the consolidation of two or more drainage districts that are in the process of organization. The circuit court may act based on a petition from the county drainage board, owners in the districts, or its own motion. After a public hearing, the circuit court issues its order.

SUSPENSION

Suspension of District Operations (s. 88.81, Wis. Stats.)

A county drainage board can order the suspension of the operations of a drainage district after a public hearing on a petition to suspend. The order does not dissolve the district. County drainage boards are still responsible for meeting their existing obligations, including those of the rule and statutes in effect at the time of the order of suspension. For example, county drainage boards may still be required to submit the specifications required by s. ATCP 48.20, Wis. Admin. Code.

Petition

The number of landowners who must sign the petition varies:

- If the district has been organized for more than two years, the petition must be signed by landowners representing 67 percent or more of the confirmed benefits. State-owned land receiving benefits may not be included.
- If the district has been organized for less than two years, the petition must be signed by landowners representing 90 percent or more of the confirmed benefits. State-owned land receiving benefits may not be included.
- If it has been at least 20 years since the last cost assessment was made, the petition only needs the signature of one landowner in the district. No state agency may petition to suspend operations.

Suspension of

The county drainage board must schedule a public hearing after receipt of

District Operations (cont.)

Hearing

the petition, and publish a class 3 notice with mailing to all owners of affected lands, the chair of the county highway committee or the highway commissioner, the chair of the land conservation committee, the DNR, the department, and any affected railway company.

Standards

The county drainage board must issue an order suspending activities in a drainage district if all of the following conditions are met:

- The county drainage board finds the petition is signed by the required number of landowners.
- The county drainage board finds proper notice of hearing was given.
- The petitioner(s) pay all expenses of the hearing and all expenses of current district projects whose completion would be affected by the order.

Effect of Order

The district remains liable for all its debts existing at the time, and the county drainage board must continue to levy assessments for costs to meet the existing obligations of the district.

Renewing Operations

If the suspension was ordered by the county drainage board:
To reinstate operations in a district, the previously stated number of landowners must file a petition with the county drainage board. If a properly noticed public hearing convinces the county drainage board to lift the suspension, the county drainage board may then issue the order.

If the suspension was ordered by the county circuit court:
In some cases, the circuit court may have issued an order suspending work in a district. The board can reinstate operations in the district the same as if the board had ordered the suspension.

Note: Under old statutes, circuit courts were given the authority to order the suspension of work in districts. The statutes have been changed to give county drainage boards this authority.

Expenses

The petitioners are required to pay for the hearing expenses and all expenses, if any, incurred in connection with specific current projects whose completion will be affected by the suspension order.

DISSOLUTION

Dissolution of Drainage District (s. 88.82, Wis. Stats.)

A drainage district can be dissolved only by an order of the circuit court. The order for dissolution is entered by the circuit court after a hearing is conducted on a petition to dissolve.

Petition

The number of landowners who must sign the petition varies:

- If the district has been organized for more than two years, the petition must be signed by landowners representing 67 percent or more of the confirmed benefits. State-owned lands may not be included.
- If the district has been organized for less than two years, the petition must be signed by landowners representing 90 percent or more of the confirmed benefits. State-owned land receiving benefits may not be included.
- If it has been at least 20 years since the last cost assessment was made, the petition needs the signature of only one landowner in the district. State agencies may not petition to dissolve a district.
- If a district has been inactive for six or more years, the county treasurer may petition to dissolve the district.
- If all of the district land has been incorporated in cities or villages, the county board may petition to dissolve a district.

Hearing

The circuit court must schedule a public hearing after receipt of the petition, and publish a class 3 notice with mailing to all owners of affected lands, the chair of the county highway committee or the highway commissioner, the chair of the land conservation committee, the DNR, the department, and any affected railway company.

Standards

The circuit court may order dissolution of an entire district if it finds <u>all</u> of the following:

- The petition is signed by the required number of landowners.
- The public welfare will be promoted by the dissolution of the district.
- All debts have been paid, funds to pay them have been deposited with the county treasurer, or all lands have been assessed in full and the assessments paid.

Dissolution of Drainage District (cont.)

Effect of Order

The county treasurer must distribute any remaining district funds in proportion to the confirmed benefits. District drains remain common waterways for the use of all landowners in the dissolved district. Any landowner may make repairs at the landowner's expense. Landowners must obtain approval from other landowners prior to entering neighboring lands. Any person who obstructs or injures the drains is liable for all damages and may be fined by the circuit court.

Note: A permit may be needed from the DNR prior to making repairs.

TRANSFER

Transfer of District to City, Village, or Town Jurisdiction (s. 88.83, Wis. Stats.)

All of the lands of a drainage district lying within the limits of a city, village, or town may be transferred from the county drainage board to the city, village, or town jurisdiction. District lands outside the particular jurisdiction are not affected by the transfer.

Petition

Either of the following may petition the county drainage board for a transfer:

- The owners of the majority of the land that lies within the limits of the city, village, or town.
- The city, village, or town may pass a resolution to accept the specified drains and administer them under the city, village, or town drainage laws as in the public interest. The resolution must be published as a class 1 (1 attachment) notice. The local jurisdiction then files a petition with the county drainage board requesting transfer of the lands.

Hearing

The county drainage board must schedule a public hearing after receipt of the petition, and publish a class 3 notice with mailing to all owners of affected lands, the chair of the county highway committee or the highway commissioner, the chair of the land conservation committee, the DNR, the department, and any affected railway company.

Transfer of District to City, Village, or Town Jurisdiction (cont.)

Standards

The county drainage board must issue an order transferring the lands if all of the following conditions are met:

- The petition is signed by the required number of landowners,

  OR

  At least 30 days have elapsed since the class 1 publication of the resolution of the local jurisdiction requesting the transfer.
- The county drainage board verifies that the land in the petition is located entirely within the limits of the city, village, or town.

Note: This does not mean that the entire district has to be in the city, village, or town just the portion to be transferred.

Effect of Order

After the order of transfer, all proceedings in regard to the former district or part of a district must be under the city, village, or town drainage laws. The county treasurer must also transfer all district funds, or the proportionate share of district funds less any proportionate share of outstanding district indebtedness, to the local jurisdiction. The county drainage board is not responsible for any drainage district, or portion thereof, transferred to the city, village, or town's jurisdiction.

Note: The Drainage Board must make sure that the transfer will not interfere with the operation and maintenance of the any portion of the district still under the board's jurisdiction.

Chapter 5

Conducting County Drainage Board Business

MEETINGS

Official Business Meetings

All meetings of the county drainage board are subject to the open meetings law (s. 88.065, Wis. Stats.). (See Appendix F, subch. V, ch. 19, Wis. Stats., and Appendix H.) Public notice must be given to news media, any other persons that have requested notice, and to the official newspaper designated by the county board under ch. 985, Wis. Stats.

A meeting of the county drainage board occurs when one-half or more of the county drainage board members are present for the purpose of exercising the responsibilities and authority vested in the county drainage board (s. ATCP 48.17(6), Wis. Admin. Code). Meetings may be held by telephone conference calls. The county drainage board must hold at least one public meeting each year (s. ATCP 48.14, Wis. Admin. Code). The county drainage board may also hold a hearing during the course of a meeting. (See pages 5-2 through 5-5.)

Informal Gatherings (s. 88.065(5), Wis. Stats.)

An official meeting does not include a social or chance gathering, unless it was intended to take some action or make some decision at the gathering. In addition, the statutes list several exempt activities which do not fall within the definition of a meeting. Exempt activities include:

- Observing, supervising, or undertaking the construction, maintenance, or improvement of district drains.
- Observing, supervising, or undertaking the construction or maintenance of highways, railroads, bridges, utilities, or other similar structures that may affect district drains in any district.
- Collecting information by observing, surveying, or talking with an affected landowner at the site of an existing or proposed ditch.
- Responding to natural disasters affecting a district drain.

Informal Gatherings (cont.) (s. 88.065, Wis. Stats.)	The county drainage board is not required to give public notice for any of these exempt activities. Any action taken during these exempt activities must be reported at the next county drainage board meeting. However, in no case may a county drainage board take an action which will increase an assessment against any property during one of these exempt activities.

HEARINGS AND HEARING PROCEDURES

Hearings

A hearing is a formal information-gathering and decision-making meeting required to be held, under the statute or the rule, before the county drainage board may issue an order on a particular matter.

Activities Requiring a Hearing

The county drainage board must hold a hearing:

- to obtain opinions on the proposed organization of a new district (s. 88.70(2), Wis. Stats.);
- to review the county drainage board's report on the laying out of district drains, assessment of benefits, and assessment of costs in a newly organized district (s. 88.36(1), Wis. Stats.);
- to allow public comment on proposed construction projects (s. ATCP 48.36(2), Wis. Admin. Code);
- to review the county drainage board's report on enlarging or supplementing existing district drains, or constructing additional district drains in an existing district (s. 88.71, Wis. Stats.);
- to borrow amounts greater than $8,000 if the loan extends beyond one year (s. 88.54(4), Wis. Stats.);
- to levy cost assessments against district landowners (s. ATCP 48.02(1), Wis. Stats.);
- to levy cost assessments against a municipality for enlarging or maintaining a district drain (s. 88.64(4), Wis. Stats.);
- upon petition of any person, to review any county drainage board order on assessment of benefits or costs (s. 88.44(1), Wis. Stats.);
- to remove dams or other obstructions from a drainage outlet (s. 88.72(2), Wis. Stats.);

Activities Requiring a Hearing (cont.)

- to reassess benefits in a district (s. 88.46(2), Wis. Stats.);
- to form a sub district for more thorough drainage (s. 88.70(2), Wis. Stats.);
- to determine how to provide drainage to lands assessed but not adequately drained (s. 88.73(2), Wis. Stats.);
- to annex lands to a district, or to consolidate two districts (s. 88.77(3), 88.78(2), 88.79(3), and 88.791(3), Wis. Stats.);
- to withdraw lands from a district, or to suspend operations in a district (s. 88.80(3) and 88.81(1)(c), Wis. Stats.);
- to transfer jurisdiction of a district to a city, village, or town (s. 88.83(2), Wis. Stats.); or
- to dissolve a district (s. 88.82(1)(d), Wis. Stats.).

A county drainage board may also hold a hearing for:

- resolving controversies between 2 or more districts (s. 88.14(1), Wis. Stats.); or
- resolving controversies between landowners within the district.

Eligible Petitioners

The following numbers of individuals are required in order to successfully petition the county drainage board to hold a hearing on a particular matter:

- At least 10% of the owners of land in the district, or the owners of at least 10% of the lands in the district:
  - to hold a district meeting (s. 88.215, Wis. Stats.).
  - to reassess benefits in a district (s. 88.46(1), Wis. Stats.).
- The owners of at least 10% of the lands in a district:
  - to enlarge existing district drains or to construct new supplemental district drains (s. 88.71(1), Wis. Stats.).
  - to remove dams or other obstructions from drainage outlets (s. 88.72(1), Wis. Stats.).
  - to consolidate with another district (s. 88.79(2) and 88.791(2), Wis. Stats.).
- The owners of at least 1/2 of the lands, or at least 1/2 of the owners of lands representing at least 1/3 of the lands, proposing to be annexed in to the district (s. 88.77(1), Wis. Stats.).

Eligible Petitioners (cont.)

- The owners of at least 1/2 of the lands in the part of the district that wishes to create a subdistrict for more thorough or different drainage (s. 88.70(1), Wis. Stats.).
- Any interested person:
  - for review of the validity of a county drainage board order regarding assessing benefits or costs (s. 88.44(2), Wis. Stats.), correcting omitted assessments (s. 88.45, Wis. Stats.), reassessing benefits (s. 88.46, Wis. Stats.), or apportioning benefits upon division of a parcel (s. 88.44, Wis. Stats.).
- Any landowner:
  - to provide drainage for lands assessed but not adequately drained (s. 88.73(1), Wis. Stats.).
  - to annex lands benefited by drainage but not assessed (s. 88.78(2), Wis. Stats.).
  - to withdraw his or her lands from a district (s. 88.80(1), Wis. Stats.).
  - to enlarge the opening in an embankment, bridge, grade, or culvert (s. 88.89(2), Wis. Stats.).
  - to extend time to pay assessments when bonds have been refunded (s. 88.55(2), Wis. Stats.).
- The owners of 67% of the confirmed benefits, excluding benefits received by state-owned lands:
  - to suspend operations in a district (s. 88.81(1)(b), Wis. Stats.), or to dissolve a district (s. 88.82(1)(b), Wis. Stats.).

    Note: 90% is required if the petition is within 2 years of organization of the district (s. 88.81(1)(a), Wis. Stats.).
- Any landowner, except the state:
  - for suspension of operations (s. 88.81(1)(bm), Wis. Stats.) or dissolution if 20 years since the last assessment for costs (s. 88.82(1)(bm), Wis. Stats.).
- Majority of owners of district land within a city, village, or town for transfer of jurisdiction to the city, village, or town (s. 88.83(1), Wis. Stats.).

Note: Regardless of the number of petitioners, the county drainage board may refuse to order a hearing or take any other action on a petition that is basically the same as a petition decided upon by the county drainage board within the previous 3 years (s. 88.065(3), Wis. Stats.).

Open Proceedings and Notice (s. 88.05, Wis. Stats.)

The county drainage board is a quasi-judicial body and is required to make its determinations on the basis of facts, reports, and testimony presented at the hearing. Hearings are open to the public. Before holding a hearing, the county drainage board must schedule a time and place for the hearing and give proper notice of the hearing. (See pages 5-6 through 5-10.)

Note: All interested persons should have at least 20 days to review any documents that will be discussed at the hearing.

Hearing Procedures

The following are suggestions for conducting a county drainage board hearing:

- The county drainage board chair should conduct the hearing.
- The county drainage board chair should specify the rules under which the hearing will be conducted. These may include:
  - testimony time limits.
  - rebuttal time limits.
  - order of testimony.
  - use of written testimony. (See Appendix B.)
- A brief informational summary of the proposed action or petition should also be given by one of the county drainage board members, the county drainage board's consultant, or the person petitioning the county drainage board.
- Any interested person may appear and testify for or against the petition at the hearing.
- Testimony should be uninterrupted. The county drainage board may ask questions for clarification only, upon completion of the testimony.
- Written testimony should be incorporated into the hearing record by either reading it aloud or specifying that it be incorporated into the hearing record by the stenographer.
- The hearing should be recorded and the county drainage board secretary should accurately and completely reflect the presentations and discussions in the county drainage board minutes or in a separate hearing record.

Rulings or Orders

After obtaining all testimony, the county drainage board may decide to either:

- discuss testimony received as part of the hearing, or
- convene a closed session to discuss testimony and consult with legal counsel.

The county drainage board may issue an order or make a ruling, subject to the changes and conditions that the county drainage board considers advisable. If the county drainage board is not satisfied or new evidence was presented during testimony that could change the proposed action, the county drainage board may do any of the following:

- Issue an order or make a ruling dismissing the petition.
- Table the petition and reschedule another hearing to acquire further testimony, information, or evidence. It is often advisable to hold the hearing record open for some appropriate amount of time to allow additional information to be presented to the county drainage board and to resolve any questions that arose at the hearing before the county drainage board makes its final decision.

Appeals of County Drainage Board Rulings or Orders (s. 88.09, Wis. Stats.)

Any person aggrieved by an order or decision of the county drainage board may appeal the decision to the circuit court within 30 days after the publication of the order or decision. The person must ask the circuit court to issue a *writ of certiorari* ordering the county drainage board to send the record of the county drainage board's decision to the circuit court for review. The petition to the circuit court must allege facts showing one of the following:

- The county drainage board acted outside of its authority.
- The county drainage board committed a legal error, including an error in procedure which affected some person’s rights.
- The county drainage board did not base its decision on substantial evidence.

Appeals of County Drainage Board Rulings or Orders (cont.)

Both sides are given an opportunity to argue, usually in the form of legal briefs or arguments. The circuit court's decision may be appealed to higher courts. Because an appeal is a legal proceeding, representation by legal counsel is advised.

NOTICES

Notices

The county drainage board must provide notice of meetings and hearings. There are at least two kinds of notice. Regular notice is provided to a landowner directly by various means. Public notice must be published in the newspaper designated by the county board to provide the official public notice to citizens. The public notice must include time, date, place, and subject matter of the meeting or hearing, including the subject matter of any contemplated closed session. All notices must also indicate where the documents and records to be considered by the county drainage board will be available for inspection by any interested person before the meeting or hearing.

Notice of a Meeting (s. ATCP 48.14(3), Wis. Admin. Code)

A county drainage board is required to hold at least one meeting each year at which it must present the annual inspection report to landowners before it is forwarded to the department and the county zoning administrator. That public meeting requires a class 2 (2 insertions) notice published in the newspaper. (See page 5-10.)

Ordinarily, a general business meeting requires publication of advance notice at least 24 hours prior to the meeting, unless the agenda includes specific actions which require more advance notice by law. (See pages 5-7 through 5-10, and Appendix F, subch. V, ch. 19, Wis. Stats.)

Note: The department strongly recommends that these notices also be mailed to all landowners in the drainage districts, who may be affected by decisions made at the meeting.

Notice of

The county drainage board is required to provide notice before

Inspection

Storm
(s. ATCP 48.12(2), Wis. Admin.. Code)

undertaking either of the following required inspections:

- Site or Major Storm Inspection. Notice is given any time prior to entry by the county drainage board, its employee, or agent. The notice may be given to the landowner in person, by telephone, or by mail. If the landowner is not available, the notice may be posted at a conspicuous location at an entrance to the land.

Annual
(s. ATCP 48.14(2), Wis. Admin. Code)

- Annual Inspection: The board must publish a class 2 notice as an inspection announcement that appears twice in the official county newspaper. The last insertion must be at least one week prior to the inspection. The notice must state that landowners may be present at the inspection of their property, and that they may submit comments on the performance of the drainage system.

Notice of Activities Within the Corridor (s. ATCP 48.24, Wis. Admin. Code)

The county drainage board, its agent, or employee may do any of the following in a district corridor <u>without prior notice</u>:

- Enter, and bring vehicles and equipment for the purpose of inspecting, surveying, maintaining, repairing, restoring, or improving a district drain or corridor.
- Perform any activities related to the maintenance, repair, restoration, or improvement of a district drain or corridor, including cutting, mowing, pesticide application, dredging, excavation, and other related activities.

If cutting trees more than 6 inches in diameter at breast height, or if materials will be excavated or deposited in the corridor, prior notice must be given. Notice may be given any time prior to entry, in person, by telephone, by mail, or by a notice posted in a conspicuous place at an entrance to the land if the landowner is not available.

Notice of Activities Outside the Corridor (s. ATCP 48.22, Wis. Admin. Code)

Before the county drainage board, its agent, or employee may perform any survey, design, construction, maintenance, repair, or restoration operations outside the corridor, the landowner must be notified. Notice may be given any time prior to entry, in person, by telephone, by mail, or by a notice posted in a conspicuous place at an entrance to the land if the landowner is not available.

Notice of Annual Inspection and Annual Report (s. ATCP 48.14, Wis. Admin. Code)

The county drainage board must publish a class 2 notice for the annual inspection. A report on the inspection must then be included in the annual report. Prior to submitting the annual report to the zoning administrator and the department, the county drainage board must present the annual report for each district under its jurisdiction at a public meeting. Notice of that meeting must be mailed to all known landowners in the drainage district and published as a class 2 notice.

Notice of Construction Bid (s. 88.62, Wis. Stats.)

A county drainage board may employ or contract with any qualified person to do work in a drainage district. If the cost of the work will exceed $10,000, the county drainage board must advertise for bids by publishing a class 2 notice and posting any other notices that the county drainage board considers appropriate.

Notice of County Drainage Board Hearing (s. 88.05, Wis. Stats.)

If a county drainage board is required by law to hold a hearing, the county drainage board must mail a notice by ordinary mail, at least 20 days before the hearing, to all landowners whose lands may be affected. The notice must also be published as a class 3 notice in the official county newspaper, with the last publication not more than 20 days prior to the hearing.

The notice must contain all of the following:

- The particular petition or report filed.
- Time and place of hearing.
- Where the documents that will be discussed are located.
- The right for any interested person to inspect the petition or report during the 20 days before the hearing.
- The specific request sought by the petition.
- Statement that all objections to the jurisdiction of the county drainage board, or to the content, legality, or sufficiency of the issues in the

Notice of County Drainage Board Hearing (cont.)

petition or report must be submitted clearly and in detail, in writing, to the county drainage board before the hearing.

Note: The department strongly recommends that the notice include a statement that the hearing record will be held open for some appropriate amount of time to allow additional information to be presented to the county drainage board and to resolve any questions that arise at the hearing before the county drainage board makes its final decision.

The notice must also be mailed at least 20 days prior to the hearing to the following individuals:

- Chair of the county highway committee or the highway commissioner.
- Chair of the county land conservation committee.
- Secretary of the Department of Natural Resources.
- Department of Agriculture, Trade and Consumer Protection.
- Any affected railway company.

Note: Notice must also be mailed to the mortgagees of the affected lands if the hearing involves creation of a district or annexation of lands. See specific requirements in earlier chapters.

If failure to give adequate notice is discovered before the hearing, the hearing must be postponed until adequate notice is given. If the failure is not discovered until after the county drainage board enters an order, the person must show cause to the county drainage board why he or she should not be bound by the order already entered.

Notice of County Drainage Board Orders or Rules (s. 88.21(12), Wis. Stats.)

Rules and orders issued by the county drainage board must be published once in the official county newspaper. Any order or rule that pertains to a specific person or property must also be served on the person or owner of the property in the same way that a summons is served under s. 801.11, Wis. Stats.

Notice of Preparation of Specifications and Compliance Plans (s. ATCP 48.20 and 48.22, Wis. Admin. Code)

Specifications for district drains and facilities must be submitted to the county zoning administrator and the department by December 31, 2000. In addition, compliance plans must be submitted to the same parties by December 31, 2001. Prior to submission, the county drainage board must hold a public meeting to allow landowners an opportunity to review and comment on the submittals. The county drainage board must publish a class 2 notice of the meeting and must notify every known landowner in the district by mail.

Notice Requirements Summary Table

Activity	Type of Notice
Annual inspection	Class 2 Notice[1]
Annual report meeting	Class 2 Notice[1] with mailing[2]
Activities outside corridor	Telephone/Mail/In Person/Posting[4]
Activities within corridor: Depositing/Excavating/Cutting trees >6 in. All other activities	 Telephone/Mail/In Person/Posting[4] No notice required.
Construction costs >$10,000	Class 2 Notice[1]
County drainage board hearing	Class 3 Notice[1] with mailing[3]
County drainage board business meeting	Minimum 24-hour notice[5]
Specifications review meeting: 12/31/00 deadline	Class 2 Notice[1] with mailing[2]
Compliance plan review meeting: 12/31/01 deadline	Class 2 Notice[1] with mailing[2]
County drainage board rules or orders	Class 1 Notice[1]; Served on individuals
Storm inspection (No notice required in district corridors.)	Telephone/Mail/In Person/Posting[4]

[1]See Chapter 985, *Publication of Legal Notices; Public Newspapers; Fees*, Wis. Stats.
Class 1 Notice: Requires one insertion in the official county newspaper.
Class 2 Notice: Requires two insertions in the official county newspaper.
Class 3 Notice: Requires three insertions in the official county newspaper.

[2]Notice of the public meeting must also be mailed to all known landowners in the affected drainage district.

[3]Notice must also be mailed to the county highway committee chairperson or county highway commissioner, county land conservation committee chairperson, DNR secretary, and the department. Generally, notice must also be mailed to all landowners in the district, or all landowners possibly affected by the proposed action. All mortgagees of lands affected must also receive notice if the hearing involves creation of a district or annexation of lands. The county drainage board must allow 20 days to review documents that will be discussed.

[4]Notice may be given any time prior to entry.

[5]Meetings of the county drainage board should generally be planned enough in advance to provide adequate time to publish or post notice reasonably likely to inform interested parties, and provide them an opportunity to review any documents that will be discussed by the county drainage board.

RECORDS MAINTENANCE

Records Custodian (s. 88.19, Wis. Stats.)

The secretary of the county drainage board is the legal custodian of all drainage records. The secretary is to keep records of all drainage proceedings and maintain a book of meeting minutes, and is responsible for responding to all records requests and records distribution requirements. The county zoning administrator is also responsible for preserving certain records and making them available for public inspection.

Records Distribution (s 88.19, Wis. Stats., and s. ATCP 48.48, Wis. Admin. Code)

The secretary of the county drainage board is responsible for distributing the following county drainage board records to the department and the county zoning administrator:

- Any order creating, modifying, suspending, or dissolving a drainage district, including maps or descriptions of district boundaries.
- Any order approving the construction, enlargement, extension, or modification of a district drain, including profiles and cross-sections of the district drains affected.
- Any order confirming or ordering an assessment, supplemental assessment, or reassessment of benefits, damages or costs.

The secretary must send the county treasurer a copy of the following records, upon request:

- Latest confirmed assessment of benefits for each parcel of land.
- Total assessments for costs against each parcel.

Public Access to Records (s. 88.19, Wis. Stats.)

The county zoning office is the primary public access point for the drainage district records. The county zoning administrator is responsible for maintaining all records forwarded by the county drainage board secretary or the department. Some records must be maintained in perpetuity; some records for a minimum of 10 years.

Records Kept in Perpetuity (s. 88.19, Wis. Stats., and s. ATCP 48.46(1), Wis. Admin. Code)

The secretary and the county zoning administrator must keep the following records in perpetuity:

- Every order of the circuit court or the county drainage board creating, modifying, suspending, or dissolving a drainage district.
- Every order of the circuit court or the county drainage board altering the boundaries of a district, or determining ownership of drainage facilities.
- Every order of the circuit court or the county drainage board approving the construction, enlargement, extension, or modification of a district drain and the affected profiles and cross-sections.
- Every order that confirms or orders an assessment, supplemental assessment or reassessment of benefits, damages or costs.

Records Kept for 10 Years (s. 88.19, Wis. Stats., and s. ATCP 48.46(4), Wis. Admin. Code)

The secretary of the county drainage board must keep the following records for at least 10 years:

- Minutes of every meeting of the county drainage board.
- Minutes of every meeting of district landowners held under the auspices of the county drainage board.
- A copy of every inspection report and annual report.

Note: The county zoning administrator must also keep a copy of every annual report for at least 10 years.

Records Kept for Ease of Reference (s. ATCP 48.46(2) and (3), Wis. Admin. Code)

The secretary of the county drainage board and the county zoning administrator must keep the following records available for reference:

- Maps and descriptions that clearly and accurately delineate the boundaries of every drainage district, as most recently confirmed by the circuit court or ordered by the county drainage board.
- Descriptions or drawings that identify location, cross-section, grade or profile, and other design specifications of every district drain, as last constructed or reconstructed with the approval of the circuit court or by order of the county drainage board.

Records Kept until District Dissolution (s. ATCP 48.46, Wis. Admin. Code)	The county drainage board must keep a copy of every request for approval of construction or restoration projects submitted to the department, as well as a copy of every approval or disapproval issued by the department, until the district involved is dissolved.
Records Inspection by the Department (s. 88.19(5), Wis. Stats.; s. ATCP 48.48(3), Wis. Admin. Code)	The department can examine and copy all records pertaining to drainage districts, including those in the possession of the secretary of a county drainage board, county zoning administrator, clerk of courts, or any other person.
Records Destruction (s. 88.19(4)(d), Wis. Stats.)	The state historical society and the department must be given a 60-day written notice before any records are destroyed.

INSPECTION REQUIREMENTS

Annual Inspection (s. ATCP 48.12 and 48.14, Wis. Admin. Code)	The county drainage board, or its consultant, employee, or authorized landowner, must annually inspect every drainage district. All district ditches, corridors, dams, and other drainage facilities within the drainage district must be inspected and any needed repairs or maintenance identified. The county drainage board must notify landowners prior to the inspection. (See pages 5-6 through 5-10.) Any person may accompany the inspector on lands they own or manage. The cost of the inspection is apportioned among the districts and paid out of the funds available for maintenance and repair.

Annual Inspection (cont.)

An inspection must determine:

- whether district drains are being maintained in compliance with the statute and rule;
- whether a district corridor has been established and maintained on every district ditch;
- whether landowners are in compliance with requirements;
- whether, and to what extent, sedimentation has occurred in district drains;
- whether the cross-sections or grade profiles of district drains have changed significantly from the formally established cross-sections and grade profiles; and
- whether any district drains should be restored, altered, or improved by maintenance to ensure proper drainage, to reduce soil erosion or sedimentation, or to comply with the rule provisions.

Annual Report

The annual inspection for a drainage district may be done in stages and combined into one report for the district. A summary of the identified work items in a district and how they will be addressed must be included with the county drainage board's annual report. The annual report must be sent to the zoning administrator and the department by December 1 of each year. Prior to submission, the report must be presented at a public meeting. (See page 5-8.)

Note: The department will make copies of the annual inspection reports available to the Department of Natural Resources.

Major Storm Inspection (s. ATCP 48.16, Wis. Admin. Code)

All district drains and corridors must be inspected within three weeks of a major storm event. “Major” is defined as exceeding a 25-year, 24-hour storm. (See Appendix D.)

Inspection Report

The county drainage board, or its designee, must prepare a report summarizing the damage to the district drains caused by the storm, as well as the county drainage board's plans on how the damage will be repaired. A copy of this storm inspection report must be attached to the annual report.

Landowner Complaints (s. ATCP 48.16, Wis. Admin. Code)

County drainage boards are required to maintain all district drains in compliance with the formally established specifications for the district drains. If the county drainage board receives a complaint about district drain performance, the county drainage board or a person designated by the county drainage board must notify the affected landowners and conduct an inspection of the problem area. The findings must then be reported to the county drainage board at the next county drainage board meeting. (See Appendix B.) The county drainage board decides what action will be taken.

Natural Disasters

The county drainage board may meet with local people and government officials in response to natural disasters that have affected the district drains. If necessary, the county drainage board may hold these meetings without giving public notice. (See page 5-1.) If public notice is not given, however, no action may be taken at the meeting that will result in an increase in the assessment against any property. All information and observations from the meeting must be reported by the county drainage board's secretary at the next regular meeting of the county drainage board for inclusion in the county drainage board's minutes.

REPORTING REQUIREMENTS

Reports Submitted Annually

District Inspection Reports (s. ATCP 48.14(3), Wis. Admin. Code)

The county drainage board or its designee must inspect each drainage district annually. A summary of the inspection must then be included in the annual report for that drainage district presented at the annual public meeting.

Major Storm Inspection Reports (s. ATCP 48.16(2), Wis. Admin. Code)

The county drainage board also has the responsibility to inspect the district drains and corridors after a major storm. Each storm report should describe the damage caused by the storm and the repairs planned. All storm reports must also be included in the annual report. (See page 5-14 and Appendix B.)

Reports

A separate annual report on each drainage district must be filed with the

Submitted Annually (cont.)

Annual Reports (s. 88.24, Wis. Stats.)

county zoning administrator and the department by December 1 of each year for the preceding year ending August 31. (See Appendix B.)

The annual report must be verified under oath by at least one county drainage board member and must include the following information:

- A financial statement for the drainage district.
- A statement of all bonds paid or issued during the preceding year.
- A statement of all work done during the preceding year, specifying where the work was done and its cost.
- A copy of the annual district inspection report (s. ATCP 48.14(3), Wis. Admin. Code).
- A copy of each storm inspection report (s. ATCP 48.16(2), Wis. Admin. Code).

Specifications Due Dec. 31, 2000 (s. ATCP 48.20, Wis. Admin. Code)

Every county drainage board was to file specifications for each drainage district under the county drainage board's jurisdiction with the county zoning administrator and the department by December 31, 2000. The department must approve the specifications before the county drainage board can adopt them as the formally established specifications for the drainage district.

Content

The specifications must include the following:

- A map showing the boundaries of the district as last confirmed by the circuit court or by order of the county drainage board. If the boundary of a drainage district is not clearly documented, the county drainage board should clarify the boundary by officially annexing or withdrawing parcels of land in to or out of the known limits of the drainage district (see s. 88.77 to 88.80, Wis. Stats.).
- A legal description of the land parcels included in the drainage district (*i.e.*, the NW¼ SE¼, Section 14, T11N, R22E).
- A map showing the intended alignment and extent of every district drain. The map must clearly show which drains are district drains, and which are private drains.

Specifications Due Dec. 31, 2000 (cont.)

- A map showing the intended location and width of the district corridors. This may also be achieved by including a note on the map that describes the locations of the corridors along the district ditches.

The intended cross-section of every district drain. Cross-sections of district ditches should include the following information:

the intended top and bottom width of the district ditch

the intended depth of the ditch

the intended side slope of the ditch

any drainage structures, such as dams or culverts, in the cross-section

Note: The department recommends that cross-sections be shown every 1/3 mile along the entire length of the district ditch, and at points where structures or changes in drain slope occur.

The intended grade profile of every district drain. The grade profile of district ditches should include the following information:

the intended elevation of the top and bottom of the district ditch

the estimated water surface elevations in the ditch at base flow

the peak water surface elevations in the district ditch resulting from a 10-year, 24-hour storm event.

Note: The base flow and 10-year, 24-hour storm event water elevations should be determined using methods approved by the department.

A sample of the specifications required is included in Appendix B.

The formally established grade profile determines the drainage access and the depth of drainage provided to landowners. County drainage boards may also wish to document the elevations of known points at which private drains empty into district drains. This information is useful when disputes arise concerning the adequacy of drainage.

Establishing Cross-Sections, Grade Profiles, and Alignments

A county drainage board must start with the cross-sections, grade profiles and alignments last confirmed by a circuit court as the formally established cross-section, grade profile, and alignment of all district drains. If a county drainage board can not locate the cross-sections, grade profiles, and alignments ordered by the circuit court, the county drainage board can reconstruct this information based on physical evidence of historical conditions in the drainage district.

Specifications Due Dec. 31, 2000 (cont.)

Note: For example, a county drainage board may be able to document a historical grade profile by physical evidence including soil conditions and invert elevations of historical structures along the alignment of the district drain.

Note: The maps and description must be based on the circuit court orders that created or modified the district or any county drainage board order annexing or removing land. Since many districts were created over 50 years ago, it is possible that maps and descriptions prepared for the circuit court can no longer be located. The county drainage board may clarify boundaries or status if circuit court orders are not clear or copies cannot be found. With the help of a professional engineer, the county drainage board should prepare the missing documents. Before submitting them to the department, the county drainage board must hold public hearings to annex lands or withdraw lands as needed, or to clarify which drains are district drains and which are private drains.

If a county drainage board approved a change in the cross-section, grade profile, or alignment of a district drain prior to September 1, 1999, the change may be considered a legal change in the cross-section, grade profile, or alignment if all of the following occurred:

- The county drainage board acted within its statutory authority when approving the change.
- All objections by landowners affected by the change were resolved. A landowner is considered affected by a change if the change impedes gravity flow of water from the landowner's land, through a real or assumed drain, to any real or assumed outlet at the formally established cross-section and grade profile of the district drain.

If an objection by an affected landowner was not resolved when the county drainage board approved the change, the change may not be incorporated into the specifications submitted to the department for the drainage district. A county drainage board may try to legally incorporate the change into the specifications.

Hearing

Before submitting the specifications to the department for approval, the county drainage board must hold a hearing on the specifications. The county drainage board must publish a class 2 notice and provide written notice to each landowner in the district (see page 5-11, **notice summary table**). The notices should include information on where the specifications can be reviewed before the meeting. The county drainage board must

Specifications Due Dec. 31, 2000 (cont.)

complete the notices at least 20 days prior to the scheduled hearing, and must allow 30 days after the hearing for landowners to file written objections with the county drainage board.

The county drainage board must consider each landowner objection filed with the county drainage board. The county drainage board should resolve those that are within its powers, and that will not compromise the intent of the specifications or of the drainage provided to the landowners.

Submittal to the Department

Once the steps listed above have been completed, the county drainage board can submit the specifications to the department for approval. The county drainage board should submit all of the following information to the department:

- The drainage district specifications that the county drainage board wants approved.
- A description of how the county drainage board established the specifications. This may include information such as how the boundaries of the drainage district were determined, or a description of how the cross-sections and grade profiles were established.
- Documentation to show that the county drainage board has complied with all of the steps to be completed prior to submitting the specifications to the department. This may include copies of the hearing notices and minutes from the hearing.
- A copy of every landowner objection filed with the county drainage board regarding the proposed specifications.
- The county drainage board's position on every unresolved landowner objection.
- Other relevant information required by the department.

Department Review

Within 90 days after a county drainage board files all of the information required above, the department will approve or disapprove the proposed specifications. The department may extend the approval deadline.

Note: The department will consult with the DNR before approving proposed drainage district specifications. Among other things, the department will ask the DNR to identify which, if any, district drains have navigable stream histories or are classified as class 1 trout streams.

Specifications

Once the department has approved the specifications for a drainage district,

Due Dec. 31, 2000 (cont.)

Adoption of Specifications

the county drainage board may adopt them as the formally established specifications for the drainage district. The county drainage board can officially adopt the specifications at a drainage district meeting. Within 30 days after the adoption of the specifications, the county drainage board must file the specifications with the department, the county zoning administrator, and the county register of deeds. Specifications are not formally established until they are approved, adopted, and filed.

Note: A landowner can challenge the formally established specifications if they believe the specifications violate ch. 88, Wis. Stats., or ch. ATCP 48, Wis. Admin. Code, even if the department has approved the specifications. (In some cases, the department may not be aware of a violation when it approves the specifications.)

Compliance Plan due December 31, 2001 (s. ATCP 48.22, Wis. Admin. Code)

Every county drainage board must file a plan with the department showing how the county drainage board intends to bring all district drains and corridors into compliance with the formally established specifications. A separate plan must be submitted for each drainage district under the county drainage board's jurisdiction. The plans were due to be filed before December 31, 2001. The proposed schedule must show the district facilities brought into compliance by December 31, 2004.

Contents

The plan must include the following information:

A professionally drawn map of the drainage district. The map must show all district drains, and must clearly identify relevant features such as the location of private drain connections to district drains, the location of dams, and the location of existing spoil piles.

A restoration plan that indicates the following:

Which drains or portions of drains need maintenance or repair to conform them to the formally established cross-section, grade profile, and alignment.

A schedule listing the maintenance and repair activities needed to bring the district drains into compliance with the formally established specifications, and the date each activity is expected to be completed.

An estimate of how much material will be removed from each district drain that needs maintenance.

Compliance Plan due

- The locations where spoil material is expected to be placed during maintenance activities.

December 31, 2001 (cont.)

An estimate of the costs for bringing the district drains into compliance with the formally established specifications, and a plan for how the drainage district will pay for these costs.

A repair and maintenance plan that includes the following:

A list of the routine maintenance activities that will be performed on district drains, dams, and other related structures to keep them in compliance with the formally established specifications, and the expected frequency that each activity will be performed.

A list of the routine maintenance activities that will be performed on district corridors to keep them in compliance with the statute and rule, and the frequency that each activity will be performed.

A list of any special repair and maintenance projects, and the date each project is expected to be completed.

The estimated costs for the routine repair and maintenance of the district drains, corridors, and other related structures (this is for routine maintenance and repair only; it should not include the costs to initially bring the district drains, corridors and other related structures into compliance).

- A plan describing how soil erosion and runoff will be controlled during maintenance and repair activities, and an associated cost estimate.

Hearing

Before submitting the compliance plan to the department, the county drainage board must hold a hearing with the drainage district landowners. The county drainage board must publish a class 2 notice and provide written notice to each landowner in the district (see page 5-11, **notice summary table**). The notices should include information on where the compliance plan can be reviewed before the meeting. The county drainage board must complete the notices at least 20 days prior to the scheduled hearing, and must allow 30 days after the hearing for landowners to file written objections with the county drainage board.

Compliance Plan due December 31, 2001 (cont.)

Submittal to the Department

When submitting the compliance plans to the department, county drainage boards should also submit the following information:

- Documentation to show that the county drainage board has followed the proper steps for holding a hearing on the compliance plan (see required steps listed above).
- Copies of written landowner objections that remain unresolved, and the county drainage board's position on the unresolved objections.

Chapter 6

Maintaining and Improving Drainage District Facilities

ASSESSMENT PROCEDURES

Assessments

When lands are improved by drainage, the improvement benefits landowners in the district, and costs money. In any district, several different drainage system designs could be developed, but, ultimately, only one design is selected. The design does not benefit all landowners or lands in the same way. In fact, some lands may actually be damaged by the design selected. The county drainage board, with the help of a qualified drainage engineer, must determine who should pay how much to construct, maintain, and operate the chosen design. Under the law, this determination is based on the relative benefit or damage received by a particular parcel of land.

Note: There are actually two kinds of assessments made by the county drainage board. First, the county drainage board assesses the value of the benefit from drainage received by a parcel of land, and then, based on the costs of projects and operating expenses, the county drainage board assesses costs to the parcel in proportion to its benefits.

Assessment or Reassessment of Benefits

An assessment or reassessment of benefits is the basis for any subsequent allocation of expenses by the county drainage board. It allows the county drainage board to assess any costs on a proportionate basis. An assessment or reassessment of benefits is necessary when any of the following occur:

- A new drainage district is organized. The county drainage board will both assess benefits and award damages to lands, as it lays out the district drains and prepares for construction of the new drainage district (s. 88.35, Wis. Stats.).
- The county drainage board receives a petition for reassessment signed by at least 1/10 of the owners of land in the district, or by owners of at least 1/10 of the land within the district. This procedure is available only if at least five years have passed since the last order assessing benefits (s. 88.46(1), Wis. Stats.).

Assessment or Reassessment of Benefits (cont.)

- A tract of land is divided into smaller parcels. Since the division of land usually results in the sale of one or more of the parcels, a reapportionment of the benefits assessment is needed (s. 88.47, Wis. Stats.).
- A county drainage board determines that the last confirmed benefits assessment for a drainage district no longer reflects the actual current benefits to the lands in the district (s. ATCP 48.06(2), Wis. Admin. Code).

Determining Benefits or Damages

A county drainage board must assess benefits to agricultural lands or nonagricultural lands according to the list of criteria established in the law. (See page 6-3.)

Note: Contact the department for a recent example of methods of assessment.

Agricultural Lands (s. ATCP 48.08, Wis. Admin. Code)

A county drainage board must use <u>all</u> of the following criteria to assess benefits to agricultural lands in the district:

- Estimated increase in land value resulting from the drainage. The county drainage board may consider the value of the potential uses of the land, not simply the actual land use on the parcel. Any use limitations recorded at the register of deeds office should be considered in this analysis.
- The type, depth, quality, and character of the surface soils and subsoils, and the depth of the water table on that land.

Note: Soils with high water tables normally receive the greatest benefit from drainage.

- The amount of drainage required or provided to the parcel.
- The thoroughness and reliability of the drainage provided.
- The amount and frequency of flooding of the parcel.
- The difficulty of draining the land.
- Any loss of acreage resulting from the construction of district drains or corridors, or from the placement of excavated materials related to the construction or maintenance of district drains and corridors.
- Other factors which the county drainage board considers relevant.

Note: Information may be obtained from a variety of sources including soil surveys, aerial photographs, topographic maps, cropping histories, wetland maps, maps of original benefited acres, interviews with landowners, and on-site investigations.

Determining Benefits or Damages (cont.)

When estimating land values, a county drainage board may consider the following categories:

- Residential uses
- Commercial uses
- Cropland, including dryland cropland, pasture, irrigated cropland, or cranberry cropland
- Abandoned cropland, including former agricultural land not currently used for agricultural, residential, or commercial purposes
- Woodland, including managed and unmanaged woodlands
- Wetlands, including soils with standing water that have no significant agricultural value
- Other categories that the county drainage board considers appropriate

When estimating land values associated with a potential use, a county drainage board may assume that the drained lands have access to a district drain and that no changes would be required to the formally established grade profile and cross-section of the district drain to accommodate drainage. The county drainage board may also assume that the necessary on-site drainage systems are installed on the parcel to permit the potential use.

A county drainage board can not include the following acreage in any assessment of benefits:

- Acreage in a district corridor, unless the county drainage board authorizes the landowner to engage in row cropping in the district corridor. (See pages ____.)
- Acreage permanently lost to the landowner because of the construction, restoration, or maintenance of district drains or corridors, or because of the placement of materials excavated in connection with that construction, restoration, or maintenance.

Nonagricultural Lands (s. ATCP 48.10, Wis. Admin. Code)

In assessing nonagricultural lands, a county drainage board may consider all of the criteria used for agricultural land assessment, as well as the extent and frequency of discharges onto agricultural lands and into district drains from the nonagricultural lands, including discharges of stormwater, wastewater, and precipitation runoff from impermeable surfaces.

Determining Benefits or Damages (cont.)

Basis of Assessment

The county drainage board must assess benefits as follows:

- Agricultural lands must be assessed on the basis of 40-acre parcels (s. ATCP 48.08(2), Wis. Admin. Code).
- Nonagricultural lands may be assessed on a flat amount per lot, per acre, or per building or residence, as determined appropriate by the county drainage board (s. ATCP 48.10(2), Wis. Admin. Code).

Wetlands Excluded (s. ATCP 48.06, Wis. Admin. Code)

A county drainage board may not assess benefits to wetlands that are legally protected against drainage. In order to be excluded, the wetland must be all of the following:

- Located outside the district corridor.
- Clearly described in terms of size and location by a survey or map.
- Formally protected by at least one of the following:
  - A deed restriction.
  - Enrollment in a federal, state, or county program that clearly protects the wetland from drainage for at least 10 years.
  - A recorded easement with a minimum term of at least 10 years.
  - A master plan, approved by the Wisconsin Board of Natural Resources, for land owned by the DNR.

Alternative Method of Assessing Benefits (s. ATCP 48.06(3), Wis. Admin. Code)

Owners of at least 2/3 of the assessed lands in a district may adopt some other equitable way of assessing benefits. The landowners' approval must be confirmed in a written agreement signed by the approving landowners.

Confirming Benefits (s. 88.35 and 88.36, Wis. Stats.)

After determining benefits and damages, the county drainage board must prepare a written report, setting forth a detailed description of the benefits and damages assessed to each parcel. Although the report generally also contains the assessment of costs for a proposed project, or for normal operating expenses, the report can be simply a reassessment of benefits which is to be used in the future when funds must be raised.

Confirming Benefits (cont.)

The county drainage board must hold a public hearing on the report. After holding a public hearing, the county drainage board must issue an order making a determination on the assessment or reassessment of benefits. This order confirms the benefits.

Assessing Costs

To Lands Within the District (s. ATCP 48.02, Wis. Admin. Code)

Once benefits are confirmed, the county drainage board may assess costs to pay for proposed projects and expenses of a drainage district. The costs are distributed among all of the parcels of land in a drainage district in proportion to the last confirmed assessment of benefits for each parcel. A county drainage board may allow a reasonable credit to a landowner who provides maintenance or other "in kind" payments to the drainage district.

Note: The drainage board should set up equitable predetermined rates for the value of the "in kind" work.

A county drainage board may issue an assessment for various kinds of costs, including, but not limited to:

- construction or maintenance costs,
- restoration costs,
- legal fees,
- loan or bond repayment,
- county drainage board operating expenses, and
- consultant fees or employee salaries.

The county drainage board must hold a public hearing on the cost assessments prior to issuing the order. Often, the hearings for assessing benefits and assessing costs are combined. (See page 5-2.)

At the time of constructing the district facilities, costs may not exceed 75% of confirmed benefits. Over time, the total cost assessments on a parcel for all construction activities may not exceed the confirmed benefits. The county drainage board may, however, exceed the confirmed assessment of benefits for maintenance, restoration, and operating expenses.

Assessing Costs (cont.)

To An Individual (s. ATCP 48.02, Wis. Admin. Code)

Most or all of the construction costs may be assessed directly to an individual landowner if the costs incurred by the county drainage board were a direct result of any of the following:

- A request by the landowner for drainage improvements that solely benefit the landowner. If more than one landowner is benefited, the county drainage board may assess all benefited landowners.
- A land use change or other action by the landowner that altered the flow of water into or from a district drain, or that increased soil erosion or the movement of sediment into a district drain.
- Failure of a landowner to maintain a private drain, resulting in damage to the district drain.
- Failure of a landowner to use erosion control practices required by the county drainage board, resulting in damage to the district drain.
- Extension of a private drain from assessed land to land outside the district.

To Lands Outside the District (s. ATCP 48.04, Wis. Admin. Code)

A county drainage board may not levy a cost assessment against lands located outside the drainage districts except in specific situations.

Note: A county drainage board may levy an assessment for costs on behalf of one district against another district which receives benefit or causes damage. The county drainage board may also assess costs against a municipality benefiting from, or damaging, a drainage district system.

A county drainage board may proceed with one or more of the following options when lands outside a district are receiving a benefit from the operation of the drainage district:

- Annex the benefited lands into the drainage district.
- Refuse to permit the connection of a private drain to a district drain.
- Order the removal or modification of the private drain (s. ATCP 48.30(5)(b), Wis. Admin. Code).
- Sue to recover damages that resulted from actions or omissions taken by the owner of lands located outside the district.
- Enter into an agreement with the landowner for costs incurred by the drainage district resulting from the private drain connection with the district drain. The county drainage board may also assess a reasonable share of the costs of constructing the existing district drain (s. 88.405, Wis. Stats.).

Assessing Costs (cont.)

Municipalities within a District (s. 88.48, Wis. Stats., and s. 48.02, Wis. Admin. Code)

Lands owned by a county, town, village, or city within a drainage district may be assessed benefits, awarded damages, and assessed for costs the same as other lands within the drainage district.

Municipalities Upstream of a District (s. 88.64, Wis. Stats.)

A county drainage board may also assess costs to a city, town, or village upstream from any district drain, whether the municipality is located within or outside the drainage district boundaries. The county drainage board may also assess costs for projects to enlarge the district ditches or add drainage facilities, or for the increased maintenance costs of the drainage system resulting from the increased water flow from any lands within the upstream municipality.

When assessing costs to municipalities, the county drainage board must take the following steps:

- Hire a professional engineer to prepare a report which determines the proportion of flow attributable to lands within the municipality.
- Hold a public hearing on the report, and modify it as needed.
- Issue an order of assessment against the municipality(s) based on the final report.

If the municipality disagrees with the county drainage board's order, the municipality may initiate a state-level review:

- The municipality has 120 days from the date the order is issued by the county drainage board to request that the department review the report.
- The department then has 120 days to review and report back to the county drainage board and the municipality with any recommendations or changes.
- The county drainage board must then promptly issue an order to affirm, modify, or reverse the previous order based on the recommendations.

Note: The municipality may also appeal the county drainage board's order to the circuit court.

Assessing Costs (cont.)

State Lands (s. 88.50(1), Wis. Stats.; s. ATCP 48.02(5), Wis. Admin. Code)

Agricultural lands owned by the state are also subject to assessment. State-owned lands that are not in agricultural use are not subject to assessment. Agricultural use is broadly defined and includes forest and game management activity defined (see s. 91.01(1), Wis. Stats.).

Note: wetlands meeting specific conditions are excluded from assessment. (See page 6-3.)

The county drainage board must receive approval from the specific state agency before constructing any district drain on state-owned or state-managed lands. The agency is required to grant the approval, unless it finds after public hearing that the proposed district drain will injure the purposes for which the agency acquired the property.

Recording Assessments (s. 88.40, Wis. Stats., and s. ATCP 48.40, Wis. Admin. Code)

The county drainage board must record the order for cost assessments with the Register of Deeds office in each county where assessed lands are located.

The assessments and any interest on the assessments are recorded as a first lien on the land. This means the drainage assessments take priority over all other liens or mortgages, except liens for general taxes. The county drainage board may order that the assessments be paid at once, or in installments according to the law. Assessments are paid to the county treasurer. The county drainage board must file a satisfaction of lien when the assessment is paid in full.

Borrowing Based on Assessments (s. 88.54, Wis. Stats.)

The county drainage board may borrow money and issue bonds or notes based on any assessments it levies. If the amount does not exceed $8,000 and does not extend beyond one year, the county drainage board may borrow the money without holding a hearing. (See page 5-10 for notice requirements.)

Contesting Assessments (s. 88.44(1), Wis. Stats.)

A county drainage board order regarding a drainage assessment can be challenged if an individual considers the assessment wrong or unfair. A failure to assess benefits or costs, or to award damages to any lands, does not make the assessment on the remaining lands void.

Contesting Assessments (cont.)

An interested person may petition the county drainage board to review any of the following:

- An order assessing benefits or costs.
- An order correcting omitted assessments.
- An order reassessing benefits.
- An order apportioning benefits upon division of a parcel.

The county drainage board must hold a hearing on the petition. Objections must be submitted in writing to the county drainage board, on or before the day of the hearing. The county drainage board's decision may be appealed to the circuit court.

Recovering Unpaid Assessments (s. 88.42 and 88.43, Wis. Stats.)

The secretary of the county drainage board must keep a separate record of all assessments in each drainage district. On or before December 1 of each year, the secretary certifies all past due assessments, including interest, to the clerk of the town, village, or city where the land is located. The clerk inserts the assessment in the tax roll, and such amounts are collected in the same way as general taxes. The clerk forwards any payments to the county treasurer. The payments are credited to the appropriate drainage district account.

If the amounts certified are not collected, the county treasurer proceeds to collect the unpaid drainage assessments in the same manner as delinquent taxes.

CHANGING FORMALLY ESTABLISHED SPECIFICATIONS

Requirements

County drainage boards can only change the formally established specifications for a district by following the appropriate procedures outlined below. Formally established specifications are those established by circuit court order, or by a county drainage board order under s. ATCP 48.20, Wis. Admin. Code, or by the requirements outlined in this section. Changes in the district boundary, drain specifications and designation, or structures made without following the required procedures are not legal changes. Changes to the district drains and structures within the drain require department approval.

Requirements (cont.)

Changing Drainage District Boundaries (s. ATCP 48.21(1), Wis. Admin. Code)

A county drainage board can only change the drainage district boundary by following the proper procedures to do any of the following:

- Annex land into the drainage district (see pages 4-6).
- Consolidate drainage districts (see pages 4-8).
- Withdraw land from the drainage district (see pages 4-8).

If a county drainage board changes a drainage district boundary by one of the procedures above, the county drainage board must file a record clearly noting the change with the department, the county zoning administrator, and the county register of deeds. The record must include the following:

- A revised map of the drainage district, showing the new boundary.
- Documentation that the county drainage board followed the required procedures for making the change.

Designating a Private Drain as a District Drain (s. ATCP 48.21(2), Wis. Admin. Code)

A county drainage can not classify a private drain as a district drain unless the county drainage board does <u>at least one</u> of the following:

- Obtains the written consent of every landowner who owns or holds an easement to land on which the drain is located.
- Purchases or condemns all of the land required for that district drain and district corridor. (See ch. 88.21(6), Wis. Stats., and ch. 32, Wis. Stats., for the purchase of condemnation land requirements.)
- Properly designates the drain as a district drain under s. 88.73 or 88.77 to 88.80, Wis. Stats. (See page 4-1)

When a county drainage board classifies a private drain as a district drain, the county drainage board must file a record of the classification with the department, the county zoning administrator, and the county register of deeds. The record must include the following information:

- A revised map of the drainage district, showing the designated district drain and corridor.
- Documentation that the county drainage board followed the requirements for designating a private drain as a district drain.

Note: A drain is not necessarily a "district drain" just because it is located on land within a drainage district, or just because it provides drainage for more than one landowner. In some cases, lands within a drainage district are drained by private drains that empty into district drains. Private drains are not operated or maintained by the county drainage board; nor are private drains required to have the 20-foot corridor.

Requirements (cont.)

Changing Cross-sections (s. ATCP 48.24(3), Wis. Admin. Code)

Changes to the formally established cross-sections for district drains are considered construction projects, whether or not they involve actual physical changes to the district drain. To change the formally established cross-section for a district drain, the county drainage board must receive the department's approval under s. ATCP 48.34, Wis. Admin. Code.

If a county drainage board receives the department's approval to change the formally established cross-section of a district drain, the county drainage board must file a clear record and description of the change with the department, the county zoning administrator, and the county register of deeds.

Changing Alignments (s. ATCP 48.24(4), Wis. Admin. Code)

Changes to the formally established alignment are considered construction projects. A county drainage board can not change the formally established alignment of a district drain unless it does all of the following:

- Obtains the written consent of each landowner that will be newly included in the district corridor due to the change in alignment of the district drain. If the county drainage board cannot get the written consent of each landowner in the corridor, a county drainage board can condemn the newly included land in accordance with the requirements of s. 88.21(6), Wis. Stats., and ch. 32, Wis. Stats. This requirement does not apply if the change in alignment will not require additional lands to be included in the district corridor, or if the district drain being realigned is not a ditch (only district ditches require a corridor).
- Obtains the department's approval under s. ATCP 48.34, Wis. Admin. Code.

If a county drainage board changes the formally established alignment of a district drain, the county drainage board must file a record of the change with the department, the county zoning administrator, and the county register of deeds. The record must clearly describe the change, and must include a new map of the drainage district if the realignment is not adequately shown on a map previously filed with the department.

Requirements (cont.)

Changes to the formally established grade profile are considered construction projects. To change the formally established grade profile of a

Changing Grade Profiles (s, ATCP 48.24(5), Wis. Admin. Code)

district drain, a county drainage board must do all of the following:

- Provide a written notice clearly describing the change to each landowner whose access to drainage will be affected by the proposed change, and allow 30 days to object. A landowner is considered to be affected by the proposed change if the gravity flow of water is impeded from his or her land, through a real or assumed drain, to any real or assumed outlet at the formally established cross-section and grade profile of the district drain.
- Resolve, to the satisfaction of the objecting landowner, every timely objection filed by a landowner whose access to drainage is affected by the proposed change.
- Obtain the department's approval under s. ATCP 48.34, Wis. Admin. Code.

Note: The department can not approve a proposed change to the grade profile if an objection by an affected landowner has not been resolved.

If the department approves a county drainage board's request to change the formally established grade profile, the county drainage board must file a record clearly describing the change with the department, the county zoning administrator, and the county register of deeds.

Note: The county drainage board must consider how a change to one feature of the grade profile may affect others. For example, a change in the width of ditch may also affect the water levels shown for the base flow and the 10-year, 24-hour storm event peak flow.

MAINTENANCE AND REPAIR REQUIREMENTS

District Drains to Conform to Specifications (s. ATCP 48.26(3), Wis. Admin. Code)

County drainage boards are responsible for restoring, repairing, maintaining, and, if necessary, modifying district drains so that they conform to the formally established specifications. All district drains must be in compliance with the formally established specifications by December 31, 2004. (See page 5-21)

District Drains to Conform to

"Maintenance and repair" means the restoration of a district drain to the formally established grade profile, cross-section, and alignment

Specifications (cont.)

(see page 2-3). Therefore, maintenance and repair may entail substantial, and expensive, activities, as well as routine activities such as leveling spoil banks, removing obstructions, and controlling vegetation and runoff.

Maintenance and repair does not include material alteration, enlargement, or extension of the drainage system; these activities are considered construction projects. (See page 6-12.)

Maintenance and repair is a restoration project if it includes dredging or other operations that will restore the cross-section, grade, profile, or alignment to the formally established conditions.

Notice to the Department (s. ATCP 48.34, Wis. Admin. Code)

Maintenance and repair projects are not required to be approved by the department. The county drainage board must, however, notify the department prior to beginning restoration projects that will involve the dredging or excavation of more than 3,000 cubic yards of material.
Note: County drainage boards may be required to obtain a DNR ch. 30 or 31 permit prior to beginning any restoration work. County drainage boards should contact the DNR during the restoration project planning stages to determine if a ch. 30 permit will be needed.

Landowner Petitions (s. ATCP 48.45, Wis. Admin. Code)

A landowner may petition the county drainage board to restore, repair, maintain, or modify a district drain in order to conform to the formally established cross-section, grade profile, or alignment for that district drain. In addition a landowner may petition the county drainage board to remove an obstruction that was placed in a district drain in violation of the rule (see page 4-2). The petition must identify the reason for the petition and the action that the landowner requests of the county drainage board. County drainage boards may require the petitioner to provide additional information that is necessary for the county drainage board to properly evaluate the situation.

District Drains to Conform to Specifications

Within 60 days after receiving a petition, the county drainage board must provide a written response to the petitioner. The response must include a description and explanation of what the county drainage board plans to do

(cont.)

in response to the petition. If the county drainage board plans to take no action on the petition, the county drainage board must include an explanation.

After receiving the county drainage board's response to the petition, the petitioner may file a written petition with the department if the petitioner believes that the county drainage board is violating the rule or statutes. The department may investigate the allegations. If the department determines that the county drainage board has violated the rule or statutes, the department can issue an order directing the county drainage board to correct the violation (s. ATCP 48.52, Wis. Admin. Code).

A landowner also has the right to go to the circuit court to initiate an action against a county drainage board that the landowner believes has violated the rule or statutes. Landowners are not required to seek the department's assistance prior to taking the case to circuit court.
A landowner may skip the step of going to the department and go right to a circuit court if the landowner believes that the county drainage board has violated the rule or statute.

Funding for Maintenance and Repair Projects (s. 88.63(2) and 88.54(4), Wis. Stats.)

The county drainage board is required to establish a fund for each district for the costs of maintenance and repair work, as well as county drainage board expenses, per diems, and legal fees. The county drainage board must levy additional assessments if the fund falls below 5% of the amount of the confirmed benefits in the district. (Bills have been introduced make a change to this statute requirement but they have not passed.)
Note: These assessments may exceed the confirmed benefits in the district.

If a county drainage board finds that a district does not have sufficient funds to pay for needed maintenance and repair, or if an emergency arises, the county drainage board may borrow the necessary funds. If the amount does not exceed $8,000 and the loan does not run beyond one year, the county drainage board may borrow the money without holding a hearing.

District Corridors (s. ATCP 48.24,

The county drainage board must establish and maintain a district corridor along both sides of every district ditch. The corridor must extend a minimum of 20 feet from the top of the district ditch bank, although the

Wis. Admin. Code)

county drainage board may establish a wider or narrower corridor for vehicle access or water quality purposes. The county drainage board must identify the location of the corridors on the maps and descriptions filed with the county zoning administrator and the department (s. 48.20, Wis. Admin. Code).

Note: The maps and drainage district descriptions must have been filed by December 31, 1995, unless the county drainage board has received a variance from the department. (See page 5-15.)

Row Cropping in District Corridors

No person may row crop within the district corridor unless they have written permission from the county drainage board. If the county drainage board receives a request from a landowner to allow row cropping within the district corridor, the county drainage board must consider whether or not the row cropping will increase maintenance requirements, soil erosion, or the movement of suspended solids to district drains. Even if the county drainage board has approved row cropping in the district corridor, the county drainage board is not responsible for any damages to crops or obstructions that are caused by county drainage board activities authorized under the rule or statutes.

Buildings or Fixtures in District Corridors

No person may place any building or other obstruction that interferes with the county drainage board's ability to inspect, restore and maintain the district drains and corridors. A landowner who has a building or fixture in a district corridor prior to September 1, 1999, is not required to remove the building or fixture. The owner of the building or fixture, however, waives any claim for damages to that building or fixture that may be caused by county drainage board activities authorized under the statutes or rule.

Trees in District Corridors

The county drainage board can decide to leave trees in the corridor for specific purposes. (See exception under "Woody Vegetation Control," next page.)

Exception

Exception: If woody vegetation growth does not interfere with access to the district drains, a county drainage board may allow woody vegetation to grow along portions of the district ditch corridor, but not in the district

ditch. County drainage boards must be able to have the ability to maintain and repair district drains with the woody vegetation in place. Any area left in woody growth must be maintained under a resource conservation plan with the USDA Natural Resources Conservation Service (NRCS), or the county land conservation department (LCD).

Note: In some situations, local shoreland or wetland zoning ordinances may limit the ability to cut woody vegetation along ditches considered to be natural navigable streams.

Damages to Lands (s. 88.69, Wis. Stats.)

A drainage district is responsible for any damages that result to lands outside the district boundaries caused by work done by the district or its agents. District work, including construction activities, could also result in damages downstream, including increased sedimentation. Adjoining districts may recover the costs of carrying off more water, removing sediment, or repairing flood damage from a district located upstream or downstream, which caused the damages.

Obstruction Removal (s. ATCP 48.26(4), Wis. Admin. Code)

The county drainage board is required to remove obstructions in the district ditches, such as sediment dams, windfalls, deadfalls, sand bars, beaver dams, and submerged vegetation, at least once a year, and more often if necessary.

Soil Erosion and Runoff Control (s. ATCP 48.30, Wis. Admin. Code)

The county drainage board must take measures to minimize soil erosion and sediment delivery to the district drains. The county drainage board may install temporary in-channel sediment basins downstream of any construction activity, or require individual landowners to implement measures on private lands to minimize soil erosion and sediment delivery to the district drains. To ensure compliance, the county drainage board may also monitor the suspended solids in the water in the district drains.

Vegetative Cover

The county drainage board is responsible to establish and maintain effective vegetative cover, or other effective erosion control measures, in the district ditches and in the corridors. Plant seed mixtures and application rates must conform to the USDA-NRCS Field Office Technical Guide. The county drainage board must also replant disturbed areas. Various land uses that still provide effective erosion control may be permitted in the corridor, but should be discussed with the county drainage board in advance.

District Ditch Stability (s. ATCP 48.26, Wis. Admin. Code)

The county drainage board must repair and maintain all district ditches so that the cross-section and grade profile are stable, and conform, as nearly as possible, to the cross-section and grade profile as last constructed or reconstructed. To stabilize district ditch banks, the county drainage board may flatten the side slopes or lessen the grade in the channel.

Note: If the formally established grade profile or cross-section is changed, the county drainage board must follow the procedures outlined on pages 6-11 & 6-12.

Surface Waters

Surface water entering a district ditch, whether from a private or district drain, must not cause erosion or sedimentation.

To ensure compliance with this requirement, the county drainage board may require:

- installation of buffer strips,
- installation of pipe inlets or drop spillways, or
- maintenance of field residue.

New District Ditches

All district ditches constructed after July 1, 1995, must be designed and constructed with the capacity to remove runoff from a 10-year, 24-hour storm within 48 hours (s. ATCP 48.26(1), Wis. Admin. Code).

Disposal of Materials (s. ATCP 48.32, Wis. Admin. Code)

Materials dredged or excavated during cleanout and repair must be spread or piled to ensure long-term stability of the materials. There are two acceptable methods for deposition of materials:

- *Land Spreading*: Materials which are land spread must be graded and smoothed to conform with the surrounding lands. The slope of the spread materials must be 8:1 or flatter, and the materials may not be more than two feet deep at the top of the district ditch bank.
- *Piling*: Spoil piles may not be closer than 12 feet from the top of the ditch bank. The spoil pile must have a stable side slope, not exceeding 2:1.

Note: These standards also apply to materials dredged or excavated during construction or restoration projects. No materials may be placed in a wetland except in compliance with applicable federal, state, and local permit requirements.

The figure below, based on American Society of Agricultural Engineering, Engineering Practice 407.1, section 5 illustrates spoil deposition requirements:

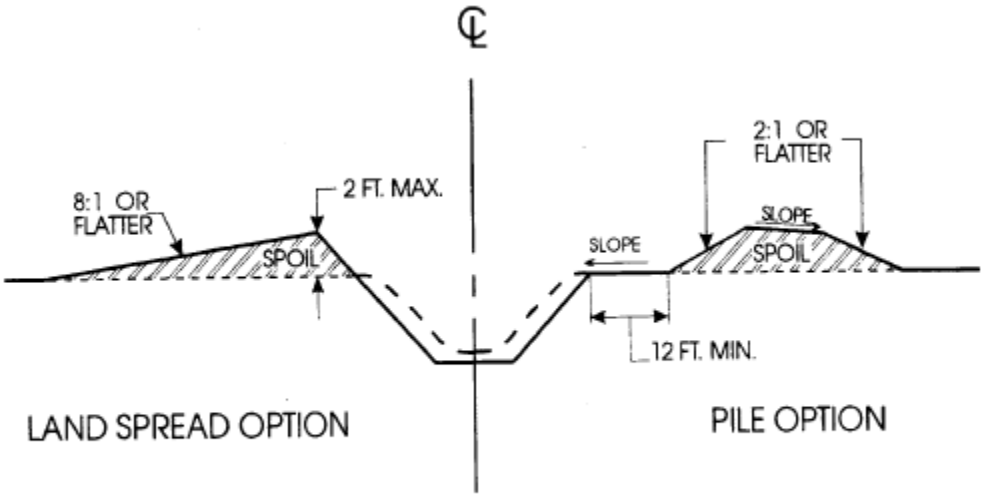

Figure 1. Methods of Material Disposal

CONSTRUCTION PROJECTS

Activities Requiring Prior Approval (s. ATCP 48.34, Wis. Admin. Code)

Construction projects must be approved by the department before a county drainage board can approve or begin the construction project. Construction projects include the following:

- Constructing or modifying any district drain, or authorizing any person to construct or modify a district drain
- Installing or modifying any structure in a district drain, or authorizing any person to install or modify any structure in a district drain
- Authorizing any person (including a municipality or government entity) to connect that person's private drain to a district drain
- Changing the formally established cross-section, grade profile, or alignment of a district drain, regardless of whether that change involves any physical alteration to a district drain or structure.

Note: A county drainage board is encouraged to consult with the department for advice or assistance whenever it is contemplating construction projects in a district. This will facilitate timely assistance in the planning stages, as well as timely review and approval. Projects must be designed by a qualified engineer. Also, all damages awarded to a landowner in excess of assessments for the work must be paid before the county drainage board or its contractor may begin construction on the land.

A permit may also be needed from the Department of Natural Resources before beginning a construction project.

Once the department has approved the construction project, changes cannot be made to the project plan and design specifications without the department's written approval.

Design Standards

District Drains (s. ATCP 48.26, Wis. Admin. Code)

Construction projects must be designed by an engineer from the department's list of qualified engineers. Every district drain constructed after July 1, 1995, must be designed and constructed so that it is capable of removing the volume of water from a 10-year, 24-hour rainfall event within 48 hours after that rainfall event. The district ditch bed, banks, and related structures such as culverts, bridges and inlets, must be designed, constructed, and maintained to remain stable when subjected to the 10-year peak discharge.

Note: A district ditch is not required to contain the entire volume of water from the peak discharge. District ditches or structures, constructed prior to July 1, 1995, are not held to the standard.

Design Standards (cont.)

Private Drains (s. ATCP 48.30(5), Wis. Admin. Code)

Private drains that transport water to district drains, whether from agricultural or nonagricultural lands, must be designed, constructed, and maintained to prevent soil erosion and to minimize the movement of suspended solids into district drains. A county drainage board may require that private drains carrying water from nonagricultural lands be designed according to a stormwater management plan which includes settling ponds or detention basins.

Requesting Project Approval (s. ATCP 48.36, Wis. Admin. Code)

The county drainage board must submit a written request for approval of the proposed construction project to the department. The following information may be required:

- The district name or number.
- A project description and purpose, indicating why the project is needed.
- The names of the persons, if any, who are asking the county drainage board to do the project.
- Estimated cost, including any proposed damage awards.
- A statement of goals expected to be achieved, including drainage volume, thoroughness of drainage, and geographic scope of drainage.
- Design specifications and plans prepared by an engineer included on the department's list of qualified engineers. The specifications must meet the applicable standards under s. ATCP 48.20, 48.21, and 48.22, Wis. Admin. Code. The engineer must include a statement as to whether or not, in the engineer's judgment, the proposed action as designed will achieve the goals of the proposed project.

A map and description of lands and waters affected by the project. The map should indicate the following information:

Current and proposed use of affected lands.

The topography of the affected lands.

The location of any affected wetlands.

The identity and location of any affected navigable waterway, stormwater management district, lake district, priority watershed, or lake under s. 144.25, Stats., or wellhead protection area under ch. NR 811.

- The identity and location of any affected building, transportation corridor, or utility easement.
-

Requesting Project Approval (cont.)

- A hydrology analysis prepared by an engineer included on the department's list of qualified engineers. The hydrology analysis must include the information listed in s. ATCP 48.36(h), Wis. Admin. Code.

A construction plan, if applicable, that includes a plan for controlling erosion, the estimated amount of material that will be removed (if any), and a description of where and how removed material (if any) will be deposited.

A statement that the county drainage board has followed the requirements for providing notice of the public hearing, and for holding the public hearing (see pages 5-10 & 5-11).

All of the following information if a county drainage board proposes to alter the formally established cross-section, grade profile, or alignment of a district drain:

The current cross-section, grade profile, or alignment.

The proposed new cross-section, grade profile, or alignment.

Note: The new specifications must be prepared by an engineer included in the department's list of qualified engineers.

If the county drainage board is proposing to change the formally established alignment or grade profile, a statement that the county drainage board has complied with s. ATCP 48.21(4)(a)1 or 48.21(5)(a)1, respectively.

A statement explaining how the proposed project will affect the assessment of benefits to landowners, if at all.

The financing plan for the proposed project, including any proposed cost assessments to lands in the drainage district. (see s. ATCP 48.02, Wis. Admin. Code.)

- An assessment of the effects on land and land uses.
- An assessment of the impact on surface water levels, quality, and temperature.
- An assessment of the effects on groundwater levels and quality.
- An assessment of the possible alternatives to the proposed project, including doing nothing, and their effects. The assessment should include the relative benefits, costs, and environmental effects of the alternatives.
- A statement verifying the filing of copies with other agencies.

Requesting Project Approval (cont.)

- Other information that the department considers necessary.

Note: A county drainage board must simultaneously file copies of all of these materials with the DNR, the US Army Corps. of Engineers, the county zoning administrator, the county land conservation committee, every affected municipality, and the county highway committee, if a public highway will be affected .

Notice and Hearing

Before submitting an application to the department for construction project approval, a county drainage board must hold a public hearing. The county drainage board must send written notice to all landowners in the drainage district at least 30 days prior to the hearing, and must publish a class 3 hearing notice in the official county newspaper. The hearing notice must clearly describe the proposed project. The county drainage board must allow 30 days after the public hearing for landowners to provide comments.

Department Approval or Disapproval (s. ATCP 48.38, Wis. Admin. Code)

The department has 45 days to review the materials after the submission is determined complete, and issue a written approval or disapproval of the proposed project. The department may also issue a conditional approval of the project, specifying the conditions in writing. If the proposed project is not approved, the department will provide reasons to the county drainage board explaining why the project was not approved. The department can disapprove a proposed project for any of the following reasons:

- The county drainage board has failed to provide the information required.
- The proposed project would violate the rule or statutes.
- The requested approval would violate the rule or statute.
- The proposed project is not properly designed or will not achieve the goals of the project.

Notes: The department may extend the 45 day deadline for good cause.
A county drainage board may also be required to get pre-approval for a project from DNR or other agencies.

A county drainage board may not deviate from plans approved by the department unless it obtains subsequent written approval from the department.

The department cannot approve a project that will alter the formally established cross-section, grade profile, or alignment of a district drain, unless the county drainage board has followed the requirements for changing the formally established specifications. (See pages 6-11 & 6-12.)

Department

The department is required to prepare an environmental assessment for a

Approval or Disapproval (cont.)

Environmental Assessment (s. ATCP 48.36(5), Wis. Admin. Code)

proposed project if any of the following apply:

- The proposed action will drain more than 200 acres of land not previously drained, or will substantially alter drainage from more than 200 acres of land.
- The proposed project will drain more than 5 acres of wetland.
- The proposed project will include constructing or modifying a dam in a district or private drain that has a navigable stream history.
- The proposed project will include work in a district drain with a cold water fishery and a navigable stream history.
- The proposed project will substantially affect the base flow in surface waters of the state.
- The department determines that an environmental assessment is needed to determine whether an environmental impact statement is required to be prepared. (See s. ATCP 48.36(6) and 3.03, Wis. Admin. Code.)

Chapter 7

Enforcing Orders, Approvals, and Other Actions in Drainage Districts

COUNTY DRAINAGE BOARD

County Drainage Board Orders and Rules

The county drainage board may bring actions in circuit court to obtain injunctions, exercise eminent domain, seek damages and other relief in regard to the enforcement of its own orders and rules. Assessments are enforced through the procedures set out in chs. 74 and 75, Wis. Stats., which apply to the collection of delinquent taxes.

County Drainage Board Regulation of Practices on Private Lands

As a result of changes in land use or other factors, a county drainage board may take action to:

- Order annexation of benefited lands (ss. 88.77 and 88.78, Wis. Stats.).
- Reassess lands to better allocate benefits (s. 88.46, Wis. Stats.).
- Order the removal of dams or other obstructions (s. 88.72, Wis. Stats., and s. ATCP 48.26(4), Wis. Admin. Code).
- Order the enlargement of a waterway or construction of a new waterway through an embankment, bridge, grade, or culvert which has been setting back or diverting a natural watercourse upon lands in the district (s. 88.89, Wis. Stats.).
- Sue to recover damages from a landowner outside the district (s. ATCP 48.04(1)(b), Wis. Admin. Code).
- Enter into an agreement with a landowner to receive compensation for costs incurred by the district as a result of the landowner's actions (s. ATCP 48.04(1)(c), Wis. Admin. Code).
- Levy cost assessments against another district, or upstream municipality for damages or costs resulting in the district (s. 88.64, Wis. Stats., and s. ATCP 48.04(3), Wis. Admin. Code).

County Drainage Board Regulation of Practices on Private Lands (cont.)

If a private drain does not comply with the design standards or maintenance requirements, or a landowner fails to implement required erosion control practices, the county drainage board may do any of the following:

- Order that the private drain be modified to comply with the requirements (s. ATCP 48.30(4)(b)(2), Wis. Admin. Code).
- Order that the private drain be removed or disconnected from the district drain (s. ATCP 48.30(4)(b)(3), Wis. Admin. Code).
- Refuse to permit the private drain to connect to the district drain (s. ATCP 48.30(4)(b)(1), Wis. Admin. Code).
- Order that the private drain be reconnected to the district drain.
- Order the restoration of any spoil bank.
- Enter into an agreement with the landowner to receive compensation for costs incurred by the district as a result of the noncompliance.
- Assess the landowner for construction costs incurred by the county drainage board because of the noncompliance.
- Sue the landowner. The county drainage board may seek an injunction and damages. Violations of the standards may also result in civil forfeitures.

  Note: Damages includes payments that the district would have received during the time that the illegal connection or extension existed if the lands drained had been subject to assessment.

DEPARTMENT OF AGRICULTURE, TRADE AND CONSUMER PROTECTION

Inspections or Investigations (s. ATCP 48.50, Wis. Admin. Code)

The department may conduct an investigation to check compliance with the statute and the rule. A department representative may enter onto any lands to conduct the investigation, or obtain access to any documents related to the matter.

Orders

If a county drainage board is out of compliance, the department may,

(s. ATCP 48.52(1), Wis. Admin. Code)	without prior notice or hearing, issue an order which does any of the following: ɔ Prohibits the construction or modification of a district drain or corridor. ɔ Requires the county drainage board to file specific maintenance and repair plans with the department. ɔ Requires the county drainage board to file a copy of any record or report with the department. ɔ Requires the county drainage board to comply with any requirements within the rule and statutes. *Note: The department may issue a special order directing any person to stop work on a drainage district project until plans are approved or the project complies with all requirements.*
Injunctions or Forfeitures	The department may seek an injunction or other relief from the circuit court for violations of its orders. Any person who fails to comply with an order or violates any statute, rule, or department requirement may be required to pay a forfeiture of $25-$500 per violation. Each day is a separate offense. *Note: Actions for injunctions or civil forfeitures must be brought in the circuit court.*
Hearings on Compliance Orders (s. ATCP 48.54, Wis. Admin. Code)	Any person who feels adversely affected by any order described above, may request a hearing at the department. The department must hold an informal hearing within 10 days of receiving the request. If the issue is not resolved after the informal hearing, the person may request a contested case hearing on the compliance order from the department. *Note: Contested case hearings are governed by the provisions of ch. 227, Wis. Stats. Please contact the department if you need a copy of this statute.*
Right to Appeal Hearing Decisions	A person adversely affected by a final decision of a contested case hearing at the department may do either of the following: ɔ File a written petition with the department within 20 days for a rehearing on the issue. (See s. 227.49, Wis. Stats.) ɔ File an appeal with the circuit court within 30 days of the department decision. (See ss. 227.52 and 227.53, Wis. Stats.)
Variances (s. ATCP 48.56, Wis. Admin.	The department may grant a variance from a standard or requirement in the rule, provided the variance is consistent with the objectives of the rule. The department will specify in its variance what changes it is making in the

Code)	requirements of the rule, and how the county drainage board or individual is expected to comply. Variances may apply to only one district, or one county drainage board, or may apply to all districts in the state. Variances may not be granted from statutory requirements. The department has no authority to excuse a county drainage board from fulfilling the requirements in the statutes.

Appendix A

Glossary and Definitions

GLOSSARY

Chapter 88, Wis. Stats. (ch. 88):
Chapter 88, Wisconsin State Statutes, *Drainage of Lands*, is the state statute that governs the formation and activities of drainage districts in Wisconsin.

Chapter ATCP 48, Wis. Admin. Code (ch. ATCP 48):
Chapter ATCP 48, Wisconsin Administrative Code, *Drainage Rule*, is the state administrative code that involves the management and operation activities of drainage districts in Wisconsin.

DATCP:
The Wisconsin Department of Agriculture, Trade and Consumer Protection

DNR:
The Wisconsin Department of Natural Resources

Drainage Law:
Wisconsin Drainage Law is made of two components: ch. 88 of the statutes and ch. 48 of the administrative rules. Both chapters carry the force and effect of law; they are not simply DATCP policy.

DEFINITIONS

Chapter 88

Benefits include all pecuniary advantages accruing to lands from the construction of the drain or proposed drain.

Board or ***drainage board*** means the board created and appointed under s. 88.16, 1991 Wis. Stats., or under s. 88.17.

Bond means any bond, note or other obligation of a drainage board issued under this chapter, including any refunding bond.

Clerk of court means the clerk of circuit court.

Cost of construction includes damages to land both within and outside the district, reasonable attorneys' fees for petitioners and the board, and all other reasonable and necessary expenses incurred in the organization of and in the construction and completion of the works of a drainage district.

County treasurer means the treasurer of the county in which the drainage board having jurisdiction of the drainage district is located.

Court means the circuit court of the county in which the drainage district is located or the circuit court having jurisdiction of the proceedings in any drainage district located in more than one county.

District means any district subject to this chapter.

Drain means any device for the drainage of water from land or the protection of land from water, including open ditches, tiles, pipelines, pumps, and levees.

Interested person includes the stator or any agency or subdivision thereof.

Judge means the judge of the circuit court having jurisdiction of the proceedings of any drainage district, or the person sitting for the judge.

Land or ***lands*** means any real property or interest therein, whether privately or publicly owned, including railroad rights-of-way, public highways, streets and alleys.

Mortgagee means every person holding a mortgage or an assignment of a mortgage against lands within a drainage district or proposed drainage distinct whose name and post office address is known to the board or whose mortgage or assignment is legally recorded and contains the post office address of such mortgagee or assignee.

Chapter ATCP 48

Agricultural lands means land in agricultural use as provided under s. 91.01(1), Wis. Stats. See Appendix F for a complete copy of this definition**.**

Base flow means the normal flow of water not associated with rainfall events.

Confirmed assessment means an assessment of costs or benefits that has been confirmed by a circuit court under ch. 88, Wis. Stats., or an assessment of costs or benefits ordered by a county drainage board after May 12, 1994**.**

Construction costs means costs incurred by a drainage district for a construction project. Construction costs include damages awarded to landowners in a drainage district who are adversely affected by a construction project, but does not include maintenance, restoration, or operating costs.

County drainage board means the board created and appointed under s. 88.17, Wis. Stats.

Cross-section means a series of vertical sections of a drain, taken at periodic intervals along the length of the drain at right angles to the center line of the alignment of the drain.

Department means the Wisconsin department of agriculture, trade and consumer protection.

District corridor means the access corridor and buffer strip established and maintained around a district ditch under s. ATCP 48.24, Wis. Adm. Code.

District ditch means a district drain which is in the form of a ditch.

District drain means a drain, including a main or lateral drain and all points of inlet to that drain, that is located within a drainage district and is designated as a district drain by one of the following:

a) A court order
b) A county drainage board action that complies with s. ATCP 48.20(5) or 48.21(2), Wis. Admin. Code.

NOTE: A drain is not necessarily a "district drain" just because it is located on land within a drainage district, or just because it provides drainage for more than one landowner. In some cases, lands within a drainage district are drained by private drains that empty into district drains. Private drains are not operated or maintained by the county drainage board; nor is there any district corridor required along private drains.

Drain means any facility, including a ditch, tile, pipe or other facility, for draining water from land. A *drain* can include structures and facilities, such as dams, culverts, pumps, inlet facilities, dikes, dams, and levees, that are associated with the drain.

Drainage district means a drainage district that is subject to ch. 88, Wis. Stats., regardless of whether the drainage district was formed under ch. 88, Wis. Stats., former ch. 89, Wis. Stats., or any other law.

Drainage ditch or ***ditch*** means a drain which is in the form of an open surface channel. ***Ditch*** includes the ditch bed, ditch banks, and any related structures and facilities such as culverts, bridges, and inlets.

Formally established means established or reestablished by any of the following:

a) Circuit court order.
b) County drainage board action that complies with s. ATCP 48.20 or 48.21, Wis. Admin. Code.

Grade profile means a vertical section along the alignment of a drain.

Maintenance costs means costs for the maintenance and repair of district drains and corridors under subch. IV, ch. ATCP 48, Wis. Adm. Code.

Navigable waters has the meaning given in s. 30.01(4m), Wis. Stats.

Non-agricultural lands means land other than agricultural lands, including land in residential, commercial, industrial, and transportation use.

Operating costs means costs, other than construction, maintenance, or restoration costs, that are lawfully incurred by a drainage district.

Parcel means a tract of land, all of which is held by the same landowner or landowners.

Person means any individual, partnership, corporation, firm, business trust, estate, trust, association, government, governmental subdivision or agency, or any other legal or commercial entity.

Private drain means any drain other than a district drain. A private drain includes a drain operated by the state or by a county, town, village, or city. A private drain is constructed or maintained by individual landowners.

Restoration or ***restoration project*** means dredging or other operations designed to bring the cross-section, grade profile, or alignment of a district drain into closer conformity with the formally established cross-section, grade profile, or alignment of that district drain.

Restoration costs means costs incurred for the restoration of a district drain.

Stable means resistant to erosion or deformation.

Ten-year peak discharge or ***10-year peak discharge*** means the maximum flow of water resulting from a 10-year 24-hour rainfall event.

Twenty five-year peak discharge or ***25-year peak discharge*** means the maximum flow of water resulting from a 25-year 24-hour rainfall event.

Wetlands has the meaning given in s. 23.32, Wis. Stats.

23.32 Wetlands mapping. (1) In this section "wetland" means an area where water is at, near, or above the land surface long enough to be capable of supporting aquatic or hydrophytic vegetation and which has soils indicative of wet conditions.

(2) (a) For the purpose of advancing the conservation of wetland resources the department shall prepare or cause to be prepared maps that, at a minimum, identify as accurately as is practicable the individual wetlands in the state which have an area of 5 acres or more.

(b) Mapping priorities, technical methods and standards to be used in delineating wetlands and a long–term schedule which will result in completion of the mapping effort at the earliest possible date, but not later than July 1, 1984, shall be developed by the department in cooperation with those other

state agencies having mapping, aerial photography and comprehensive planning responsibilities.

(c) Wetland maps shall be prepared utilizing the best methods practicable with the funds available for that purpose and shall be based upon data such as soil surveys, aerial photographs and existing wetland surveys and may be supplemented by on–site surveys and other studies.

(d) The department shall cooperate with the land information board under s. 16.967 in conducting wetland mapping activities or any related land information collection activities.

(3) (a) The department may sell, and may enter into contracts to sell, wetland maps. The fees for the maps shall be as follows:

1. For each paper map, $5.
2. For each aerial photograph, $10.
3. For each copy of a digital wetland data base covering one township, $15.

(b) The department, by rule, may increase any fee specified in par. (a). Any increased fee must at least equal the amount necessary to cover the costs of preparing, producing and selling the wetland maps.

History: 1977 c. 374; 1979 c. 221; 1983 a. 27; 1985 a. 29; 1989 a. 31; 1995 a. 27.

Woody vegetation means plants that contain substantial amounts of secondary xylem. *Woody vegetation* includes shrubs and trees but does not include herbs.

Appendix B

History of Drainage Law

HISTORY

Laws providing for the drainage of private land predate the creation of the State. The territorial laws of 1839 provided that a third party arbitrator was to determine the location of ditches when the surrounding farmers could not agree.

After Wisconsin became a state Chapter 237, Laws of 1852, required a judicial review of drainage projects whenever the involved parties could not agree on the location of drains. The first laws providing for the organized drainage of lands or community drains were the laws of 1862 and 1871, in which a procedure was established for creating county and town drains respectively. The county and town drainage laws were very similar, differing only in which governmental body administered the law.

In 1891, the laws allowed a quasi-public corporation to be organized under close judicial supervision for the purpose of draining agricultural land. This law allowed for the creation of drainage districts with the power to acquire lands and to go onto others' property for "the purpose of constructing, maintaining and operating drains, canals, ditches or the like for the drainage and reclaiming wet, submerged, overflowed and swamp lands..." Drainage districts were given the power of eminent domain and the additional authority to dredge or straighten streams beyond the boundaries of its district if it found that such extra territorial projects were necessary to provide an adequate outlet.

In the mid-1890s several dry years encouraged land speculation on much of the land that had been too wet to farm in previous years. These lands were quickly cultivated, but crops failed as the wetter years returned in the late 1890s. This spurred some of the most intense activity ever seen under the Drainage District laws. Between 1900 and 1905 many drainage districts were established, draining hundreds of thousands of acres.

The powers of drainage districts expanded in 1907 to allow them to change the course of navigable streams in order to improve drainage. Permits to alter navigable streams were not required until 1919 even then there was minimal enforcement until the early 1930's primarily because a limited staff at the enforcement agency. Any enforcement was restricted to larger streams and lakes whereas the drainage districts were primarily concerned with drainage of lands which relied initially on networks of small streams.

Town drains, county drains and drainage districts are forms of drainage organizations existing prior to 1965. Revised drainage laws of 1963 for the state created Chapter 88, Wis. Stats. This revision combined all formal drainage organizations into the regulatory review of Chapter 88 effective January 1, 1965.

Chapter 190, Laws of 1977, changed s. 30. 10, Wis. Stats., so that a large portion of previously regulated streams were exempted. It stated that any ditch within an established drainage district was, declared not navigable unless the DNR could show the streams were navigable before ditching. Chapter 339, Laws of 1981, changed s. 30. 10, Wis. Stats., and allowed for maintenance dredging of "farm drainage ditches" that drain agricultural land, without permits.

Appendix C

Guide for District Specifications

Guidelines for Preparation of Drainage District Specifications

These guidelines are intended to be used by county drainage board members and their agents in preparing the drainage district specifications required by s. ATCP 48.20, Wis. Admin. Code. The guidelines should be used in conjunction with the requirements of s. ATCP 48.20, Wis. Admin. Code. Following these guidelines will help produce high quality, consistent maps for all drainage districts.

GUIDELINES **The following information should be included on each sheet in the drainage district specification plan set:**
A title block. The title block should include, at a minimum, the drainage district name, the date that the plan sheet was prepared, the name of the organization that prepared the plan sheet, the name or initials of the person who prepared the map, and the name or initials of the person who reviewed the map.
The scale of the map. The scale of the map should be chosen to clearly show the required details of the map.
The county, township, range, and section numbers encompassed by the map.
The direction of north on the map.
Consecutively numbered sheets, and a notation of the total number of sheets in the plan set (i.e., Sheet 1 of 3).
The relation of each sheet to the other sheets in the plan set.
The stamp of the professional engineer who prepared or reviewed the map.

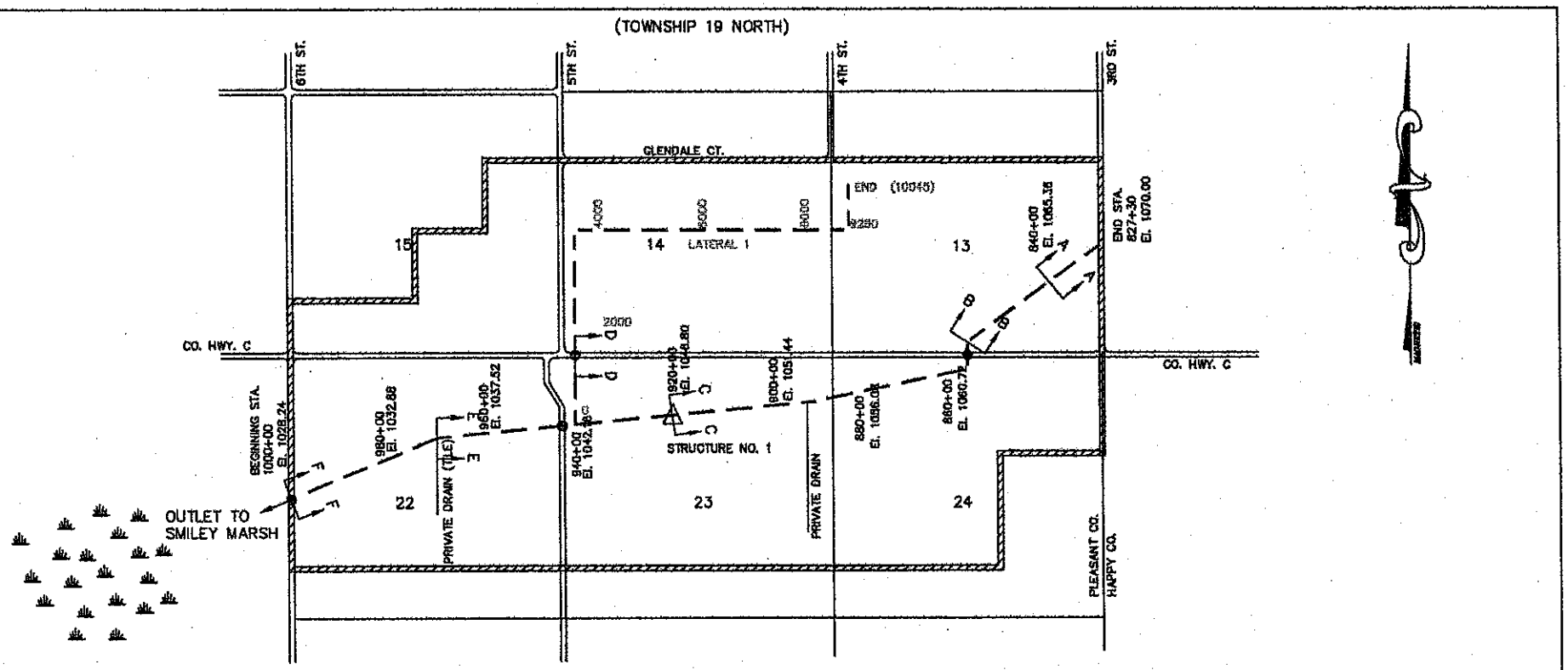

LEGEND

- DISTRICT BOUNDARIES
- DISTRICT DRAINAGE AND CORRIDOR
  CORRIDOR WIDTH EXTENDS 20 FEET FROM TOP OF DITCH BANK ON EACH SIDE OF DITCH.
- PRIVATE DRAIN
- △ DISTRICT STRUCTURE: DAM
- ● DISTRICT STRUCTURE: CULVERT
- A A CROSS SECTION LOCATION

SCALE

0 1000 2000 3000 4000
(FEET)

DRAINAGE DISTRICT NO. 11
PLEASANT COUNTY, WISCONSIN

T19N, R7E, SECTIONS 13, 14, 15, 22, 23, 24

MAP PREPARED BY PCTAD ENGINEERING

DRAINAGE BOARD APPROVAL:

DATE:

DATCP APPROVAL:

DATE:

DRAWN BY:

DATE:

PROFILE OF MAIN DITCH

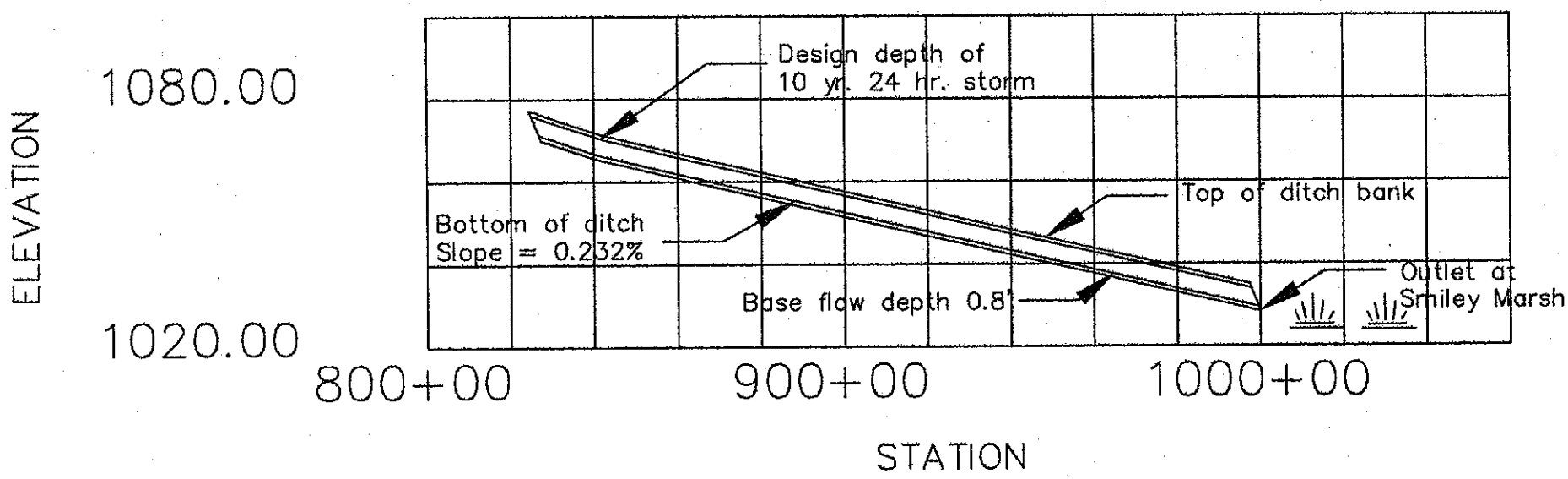

CROSS SECTION A–A OF MAIN @ 840+00

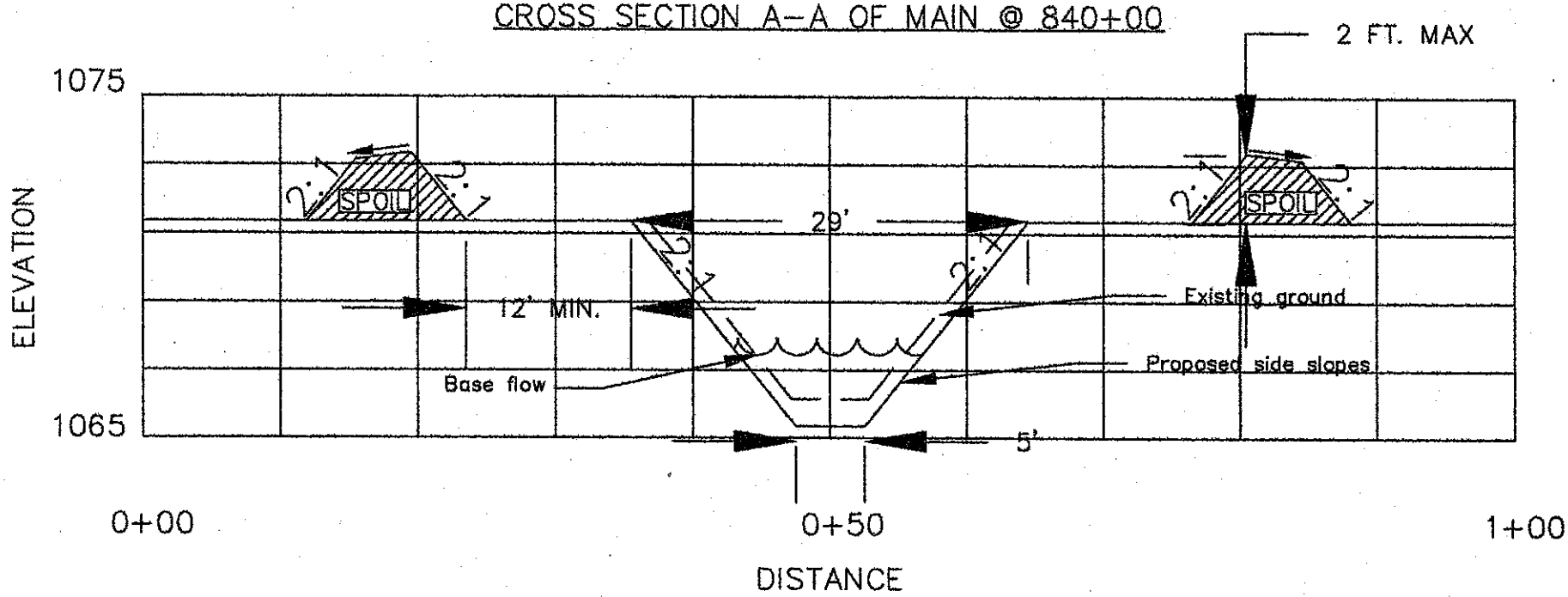

CROSS SECTION B–B OF BEND @ 860+20

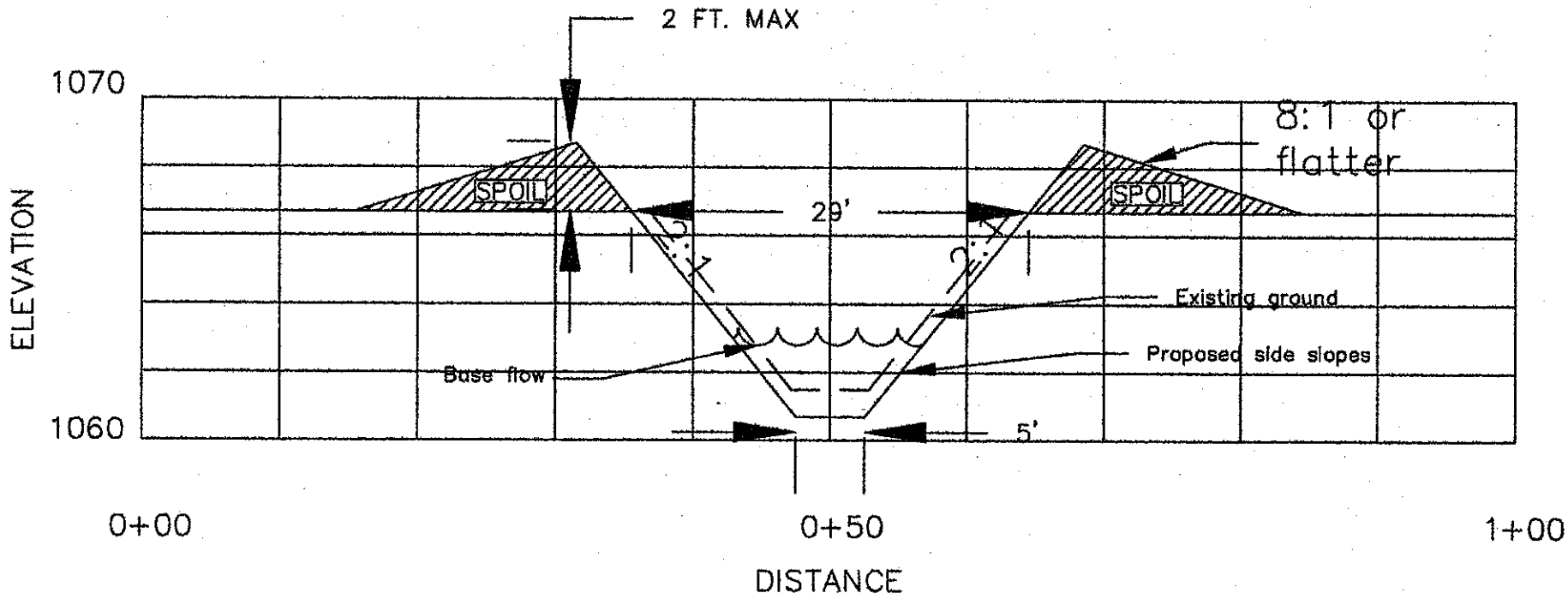

CROSS SECTION C-C OF DAM #1 MAIN @ 920+00

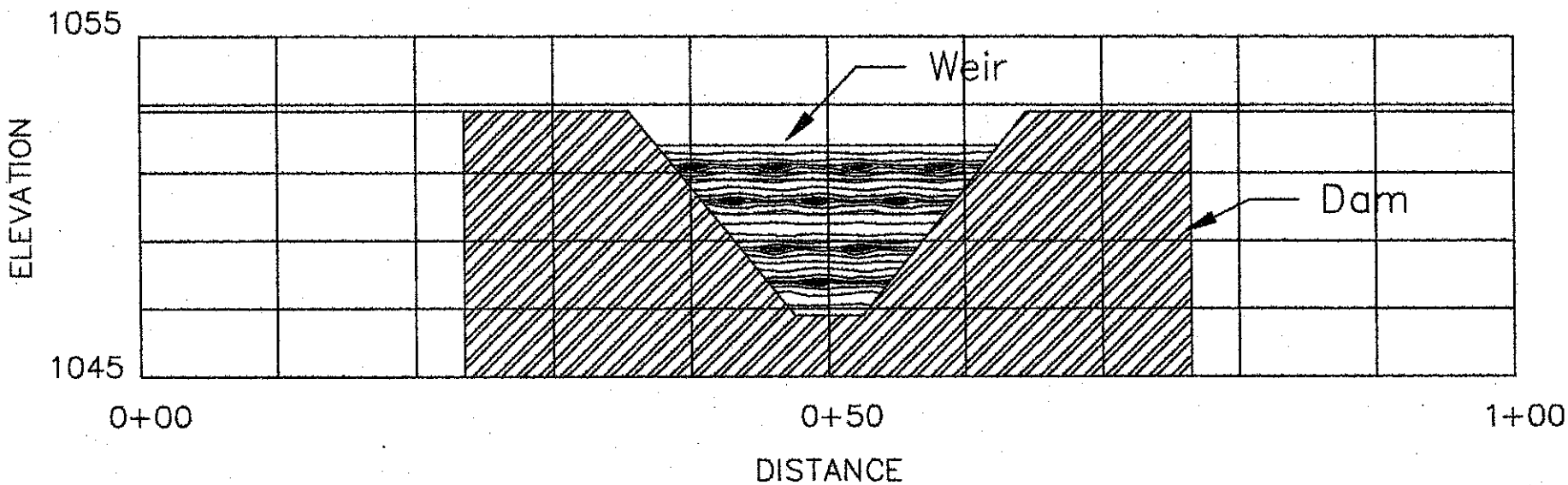

CROSS SECTION D-D OF CULVERT IN LATERAL @ 1400

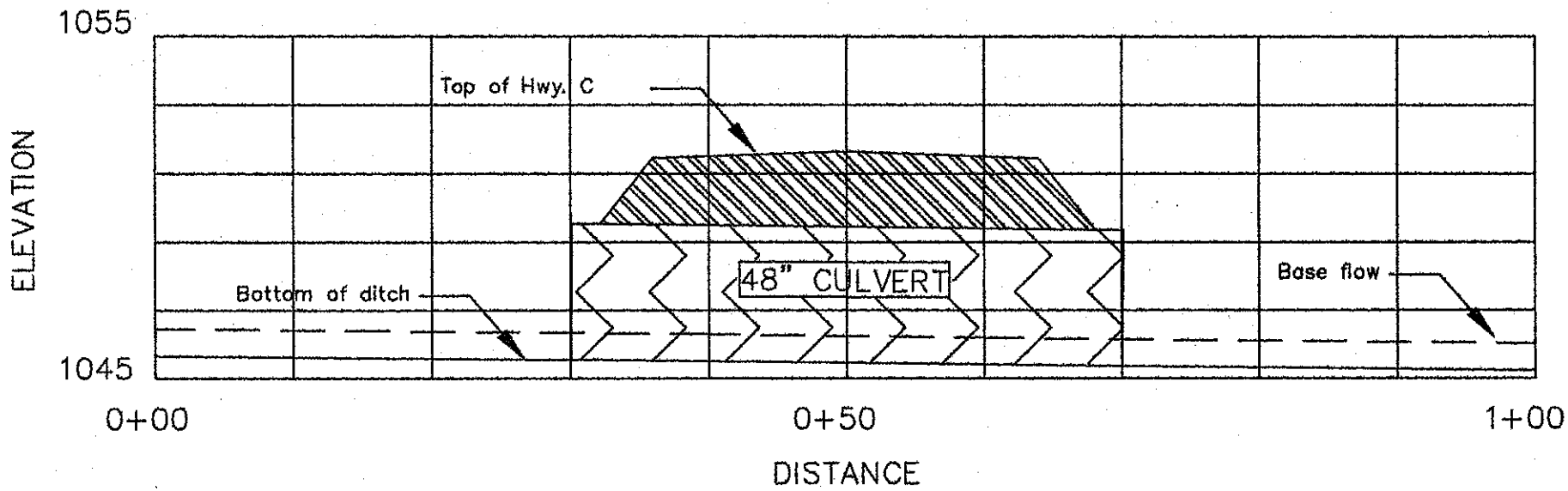

CROSS SECTION E-E OF PRIVATE DRAIN (TILE) @ 970+00

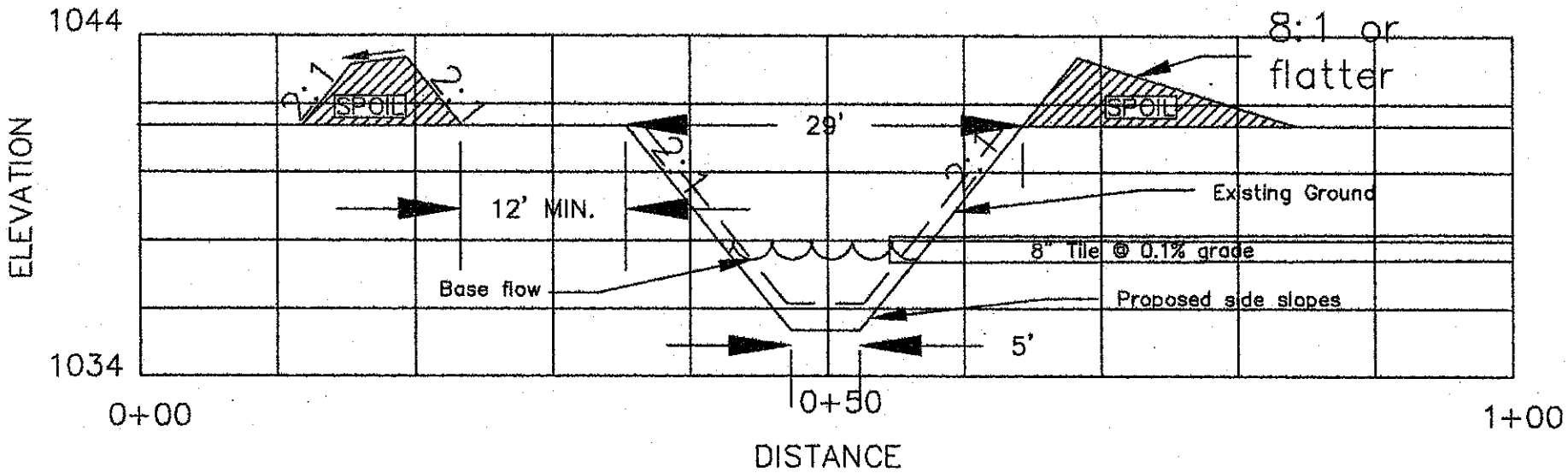

CROSS SECTION F-F AT OUTLET @ 1000+00

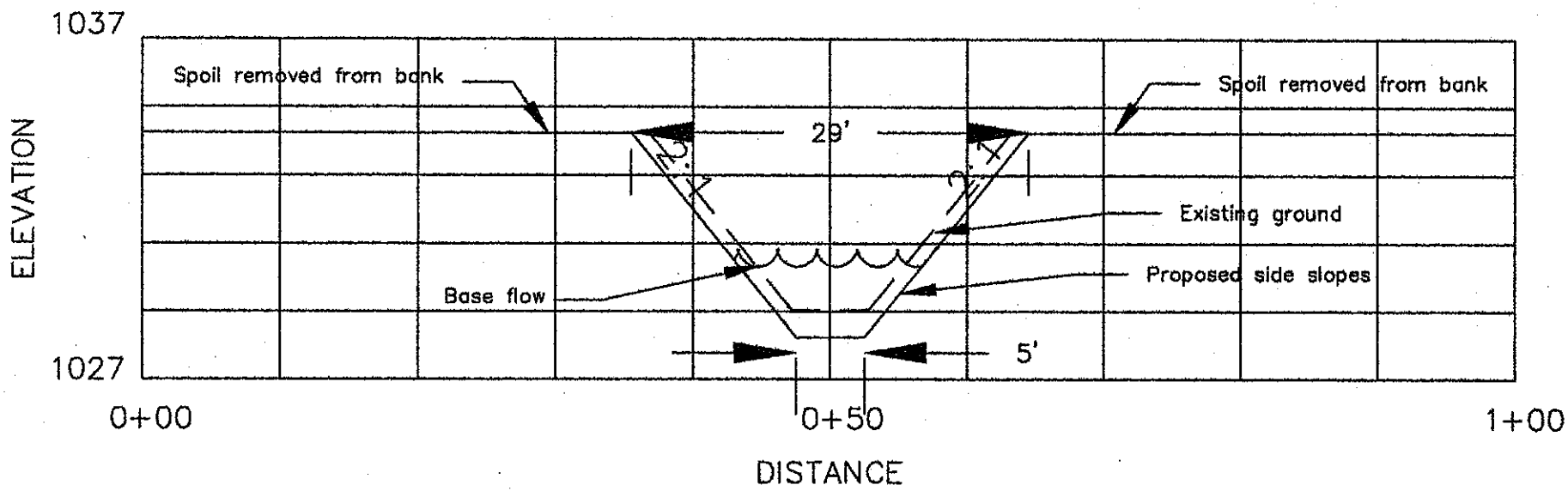

Appendix D

Chapter ATCP 48, Wisconsin Administrative Code

Unofficial Text (See Printed Volume). Current through date and Register shown on Title Page.

Chapter ATCP 48

DRAINAGE DISTRICTS

Subchapter I — Definitions
ATCP 48.01 Definitions.

Subchapter II — Assessing Drainage District Costs and Benefits
ATCP 48.02 Assessing costs against lands in a drainage district.
ATCP 48.04 Recovering costs from lands outside a drainage district.
ATCP 48.06 Assessing benefits to lands in a drainage district.
ATCP 48.08 Assessing benefits to agricultural lands.
ATCP 48.10 Assessing benefits to nonagricultural lands.

Subchapter III — Inspecting drainage districts
ATCP 48.12 Inspection authority.
ATCP 48.14 Annual inspection.
ATCP 48.16 Inspection after major storm.
ATCP 48.18 Department review and action.

Subchapter IV — District Map, Drains and Corridors
ATCP 48.20 Drainage district specifications.
ATCP 48.21 Changing drainage district specifications.
ATCP 48.22 Construction and maintenance; general.
ATCP 48.24 District corridors.
ATCP 48.26 District drains; design, construction and maintenance.
ATCP 48.28 Controlling woody vegetation.
ATCP 48.30 Controlling soil erosion and runoff.
ATCP 48.32 Deposition of materials.
ATCP 48.33 Structures impeding drainage.

Subchapter V — Construction Projects and Drainage Alterations; Department Approval
ATCP 48.34 Construction projects and drainage alterations; department approval required.
ATCP 48.36 Applying for approval.
ATCP 48.38 Department approval or disapproval.

Subchapter VI — Landowner Rights and Responsibilities
ATCP 48.40 Notice of landowner actions affecting drainage district.
ATCP 48.42 Removing lands from drainage district.
ATCP 48.43 Connecting private drains to district drains; extending private drains.
ATCP 48.44 Obstructing or altering district drains.
ATCP 48.45 Landowner rights.

Subchapter VII — Drainage District Records and Financial Management
ATCP 48.46 Records required.
ATCP 48.48 Care and inspection of records.

Subchapter VIII — Enforcement and Variances
ATCP 48.49 Financial management.
ATCP 48.50 Investigations.
ATCP 48.52 Compliance orders.
ATCP 48.54 Hearing on compliance order.
ATCP 48.56 Variances.

Subchapter IX — Grants to County Drainage Boards
ATCP 48.60 Grants to county drainage boards.

Note: This chapter establishes legal obligations related to drainage districts:

Drainage districts are special purpose districts formed for the purpose of draining land, primarily for agricultural purposes. Lands within a drainage district are drained by means of common drains that cross individual property boundaries. Chapter 88, Stats., spells out procedures for creating, modifying and dissolving drainage districts.

County drainage boards are responsible for operating drainage districts in compliance with ch. 88, Stats., and this chapter. A county drainage board may levy assessments against landowners in a drainage district to pay for the design, construction and maintenance of district drains, and to pay other district operating costs. The county drainage board must allocate cost assessments between landowners based on a drainage district benefit assessment that complies with this chapter.

The state of Wisconsin department of agriculture, trade and consumer protection monitors county drainage board compliance with ch. 88, Stats., and this chapter. Drainage district specifications and construction projects must be approved by the department. Within the limits of available resources, the department also provides technical assistance to county drainage boards.

County drainage boards are primarily responsible for resolving drainage disputes within and between drainage districts. A landowner may petition a county drainage board to comply with applicable requirements under ch. 88, Stats., and this chapter. A landowner may also ask the department to order a county drainage board to comply.

A county drainage board may prevent municipalities and other persons from connecting their drains to district drains, except under terms prescribed by the county drainage board. A county drainage board may also require a person to disconnect a drain. If a proposed connection will increase costs to the drainage district, the county drainage board may assess costs to the person wishing to connect.

Landowners in a drainage district have certain rights and responsibilities prescribed by ch. 88, Stats., and this chapter. Drainage rights are based on drain specifications formally established by the circuit court (or by a county drainage board under this chapter). A county drainage board may not change established drain specifications without department approval. The county drainage board must comply with procedures designed to protect landowner rights.

A change of land ownership does not relieve or deprive a succeeding landowner of rights or responsibilities that run with the land under ch. 88, Stats., or this chapter.

A county drainage board must comply with public records and open meeting laws under ch. 19, Stats. A county drainage board must also comply with specific procedures required by ch. 88, Stats., and this chapter.

This chapter is adopted under authority of ss. 88.11 and 93.07 (1), Stats.

Questions related to drainage districts and this chapter may be referred to the county drainage board or to the department at the following address:

Wisconsin Department of Agriculture, Trade and Consumer Protection
Division of Agricultural Resource Management
Bureau of Land and Water Resources
P.O. Box 8911
Madison, WI 53708−8911

Subchapter I — Definitions

ATCP 48.01 Definitions. In this chapter:

(1) "Agricultural lands" means lands in agricultural use as provided under s. 91.01 (1), Stats.

(2) "Base flow" means the normal flow of water not associated with rainfall events.

(3) "Confirmed assessment" means an assessment of costs or benefits that has been confirmed by a circuit court under ch. 88, Stats., or an assessment of costs or benefits ordered by a county drainage board after May 12, 1994.

(4) "Construction costs" means costs incurred by a drainage district for a construction project. "Construction costs" includes damages awarded to landowners in a drainage district who are adversely affected by a construction project, but does not include maintenance, restoration or operating costs.

(6) "County drainage board" means the board created and appointed under s. 88.17, Stats.

(6m) "Cross−section" means a series of vertical sections of a drain, taken at periodic intervals along the length of the drain at right angles to the center line of the alignment of the drain.

Note: See s. ATCP 48.20 (1) (b).

(7) "Department" means the state of Wisconsin department of agriculture, trade and consumer protection.

(8) "District corridor" means the access corridor and buffer strip established and maintained around a district ditch under s. ATCP 48.24.

(9) "District ditch" means a district drain which is in the form of a ditch.

(10) "District drain" means a drain, including a main or lateral drain and all points of inlet to that drain, that is located within a drainage district and is designated as a district drain by one of the following:

(a) A court order.

(b) A county drainage board action that complies with s. ATCP 48.20 (5) or 48.21 (2).

Note: A drain is not necessarily a "district drain" merely because it is located on land within a drainage district, or merely because it provides drainage for more than

Unofficial Text (See Printed Volume). Current through date and Register shown on Title Page.

one landowner. In some cases, lands within a drainage district are drained by private drains that empty into district drains. Private drains are not operated or maintained by the county drainage board; nor is there any district corridor surrounding a private drain.

(11) "Drain" means any facility, including a ditch, tile, pipe or other facility, for draining water from land. "Drain" includes structures and facilities, such as dams, culverts, pumps, inlet facilities, dikes, dams and levees, that are appurtenant to a drain.

(12) "Drainage district" means a drainage district that is subject to ch. 88, Stats., regardless of whether the drainage district was formed under ch. 88, Stats., former ch. 89, Stats., or any other law.

(13) "Drainage ditch" or "ditch" means a drain which is in the form of an open surface channel. "Ditch" includes the ditch bed, ditch banks, and any structures and facilities that are appurtenant to the ditch.

(13m) "Grade profile" means a vertical section along the alignment of a drain.

Note: See s. ATCP 48.20 (1) (c).

(13r) "Formally established" means established or reestablished by any of the following:

(a) Circuit court order.

(b) County drainage board action that complies with s. ATCP 48.20 or 48.21.

(14) "Maintenance costs" means costs for the maintenance and repair of district drains and corridors under subch. IV.

(14m) "Navigable waters" has the meaning given in s. 30.01 (4m), Stats.

(15) "Nonagricultural lands" means lands other than agricultural lands, including lands in residential, commercial, industrial and transportation use.

(17) "Operating costs" means costs, other than construction, maintenance or restoration costs, that are lawfully incurred by a drainage district.

(18) "Parcel" means a tract of land, all of which is held by the same landowner or landowners.

(19) "Person" means any individual, partnership, corporation, firm, business trust, estate, trust, association, government, governmental subdivision or agency, or any other legal or commercial entity.

(20) "Private drain" means any drain other than a district drain. "Private drain" includes a drain operated by the state or by a county, town, village or city.

(21) "Restoration" or "restoration project" means dredging or other operations designed to bring the cross−section, grade profile or alignment of a district drain into closer conformity with the formally established cross−section, grade profile or alignment of that district drain.

(22) "Restoration costs" means costs incurred for the restoration of a district drain.

(23) "Stable" means resistant to erosion or deformation.

(24) "Ten−year peak discharge" or "10−year peak discharge" means the maximum flow of water resulting from a 10−year 24−hour rainfall event.

(25) "Wetlands" has the meaning given in s. 23.32, Stats.

(26) "Woody vegetation" means plants that contain substantial amounts of secondary xylem. "Woody vegetation" includes shrubs and trees but does not include herbs.

History: Cr. Register, June, 1995, No. 474, eff. 7−1−95; r. (5) and (16), cr. (6m), (13m), (13r), (14m), (26), r. and recr. (9) to (11) and (13), am. (21), Register, August, 1999, No. 524, eff. 9−1−99.

Subchapter II — Assessing Drainage District Costs and Benefits

ATCP 48.02 Assessing costs against lands in a drainage district. (1) GENERAL. Pursuant to ch. 88, Stats., and this chapter, a county drainage board may, after public hearing, issue an order levying cost assessments against land in a drainage district to cover costs lawfully incurred by the drainage district, including construction, maintenance, restoration, legal and operating costs.

Note: See, e.g., ss. 88.23, 88.35, 88.45, 88.63, 88.70, 88.71, 88.72 and 88.78, Stats.

(2) CONSTRUCTION COST ASSESSMENTS; LIMITATIONS. (a) A county drainage board may not levy cost assessments to construct a new drainage district if the construction cost for that new district will exceed 75% of the total assessed benefits accruing to district landowners from the construction of that new district.

Note: See s. 88.36 (6), Stats. Benefits are assessed to landowners according to s. ATCP 48.06.

(b) A county drainage board may not levy cost assessments to construct enlarged or supplemental drains unless the drainage board finds that the benefits from the enlarged or supplemental drains will exceed the cost of construction.

Note: See s. 88.71 (1m), Stats. Benefits to landowners are assessed according to s. ATCP 48.06.

(c) A county drainage board may not, without obtaining the landowner's consent and sufficient security under s. 88.23 (3), Stats., levy a construction cost assessment against any parcel of land if the amount of the assessment, when added to construction cost assessments previously assessed to that parcel of land, exceeds the last confirmed assessment of benefits for that parcel of land. This paragraph does not limit the assessment of maintenance, restoration or operating costs.

Note: See ss. 88.23 (3) and 88.63, Stats. See definitions of "construction costs," "maintenance costs," "operating costs," and "restoration costs" under s. ATCP 48.01 (4), (14), (17) and (22).

(3) ALLOCATING COST ASSESSMENTS. Except as provided under sub. (4), a county drainage board shall allocate cost assessments among all of the parcels of land in a drainage district in proportion to the last confirmed assessment of benefits for each parcel. A county drainage board, when levying cost assessments, may allow a reasonable credit to a landowner who provides maintenance services or other "in kind" payments to the drainage district.

Note: A county drainage board assesses benefits to land parcels in a drainage district according to s. ATCP 48.06, and allocates cost assessments on the basis of those benefit assessments.

(4) CONSTRUCTION COSTS CAUSED BY INDIVIDUAL LANDOWNER. (a) Except as provided under par. (c), a county drainage board may assess, to a specified parcel of land in a drainage district, the full amount of any construction costs incurred by the drainage district as a direct result of any of the following:

1. A request by the landowner for drainage improvements that are solely of benefit to that land.

Note: Under s. 88.70, Stats., landowners who seek additional drainage for part of a drainage district may also petition the county drainage board to create a subdistrict for that purpose. The county drainage board may create a subdistrict, and may levy additional assessments against lands in the subdistrict to cover the costs of providing additional drainage for that subdistrict.

2. A land use change or other action by the landowner that alters the flow of water into or from a district drain.

3. A land use change or other action by the landowner that increases soil erosion or the movement of suspended solids to a district drain.

4. A failure by the landowner to maintain a private drain on that land in compliance with s. ATCP 48.30 (5).

5. A failure by the landowner to implement necessary erosion control practices on that land, as required by the county drainage board under s. ATCP 48.30 (6).

6. The landowner's extension of a private drain from the assessed land to land outside the district.

Note: If a private drain is extended or modified without approval, the county drainage board may also issue an order against the offending landowner or initiate an action for damages under s. 88.92, Stats. Alternatively, a county drainage board may annex the newly drained land under s. 88.78, Stats., and may assess the newly drained land according to s. 88.405, Stat.

(b) If, contrary to sub. (2) (c), a construction cost assessment under par. (a) will exceed the last confirmed assessment of benefits for the assessed parcel of land, the county drainage board may order a higher assessment of benefits for that land under s. ATCP

Unofficial Text (See Printed Volume). Current through date and Register shown on Title Page.

48.06 (2). The assessment of benefits may be increased by the full amount needed to accommodate the construction cost assessment under par. (a).

(c) Paragraph (a) does not apply to any of the following:

1. Maintenance, restoration or operating costs.

2. Construction costs incurred by a drainage district because the county drainage board has failed to comply with this chapter.

(5) ASSESSING COSTS TO STATE AND MUNICIPAL LANDS IN A DRAINAGE DISTRICT. (a) A county drainage board may levy cost assessments against agricultural lands in a drainage district that are owned by the state of Wisconsin, but may not levy cost assessments against other lands owned by the state.

Note: See s. 88.50, Stats.

(b) A county drainage board may levy cost assessments against lands in a drainage district that are owned by a county, town, village or city.

Note: See s. 88.48, Stats. Under s. 88.01 (11), Stats., "lands" include public streets and highways.

History: Cr. Register, June, 1995, No. 474, eff. 7−1−95; am. (3), Register, August, 1999, No. 524, eff. 9−1−99.

ATCP 48.04 Recovering costs from lands outside a drainage district. (1) GENERAL. Except as provided under subs. (2) and (3), a county drainage board may not levy a cost assessment on behalf of a drainage district against lands located outside the drainage district, but may do any of the following:

(a) Refuse to permit the connection of a private drain to a district drain, except as provided under s. 88.93, Stats.

Note: See s. 88.92, Stats.

(b) Initiate an action at law to recover damages, authorized by law, that are sustained by a drainage district as a result of an action or omission by an owner of land located outside the district.

(c) Enter into an agreement with any person under which that person agrees to compensate the drainage district for costs incurred by the drainage district because that person's private drain is connected to a district drain.

(d) Order the annexation, to a drainage district, of lands outside the district that benefit from the operation of any district drain.

Note: See s. 88.78, Stats.

(2) COST ASSESSMENTS AGAINST ANOTHER DRAINAGE DISTRICT. A county drainage board may levy cost assessments against a drainage district for the benefit of another drainage district.

Note: See ss. 88.49 and 88.69, Stats.

(3) ASSESSMENTS AGAINST MUNICIPALITIES FOR ENLARGEMENT OR MAINTENANCE OF DRAINS. A county drainage board may levy cost assessments against a municipality with territory upstream from any drain for any costs of enlarging or maintaining the drain that are attributable to increased water flow from land within the municipality.

Note: See s. 88.64, Stats.

History: Cr. Register, June, 1995, No. 474, eff. 7−1−95.

ATCP 48.06 Assessing benefits to lands in a drainage district. (1) INITIAL ASSESSMENT OF BENEFITS. When a drainage district is created, a county drainage board shall assess the benefits accruing from the drainage district to each parcel of land in the drainage district. The county drainage board shall assess benefits according to ch. 88, Stats., and this section. The drainage board's assessment of benefits shall provide the basis for the drainage board's allocation of cost assessments under s. ATCP 48.02 (3).

Note: See ss. 88.35 and 88.36, Stats.

(2) REASSESSING BENEFITS. (a) If a county drainage board determines that the last confirmed assessment of benefits for a drainage district no longer reflects the actual current benefits to parcels of land in that drainage district, the county drainage board may, after public hearing, issue an order reassessing benefits. A county drainage board may reassess benefits based on land use changes, the construction of new or modified district drains, the subdivision of lands, or other factors affecting the allocation of benefits to landowners.

Note: A reassessment under par. (a) should adjust all assessed benefits in the district, as necessary, to correct any inequities and injustices found by the board. The adjustment need not be proportional to the former confirmed benefits. See s. 88.46 (2), Stats.

(b) A county drainage board may reassess benefits under par. (a) on its own motion, or in response to a petition from landowners under s. 88.46, Stats. A reassessment of benefits provides the basis for any subsequent allocation of cost assessments under s. ATCP 48.02 (3).

Note: A landowner petition filed with the drainage board under s. 88.46, Stats., must be signed by at least 1/10 of the owners of land in a drainage district, or by the owners of at least 1/10 of the land in a drainage district.

(3) METHOD OF ASSESSMENT OR REASSESSMENT. (a) Except as provided under par. (b), a county drainage board shall assess benefits to agricultural lands according to s. ATCP 48.08, and shall assess benefits to nonagricultural lands according to s. ATCP 48.10.

(b) In lieu of an assessment method specified under s. ATCP 48.08 or 48.10, a county drainage board may adopt an equitable method of assessment which is approved by the owners of at least two−thirds of the assessed lands in the district. The landowners' approval shall be confirmed in a written agreement signed by the approving landowners.

(4) PROTECTED WETLANDS EXCLUDED FROM ASSESSMENT. A county drainage board may not assess benefits under this section to wetlands that are legally protected against drainage.

Note: For purposes of this subsection, "legally protected" wetlands means wetlands that are all of the following:

(1) Located outside the district corridor.

(2) Clearly described by means of a survey, map, aerial photograph or other document that indicates the size and location of the wetlands.

(3) Formally protected from drainage by at least one of the following means:

(a) A deed restriction.

(b) Enrollment in the federal wetlands reserve program, the federal water bank program, or another federal, state or county program that clearly protects the wetlands from drainage for a term of at least 10 years.

(c) A recorded easement for a term of at least 10 years.

(d) A master plan, approved by the Wisconsin board of natural resources, covering land owned by the Wisconsin department of natural resources.

(5) BENEFITS RELATED TO EXTENSION OF PRIVATE DRAIN. When assessing benefits to a parcel of land in a drainage district, a county drainage board may include any benefits accruing to lands outside the district which drain to district drains because a private drain has been extended from the assessed parcel to those outside lands.

Note: See also s. ATCP 48.02 (4) (a) 6.

History: Cr. Register, June, 1995, No. 474, eff. 7−1−95.

ATCP 48.08 Assessing benefits to agricultural lands. (1) FACTORS CONSIDERED. When assessing benefits to agricultural lands in a drainage district, a county drainage board shall consider all of the following factors:

(a) The estimated increase in land value resulting from drainage. When estimating an increase in land value, a county drainage board may consider the current and potential uses of the land, taking into account any deed restrictions, easements, restrictive covenants, or other use limitations recorded with the county register of deeds. A potential use does not include a use that is prohibited by law.

(b) The type, depth, quality and character of surface soil and subsoil on the assessed land, and the depth of the water table on that land.

Note: Soils with high water tables normally receive the greatest benefit from drainage.

(c) The amount of drainage required by, or provided to the assessed land.

(d) The thoroughness and reliability of drainage provided.

(e) The amount and frequency of flooding on the assessed land.

Unofficial Text (See Printed Volume). Current through date and Register shown on Title Page.

(f) The difficulty of draining the assessed land.

(g) Other factors which the county drainage board considers relevant.

Note: Information relevant to the assessment of benefits may be obtained from a variety of sources including soil survey reports, aerial photographs, topographic maps, cropping histories, wetland maps, maps of original benefitted acres, interviews with individual landowners and on−site investigations.

(2) BENEFITS ASSESSED BY 40−ACRE PARCELS. Benefits to agricultural lands shall be assessed parcel by parcel, with each parcel being not larger than 40 acres. If a landowner's parcel is larger than 40 acres, benefits shall be assessed for sub−parcels that are not larger than 40 acres each.

Note: See s. 88.35, Stats.

(3) ACREAGE EXCLUDED FROM ASSESSMENT. A county drainage board shall exclude the following acreage from any assessment of benefits under this subchapter:

(a) Acreage in a district corridor unless the county drainage board authorizes the landowner, under s. ATCP 48.24 (5), to engage in row cropping in the district corridor.

(b) Acreage permanently lost to the landowner because of the construction, restoration or maintenance of district drains or corridors, or the deposition of materials excavated in connection with that construction, restoration or maintenance.

(4) LAND USE CATEGORIES. When estimating land values under sub. (1) (a), a county drainage board may consider any of the following land use categories or other categories which the county drainage board considers appropriate:

(a) Residential uses.

(b) Commercial uses.

(c) Cropland, including dryland cropland, pasture, irrigated cropland or cranberry cropland.

(d) Abandoned cropland, including former agricultural land not currently used for agricultural, residential or commercial purposes.

(e) Woodland, including managed and unmanaged woodlands.

(f) Wetlands, including soils with standing water that have no significant agricultural value.

(5) DRAINAGE ASSUMPTIONS. When estimating land values associated with a potential use, a county drainage board may assume that the drained lands have access to an outlet at the formally established grade profile and cross−section, and that the necessary on−site drainage facilities are installed to permit the potential use.

History: Cr. Register, June, 1995, No. 474, eff. 7−1−95; am. (1) (a) and (b), r. (1) (g), renum. (1) (h) to be (1) (g), cr. (3) to (5), Register, August, 1999, No. 524, eff. 9−1−99.

ATCP 48.10 Assessing benefits to nonagricultural lands. (1) FACTORS CONSIDERED. When assessing benefits to nonagricultural lands in a drainage district, a county drainage board may consider all the factors specified for agricultural lands under s. ATCP 48.08 (1). The county drainage board may also consider the extent and frequency of additional discharges from the nonagricultural lands to district drains, and the drainage district's cost to accommodate those additional discharges. Additional discharges may include additional discharges of stormwater, wastewater, or precipitation runoff from impermeable surfaces.

Note: The county drainage board may also assess upstream municipalities for costs of enlarging or maintaining drains that are attributable to increased water flow from the municipality. See s. 88.64, Stats., and s. ATCP 48.04 (3).

(2) ALLOCATING ASSESSMENTS. A county drainage board may assess benefits to nonagricultural lands, including rural subdivisions or individual rural residences, based on a flat amount per lot, per acre, or per building or residence.

Note: See s. 88.35, Stats.

History: Cr. Register, June, 1995, No. 474, eff. 7−1−95.

Subchapter III — Inspecting drainage districts

ATCP 48.12 Inspection authority. (1) Pursuant to s. 88.13, Stats., a member of a county drainage board or an employee or other authorized agent of a county drainage board may enter any lands in a drainage district to perform an inspection under this subchapter, or to perform any other inspection of a district drain or corridor.

Note: A county drainage board may authorize a landowner in a drainage district to make an inspection as an agent of the board. See s. 88.63 (1), Stats.

(2) Before a county drainage board or its agent performs an inspection on private lands, other than in a district corridor under s. ATCP 48.24, the county drainage board or its agent shall notify the landowner of the inspection. Notice may be given in person, by telephone, by mail or, if the landowner is not available, by posting notice at a conspicuous location at an entrance to the land. Notice under this section is adequate if given at any time prior to entry.

(3) A county drainage board may employ or contract with any person to perform an inspection on behalf of the county drainage board.

Note: Section 88.20, Stats., prohibits conflicts of interest by members of a county drainage board. See also s. 946.13, Stats.

History: Cr. Register, June, 1995, No. 474, eff. 7−1−95.

ATCP 48.14 Annual inspection. (1) REQUIREMENT. A county drainage board or its authorized employee or agent shall annually inspect every drainage district. The inspection shall include an inspection of all district drains and district corridors, and shall determine all of the following:

(a) Whether district drains are being maintained in compliance with this chapter.

(b) Whether a district corridor has been established and is being maintained around every district ditch in compliance with this chapter.

(c) Whether landowners are complying with applicable requirements under this chapter.

(d) Whether, and to what extent, sedimentation has occurred in district drains.

(e) Whether the cross−sections or grade profiles of district drains have changed significantly from the formally established cross−sections or grade profiles.

(f) Whether any drains should be restored, altered or improved to ensure proper drainage, to reduce soil erosion or sedimentation problems, or to comply with this chapter.

(g) Whether the district drainage system is operating effectively to achieve the goals which have been specified for the drainage district pursuant to s. 88.63, Stats., and s. ATCP 48.36 (1) (f).

Note: A county drainage board may perform an annual inspection in stages during the year. Reports covering the various stages of the inspection may be combined in a single report under sub. (3).

(2) LANDOWNER PARTICIPATION. The county drainage board shall, by publishing a class 2 notice under ch. 985, Stats., notify the landowners in each drainage district of the inspection under sub. (1). The notice shall inform landowners and land users that they may accompany the inspection under sub. (1) of lands owned or used by them, and may submit comments related to the performance of the district drainage system.

(3) INSPECTION REPORT. A county drainage board shall, in conjunction with its annual report for each drainage district under s. 88.24, Stats., prepare an annual report summarizing the results of its inspection under sub. (1), including any comments received under sub. (2). The county drainage board shall file a copy of its report with the county zoning administrator and with the department by December 1 of each year. Before filing the report under this subsection, the county drainage board shall present its report at a public meeting which is preceded by a class 2 notice under ch. 985, Stats. Notice of the meeting shall also be sent to all known landowners in the drainage district.

Unofficial Text (See Printed Volume). Current through date and Register shown on Title Page.

Note: The department will make available, to the state of Wisconsin department of natural resources, copies of the reports which the department receives under sub. (3).

(4) REPORT CONTENTS. The county drainage board's annual inspection report under sub. (3) shall report the board's inspection findings related to each of the items listed under sub. (1). For each item, the report shall identify any problems, violations or deficiencies noted by the county drainage board. The report shall also specify how the county drainage board will address each problem, violation or deficiency.

History: Cr. Register, June, 1995, No. 474, eff. 7−1−95; am. (1) (e), Register, August, 1999, No. 524, eff. 9−1−99.

ATCP 48.16 Inspection after major storm. (1) REQUIREMENT. Within 3 weeks after a drainage district is affected by a storm that exceeds a 25−year 24−hour rainfall event for that county, the county drainage board or its authorized employee or agent shall inspect the district drains and corridors affected by the storm. The county drainage board shall inspect the district drains and corridors to determine the nature and extent of any storm damage, and to determine whether repairs are necessary. A 25−year 24−hour rainfall event is the amount of rain received over a 24−hour period as shown in Table 1.

TABLE 1

Probable 24−hour Rainfall Events, In Inches of rain, for counties in Wisconsin

	10−year	25−year		10−year	25−year
Adams	4.1	4.7	Outagamie	3.8	4.4
Ashland	3.9	4.3	Ozaukee	3.9	4.4
Barron	4.1	4.6	Pepin	4.3	4.8
Bayfield	3.9	4.4	Pierce	4.2	4.8
Brown	3.7	4.3	Polk	4.1	4.7
Buffalo	4.3	4.8	Portage	4.0	4.5
Burnett	4.0	4.6	Price	4.0	4.4
Calumet	3.8	4.4	Racine	4.0	4.6
Chippewa	4.1	4.7	Richland	4.3	4.9
Clark	4.1	4.7	Rock	4.1	4.7
Columbia	4.1	4.7	Rusk	4.1	4.6
Crawford	4.3	5.0	St. Croix	4.2	4.7
Dane	4.2	4.8	Sauk	4.2	4.8
Dodge	4.0	4.6	Sawyer	4.0	4.5
Door	3.6	4.1	Shawano	3.8	4.4
Douglas	3.9	4.4	Sheboygan	3.8	4.4
Dunn	4.2	4.7	Taylor	4.1	4.6
Eau Claire	4.2	4.7	Trempealeau	4.3	4.8
Florence	3.6	4.1	Vernon	4.3	4.9
Fond du Lac	3.9	4.5	Vilas	3.8	4.3
Forest	3.7	4.2	Walworth	4.1	4.6
Grant	4.3	5.0	Washburn	4.0	4.5
Green	4.2	4.8	Washington	3.9	4.5
Green Lake	4.0	4.6	Waukesha	4.0	4.6
Iowa	4.3	4.9	Waupaca	3.9	4.5
Iron	3.8	4.3	Waushara	4.0	4.6
Jackson	4.2	4.8	Winnebago	3.9	4.5
Jefferson	4.0	4.6	Wood	4.1	4.6
Juneau	4.1	4.7			
Kenosha	4.0	4.6			
Kewaunee	3.7	4.2			
LaCrosse	4.3	4.9			
Lafayette	4.3	4.9			
Langlade	3.8	4.3			
Lincoln	3.9	4.4			
Manitowoc	3.8	4.3			
Marathon	4.0	4.5			
Marinette	3.6	4.1			
Marquette	4.1	4.6			
Menominee	3.7	4.3			
Milwaukee	3.9	4.5			
Monroe	4.2	4.8			
Oconto	3.7	4.2			
Oneida	3.8	4.3			

Note: The data of table 1 were obtained by extrapolation from maps published by the National Weather Service in Technical Paper No. 40, "Rainfall Frequency Atlas of the United States."

(2) INSPECTION REPORT. A county drainage board shall prepare a report summarizing the results of its storm inspection under sub. (1). The report shall identify any significant storm damage identified in the inspection, and shall indicate how the board plans to repair the damage. The county drainage board shall file a copy of its storm inspection report with the department when the county drainage board files its annual report under s. ATCP 48.14.

History: Cr. Register, June, 1995, No. 474, eff. 7−1−95.

ATCP 48.18 Department review and action. (1) The department shall review inspection reports submitted by county drainage boards under this subchapter.

(2) The department may do any of the following which the department considers necessary:

(a) Inspect and copy county drainage board records, or issue an order under s. ATCP 48.52 requiring a county drainage board

Unofficial Text (See Printed Volume). Current through date and Register shown on Title Page.

to file with the department a copy of any record or report required under this chapter.

(b) Conduct inspections or other investigations to verify the findings made or reported by a county drainage board.

(c) Issue an order under s. ATCP 48.52 requiring a county drainage board to file a specific maintenance or repair plan. As part of the maintenance or repair plan, the department may require the county drainage board to include engineering specifications, specifications for the deposition of dredged materials, a financing plan and other relevant information.

(d) Issue an order under s. ATCP 48.52 which prohibits the construction or alteration of a district drain or corridor if the construction or alteration violates this chapter.

(e) Issue an order under s. ATCP 48.52 which requires a county drainage board to comply with applicable requirements under this chapter.

History: Cr. Register, June, 1995, No. 474, eff. 7−1−95.

Subchapter IV — District Map, Drains and Corridors

ATCP 48.20 Drainage district specifications. (1) SPECIFICATIONS REQUIRED. By December 31, 2000, every county drainage board shall adopt complete specifications for each drainage district under that board's jurisdiction. The department shall approve the specifications before the county drainage board adopts them. The specifications shall include all of the following:

(a) A map which clearly and accurately shows all of the following:

1. The boundaries of the drainage district, as last confirmed by the circuit court or as last revised by the county drainage board under ss. 88.77 to 88.80, Stats.

Note: If the existing boundary of a drainage district is not clearly documented by a circuit court order, or by a county drainage board order under ss. 88.77 to 88.80, Stats., the county drainage board should clarify that boundary by appropriate procedures under ss. 88.77 to 88.80, Stats. See s. ATCP 48.21 (1).

2. The intended alignment and extent of every district drain. If private drains are connected to district drains, the map shall clearly identify which drains, or portions of drains, are district drains.

3. The intended location and width of every district corridor required under s. ATCP 48.24.

(b) The intended cross−section of every district drain. Each vertical section in the cross−section of a district ditch shall include all of the following elements:

1. The intended top and bottom width of the ditch.

2. The intended depth of the ditch.

3. The intended side slope angle of the ditch.

4. Any drainage structures intersected by that vertical section.

Note: The vertical sections comprising the cross−section of a district drain should normally be taken at intervals of not more than 1/3 mile along the entire length of the drain, and at points where structures or changes in drain slope occur.

(c) The grade profile of every district drain. The grade profile of a district ditch shall include all of the following elements:

1. The intended grade elevations of the top and bottom of the ditch.

2. The estimated water surface elevations in the ditch at base flow. The county drainage board shall use a method described in *Appendix A*, or another method approved by the department, to estimate water surface elevations at base flow.

3. The peak water surface elevations in the ditch in the event of a 10−year 24−hour storm event. The county drainage board shall use the method described in *Appendix A*, or another method approved by the department, to estimate peak water surface elevations in the event of a 10−year 24 hour storm event.

Note: The formally established "grade profile" effectively determines drainage access and the depth of drainage provided to landowners. When a county drainage board documents the "grade profile" of a district drain, the county drainage board may also wish to determine the elevations of known points at which private drains empty into that district drain.

(2) NOTICE TO LANDOWNERS; OPPORTUNITY TO OBJECT. Before a county drainage board applies to the department for approval of proposed drainage district specifications required under sub. (1), the county drainage board shall do all of the following:

(a) Mail or deliver, to every known landowner in the drainage district, written notice of the proposed specifications. The notice shall include the proposed specifications or shall explain how the landowner may obtain them. The notice shall also include an announcement of the meeting required under par. (c), including the date, time and place of the meeting.

(b) Publish a class 2 notice, under ch. 985, Stats., of the meeting under par. (c). The notice shall explain the purpose of the meeting, and shall include the meeting date, time and place.

(c) Hold a public meeting to explain and discuss the proposed specifications. The county drainage board shall make the proposed specifications available for public inspection at the meeting.

(d) Give landowners at least 30 days after the public meeting to file, with the county drainage board, written objections to the proposed specifications.

(3) DEPARTMENT APPROVAL. (a) To obtain the department's approval under sub. (1), a county drainage board shall file all of the following with the department:

1. The drainage district specifications for which the county drainage board seeks approval.

2. A description of how the county drainage board established the specifications.

3. Documentation showing that the county drainage board has complied with sub. (2).

4. Notice of every landowner objection filed under sub. (2) (d).

5. The county drainage board's position on every unresolved objection under sub. (2) (d).

6. Other relevant information required by the department.

(b) Within 90 days after a county drainage board files a complete application under par. (a), the department shall approve or disapprove the specifications proposed by the county drainage board. The department may, for good cause, extend the approval deadline to a date specified by the department.

Note: The department will consult with the department of natural resources before approving drainage district specifications proposed by the county drainage board. Among other things, the department will ask the department of natural resources to identify which, if any, drains in the district have a navigable stream history.

(4) FILING APPROVED SPECIFICATIONS. Within 30 days after the county drainage board adopts drainage district specifications under this section, the county drainage board shall file the specifications with the department, the county zoning administrator and the county register of deeds. Specifications are not formally established until they are approved, adopted and filed.

Note: A landowner may challenge formally established drain specifications that violate this chapter or ch. 88, Stats., even if the department has approved those specifications. (In some cases, the department may not be aware of a violation when it approves the specifications.)

(5) DESIGNATING DISTRICT DRAINS. A county drainage board may not, over the objection of any landowner who owns or holds an easement to the land on which a drain is located, designate that drain as a district drain under sub. (1) (a) 2. unless the drainage board does at least one of the following:

(a) Documents that a circuit court has, by order, designated that drain as a district drain.

(b) Documents that the drain has, historically, been operated and maintained as a district drain.

(c) Complies with s. ATCP 48.21 (2).

Note: A drain is not necessarily a "district drain" merely because it is located on land within a drainage district, or merely because it provides drainage for more than one landowner. In some cases, lands within a drainage district are drained by private drains that empty into district drains. Private drains are not operated or maintained by the county drainage board; nor is there any district corridor surrounding a private drain.

Unofficial Text (See Printed Volume). Current through date and Register shown on Title Page.

(6) DRAIN CROSS−SECTION, GRADE PROFILE AND ALIGNMENT. (a) Except as provided in par. (b) or (c), the county drainage board shall adopt under sub. (1) the cross−sections, grade profiles and alignments last confirmed by the circuit court. If a county drainage board is unable to locate court specifications for a drain cross−section, grade profile or alignment, the drainage board may reconstruct those specifications based on physical evidence of historical conditions in the drainage district.

Note: For example, a county drainage board may be able to document a historical grade profile by physical evidence including soil conditions and invert elevations of historical structures along the alignment of the district drain.

(b) A cross−section, grade profile or alignment adopted under sub. (1) shall incorporate changes which the county drainage board, acting within its statutory authority, approved prior to September 1, 1999, except that a grade profile adopted under sub. (1) may not incorporate a change which the drainage board purported to approve prior to September 1, 1999, over the unresolved objection of a landowner whose access to drainage was affected by that change. A grade profile change is deemed to affect a landowner's access to drainage if it impedes gravity flow of water from his or her land, through a real or assumed drain, to any real or assumed outlet at the formally established cross−section and grade profile of the district drain.

(c) A county drainage board may proceed under s. ATCP 48.21 to change or clarify the cross−section, grade profile or alignment of a district drain.

History: Cr. Register, June, 1995, No. 474, eff. 7−1−95; r. and recr. Register, August, 1999, No. 524, eff. 9−1−99.

ATCP 48.21 Changing drainage district specifications. (1) CHANGING A DRAINAGE DISTRICT BOUNDARY. (a) A county drainage board may not change any drainage district boundary except by applicable procedures specified under ss. 88.77 to 88.80, Stats.

Note: If the existing boundary of a drainage district is not clearly documented by a circuit court order, or by a county drainage board order under ss. 88.77 to 88.80, Stats., the county drainage board should clarify that boundary by appropriate procedures under ss. 88.77 to 88.80, Stats.

(b) Whenever a county drainage board changes any drainage district boundary pursuant to ss. 88.77 to 88.80, Stats., the county drainage board shall file a record of the change with the department, the county zoning administrator and the county register of deeds. The record shall include all of the following:

1. A revised map of the drainage district, showing the new boundary.

2. Proof of compliance with par. (a).

(2) DESIGNATING PRIVATE DRAIN AS DISTRICT DRAIN. (a) A county drainage board may not designate a private drain as a district drain unless the county drainage board does at least one of the following:

1. Obtains the written consent of every landowner who owns or holds an easement to land on which the drain is located.

2. Purchases or condemns, pursuant to s. 88.21 (6), Stats., and ch. 32, Stats., all of the land newly required for that district drain and for any district corridor required for that drain under s. ATCP 48.24.

3. Properly designates the drain as a district drain in a proceeding under s. 88.73 or 88.77 to 88.80, Stats.

(b) Whenever a county drainage board designates a private drain as a district drain, the county drainage board shall file a record of that designation with the department, the county zoning administrator and the county register of deeds. The record shall include all of the following:

1. A revised map of the drainage district, showing the designated drain and any district corridor required under s. ATCP 48.24 for that designated drain.

2. Proof of compliance with par. (a).

Note: A drain is not necessarily a "district drain" merely because it is located on land within a drainage district, or merely because it provides drainage for more than one landowner. In some cases, lands within a drainage district are drained by private drains that empty into district drains. Private drains are not operated or maintained by the county drainage board; nor is there any district corridor surrounding a private drain. Under s. ATCP 48.24, a district corridor is required for a "district ditch" but not for other district drains.

(3) CHANGING A FORMALLY ESTABLISHED CROSS−SECTION. (a) A county drainage board may not change the formally established cross−section of a district drain without the department's approval under s. ATCP 48.34.

Note: A "formally established" cross−section is one established by circuit court order, or by county drainage board action under s. ATCP 48.20 or this section. See s. ATCP 48.01 (13r).

(b) Whenever a county drainage board changes the formally established cross−section of a district drain with department approval, the county drainage board shall file a clear record and description of the change with the department, the county zoning administrator and the county register of deeds.

(4) CHANGING A FORMALLY ESTABLISHED ALIGNMENT. (a) A county drainage board may not change the formally established alignment of a district drain unless the county drainage board does all of the following:

1. Obtains the written consent of each owner of land that is newly included in the district corridor because of the realignment, or condemns that newly included land pursuant to s. 88.21 (6), Stats., and ch. 32, Stats. This subdivision does not apply if the realignment brings no new land into the district corridor, or if no district corridor is required under s. ATCP 48.24.

2. Obtains the department's approval under s. ATCP 48.34.

Note: A "formally established" alignment is one established by circuit court order, or by county drainage board action under s. ATCP 48.20 or this section. See s. ATCP 48.01 (13r). Under s. ATCP 48.24, a district corridor is required for a "district ditch" but not for other district drains.

(b) Whenever a county drainage board changes the formally established alignment of a district drain, the county drainage board shall file a record of the change with the department, the county zoning administrator and the county register of deeds. The record shall specifically describe the change, and shall include a new map of the drainage district if the change affects a map previously filed under s. ATCP 48.20 or this section.

(5) CHANGING A FORMALLY ESTABLISHED GRADE PROFILE. (a) A county drainage board may not change the formally established grade profile of a district drain unless the county drainage board does all of the following:

1. Provides, to every landowner in the drainage district whose access to drainage will be affected by the proposed change, a written notice that clearly describes the proposed change and gives the landowner at least 30 days to object. A change is deemed to affect a landowner's access to drainage if it impedes gravity flow of water from his or her land, through a real or assumed drain, to any real or assumed outlet at the formally established cross−section and grade profile of the district drain.

2. Resolves, to the satisfaction of the objecting landowner, every timely objection filed with the county drainage board by a landowner who is entitled to notice under subd. 1.

3. Obtains the department's approval for the proposed change under s. ATCP 48.34.

Note: A "formally established" grade profile is a grade profile established by circuit court order, or by county drainage board action under s. ATCP 48.20 or this section. See s. ATCP 48.01 (13r). The department may not approve a change to a formally established grade profile if any objection by an affected landowner under par. (a) 1. remains unresolved. See ss. ATCP 48.34, 48.36 and 48.38.

(b) Whenever a county drainage board changes the formally established grade profile of a district drain with the department's approval, the county drainage board shall file a record of the change with the department, the county zoning administrator and the county register of deeds. The record shall clearly describe the change, if any, to each element of the grade profile under s. ATCP 48.20 (1) (c).

History: Cr. Register, August, 1999, No. 524, eff. 9−1−99.

Unofficial Text (See Printed Volume). Current through date and Register shown on Title Page.

ATCP 48.22 Construction and maintenance; general. (1) REQUIREMENT. A county drainage board shall design, construct, maintain, repair and restore district drains and corridors in compliance with this subchapter.

(2) COMPLIANCE PLAN. A county drainage board shall file with the department, by December 31, 2001, a plan showing how the county drainage board intends to bring district drains and corridors under its jurisdiction into compliance with this subchapter. The county drainage board shall file a separate plan for each drainage district in the county. The plan shall include all of the following:

(a) A professionally drawn map of the drainage district, showing all district drains. The map shall clearly identify the relevant features of the drainage district, including municipal and other connections to district drains, significant structures such as dams, and the location of existing spoil deposits.

(b) A restoration plan that identifies all of the following:

1. Drain segments that no longer conform to formally established cross−sections, grade profiles or alignments.

2. A priority sequence and schedule for restoring noncomplying drains to their formally established cross−sections, grade profiles and alignments.

3. An estimate of the amount of material to be removed from each drain scheduled for restoration.

4. The intended disposition of removed materials, including the locations at which the materials will be deposited.

5. The projected costs of restoration, and a plan for financing those costs.

(c) A repair and maintenance plan that includes all of the following:

1. A plan for routine maintenance of drainage structures.

2. A plan for maintaining district corridors and controlling woody vegetation in those corridors.

3. A plan for special repair and maintenance projects, if any.

4. The projected costs of repair and maintenance, and a plan for financing those costs.

(d) A plan for controlling soil erosion and runoff in the drainage district. The plan shall include the estimated cost to implement the plan.

(2m) HEARING ON COMPLIANCE PLAN. (a) Before a county drainage board files a compliance plan with the department under sub. (2), the county drainage board shall do all of the following:

1. Provide every known landowner in the drainage district with notice by mail announcing a public meeting at which a copy of the plan shall be available for inspection. The county drainage board shall also publish a class 2 notice of the meeting under ch. 985, Stats.

2. Give landowners at least 30 days after the public meeting to file, with the county drainage board, written objections to the compliance plan.

(b) Whenever a county drainage board files a compliance plan with the department under sub. (2), the county drainage board shall also file all of the following:

1. Documentation showing that the county drainage board has complied with par. (a).

2. Notice of any unresolved objections filed under par. (a) 2., and the county drainage board's position on those unresolved objections.

(2r) COMPLIANCE DEADLINE. A county drainage board shall bring every drainage district into compliance with this subchapter by December 31, 2004 unless the department, in response to unusual or unavoidable circumstances, extends the compliance deadline in writing.

(3) EMPLOYEES AND AGENTS. A county drainage board may employ or contract with qualified persons to survey, design, construct, maintain, repair or restore district drains and corridors on behalf of the county drainage board.

Note: Under s. ATCP 48.36 (1) (f), a construction project must be designed by a qualified engineer. Sections 88.20 and 946.13, Stats., prohibit conflicts of interest by members of a drainage board. Under s. 88.145, Stats., a county drainage board may authorize any owner of land in a drainage district to undertake work approved by the drainage board. The liability of a landowner who does work with the approval of the county drainage board is limited by ss. 88.145, 893.80 and 895.46 (8), Stats.

(4) AUTHORITY TO ENTER LANDS. A member of a county drainage board or an employee or other authorized agent of a county drainage board may do any of the following:

(a) Enter onto any lands in a drainage district in order to survey, design, construct, maintain, repair or restore a district drain or corridor.

(b) Perform survey, construction, maintenance, repair and restoration operations on a district drain or corridor, including operations requiring excavation or modification of private land.

Note: See s. 88.13, Stats.

(5) NOTICE TO LANDOWNER. Before a county drainage board or its agent performs any survey, design, construction, maintenance, repair or restoration operations on private land, other than in a district corridor under s. ATCP 48.24, the county drainage board or its agent shall notify the landowner. Notice may be given in person, by telephone, by mail or, if the landowner is not available, by posting notice at a conspicuous location at an entrance to the land. Notice under this section is adequate if given at any time prior to entry.

(6) CONSTRUCTION PLANS. No county drainage board or its agent may, without the department's written approval, proceed with any construction project or other action under s. ATCP 48.34 for which that approval is required. No county drainage board or its agent may, without the department's written approval, deviate from the project plan and specifications approved by the department.

(7) OTHER AGENCIES; APPROVAL. Before starting any construction, maintenance, repair or restoration operation under this chapter, a county drainage board shall obtain from the appropriate government agencies all permits and approvals required for that operation.

Note: Certain construction, maintenance, repair and restoration operations in a drainage district may require permits or approvals from the army corps of engineers; the Wisconsin department of natural resources; the Wisconsin department of agriculture, trade and consumer protection or local zoning authorities.

History: Cr. Register, June, 1995, No. 474, eff. 7−1−95; r. and recr. (2), cr. (2m) and (2r), am. (6), Register, August, 1999, No. 524, eff. 9−1−99.

ATCP 48.24 District corridors. (1) CORRIDOR REQUIRED. A county drainage board shall establish and maintain a district corridor around every district ditch. The county drainage board shall maintain the district corridor, in compliance with this subchapter, for all of the following purposes:

(a) To provide effective access for the county drainage board and its agents, and for their vehicles and equipment, over the entire length of the district ditch.

(b) To provide a buffer against land uses which may adversely affect water quality in the district ditch.

(2) WIDTH OF CORRIDOR. A district corridor shall extend for 20 feet from the top of the ditch bank on each side of a district ditch. A county drainage board may, by giving specific notice to landowners, establish a wider corridor if necessary to permit vehicle access or to protect water quality in the district ditch.

Note: Under s. ATCP 48.28, a county drainage board is required to control the growth of woody vegetation in a district corridor, except that a county drainage board may allow the growth of woody vegetation in portions of a district corridor if it does not interfere with effective access to district drains.

(3) ACCESS TO CORRIDOR. Except as provided under sub. (4), a member of a county drainage board or an employee or other authorized agent of a county drainage board may, without prior notice to a landowner, do any of the following:

(a) Enter a district corridor, and bring vehicles and equipment into a district corridor, for the purpose of inspecting, surveying,

Unofficial Text (See Printed Volume). Current through date and Register shown on Title Page.

maintaining, repairing, restoring or improving a district drain or corridor.

(b) Perform operations in a district corridor related to the maintenance, repair, restoration or improvement of a district drain or corridor, including cutting, mowing, pesticide application, dredging, excavation and other operations.

(4) NOTICE OF ACTIVITIES IN THE CORRIDOR. Before a county drainage board or its agent does either of the following in a district corridor, the county drainage board or its agent shall notify the landowner by one of the methods specified under s. ATCP 48.22 (5):

(a) Cutting trees that are more than 6 inches in diameter measured at breast height.

(b) Excavating or depositing materials in the district corridor.

(5) ROW CROPPING AND OBSTRUCTIONS IN DISTRICT CORRIDOR. (a) No person may do any of the following without written permission from the county drainage board:

1. Engage in row cropping in a district corridor.

2. Place in a district corridor any building or other obstruction that interferes with the county drainage board's ability to inspect, restore and maintain the district ditch and corridor.

(b) A county drainage board may give a person written permission to engage in activities under par. (a), subject to conditions or limitations which the drainage board specifies in writing.

Note: In deciding whether to authorize row cropping in a district corridor, a county drainage board should consider whether that row cropping will increase maintenance requirements, soil erosion, or movement of suspended solids to district drains. It may consider relevant factors such as the type of row cropping and tillage proposed, the topography of the district corridor, and the type, quality and character of the soil and subsoil in the district corridor.

(c) A person who engages in row cropping or places any obstruction in a district corridor under par. (a), with or without drainage board permission, waives any claim for damages to those crops or obstructions that may be caused by county drainage board activities authorized under ch. 88, Stats., or this chapter.

(d) This subsection does not require a landowner to remove any building or fixture constructed or installed in a district corridor prior to September 1, 1999. The owner of the preexisting building or fixture waives any claim for damages to that building or fixture that may be caused by county drainage board activities authorized under ch. 88, Stats., or this chapter.

Note: See s. ATCP 48.28 related to the control of woody vegetation in a district corridor.

History: Cr. Register, June, 1995, No. 474, eff. 7−1−95; r. and recr. (5), Register, August, 1999, No. 524, eff. 9−1−99.

ATCP 48.26 District drains; design, construction and maintenance. (1) DRAINAGE CAPACITY. Every district drain constructed after July 1, 1995 shall be designed and constructed so that it is capable of removing the volume of water from a 10−year 24−hour rainfall event within 48 hours after that rainfall event. For each county, a 10−year 24−hour rainfall event is the amount of rain shown in table 1 falling in 24 hours.

(2) DITCH STABILITY. (a) A county drainage board shall design and construct every district ditch, including the ditch bed, banks, and related structures such as culverts, bridges and inlets, so that the ditch will remain stable when subjected to a 10−year peak discharge under sub. (1). A district ditch is not required to contain the entire volume of water from the peak discharge. The stability standard under this paragraph does not apply to a district ditch or related structure constructed prior to July 1, 1995.

(b) A county drainage board shall repair and maintain every district ditch, as necessary, to restore and maintain the stability of that ditch.

(3) DISTRICT DRAINS MUST CONFORM TO SPECIFICATIONS. A county drainage board shall restore, repair, maintain and, if necessary, modify district drains so that each district drain conforms to the specifications formally established for that drain by court order, or by county drainage board action under s. ATCP 48.20 or 48.21. If the county drainage board levies any cost assessment for work needed to conform a drain to formally established specifications, it shall levy the assessment according to subchapter II.

(4) REMOVING OBSTRUCTIONS. A county drainage board shall remove sediment dams, windfalls, deadfalls, sand bars, beaver dams and other obstructions from district ditches. The county drainage board shall remove the obstructions annually, or more frequently as necessary. The county drainage board shall also remove submerged vegetation from district ditches as necessary.

(5) RESTORATION PROJECTS; NOTICE TO DEPARTMENT. A county drainage board shall notify the department in writing before the county drainage board initiates any restoration project in a drainage district which involves the removal of more than 3,000 cubic yards of material.

Note: A county drainage board does not need department approval for a restoration project, but may need a dredging permit from the Wisconsin department of natural resources under s. 30.20 or s. 88.31, Stats. A county drainage board may not, under the guise of a "restoration project," dredge below the bottom elevation specified as part of the formally established grade profile. See definition of "restoration project" under s. ATCP 48.01 (21).

History: Cr. Register, June, 1995, No. 474, eff. 7−1−95; r. and recr. (3), cr. (5), Register, August, 1999, No. 524, eff. 9−1−99.

ATCP 48.28 Controlling woody vegetation. (1) REQUIREMENT. Except as provided under sub. (2), a county drainage board shall control the growth of woody vegetation in district ditches and corridors to ensure effective drainage and effective access for inspection, maintenance and repair. A county drainage board may control woody vegetation by one or more of the methods specified under sub. (3).

(2) EXCEPTION. A county drainage board may allow the growth of woody vegetation in portions of a district corridor, provided that the woody vegetation does not interfere with effective access to district drains. A county drainage board, when deciding whether to allow the growth of woody vegetation, shall consider how the woody vegetation may affect the cost of maintaining and cleaning district drains. Any portions of a corridor left in woody vegetation shall be maintained under a resource conservation plan developed in cooperation with the county land conservation department or the United States natural resources conservation service.

Note: In some parts of a district corridor, woody vegetation may have important value as wildlife habitat, or for controlling soil erosion. Ordinarily, ditches are not subject to local shoreland or wetland zoning ordinances. However, in a small number of situations, where ditches are considered natural navigable streams, local ordinances may limit the cutting of woody vegetation. See s. 281.31 (2m), Stats., and chs. NR 115 and 117.

(3) METHODS FOR CONTROLLING WOODY VEGETATION. A county drainage board may use any of the following methods to control the growth of woody vegetation in a district ditch or corridor:

(a) *Mowing.* A county drainage board may mow a district ditch or corridor to control the growth of woody vegetation. Mowing may include hand cutting where necessary. If only mowing is used to control the growth of woody vegetation in a district ditch or corridor, the county drainage board shall mow the ditch or corridor at least once every 5 years, and more often if necessary.

(b) *Pesticide applications.* A county drainage board may apply pesticides to control the growth of woody vegetation in a district ditch or corridor. Pesticides shall be applied according to label directions, and in compliance with ch. ATCP 29 and other applicable state and federal laws and regulations.

(c) *Burning.* Subject to applicable local regulations, a county drainage board may use controlled burning to control the growth of woody vegetation in a district ditch or corridor.

History: Cr. Register, June, 1995, No. 474, eff. 7−1−95.

ATCP 48.30 Controlling soil erosion and runoff. (1) GENERAL. A county drainage board shall take appropriate measures to minimize soil erosion and the movement of suspended solids into district drains. A county drainage board may

Unofficial Text (See Printed Volume). Current through date and Register shown on Title Page.

monitor water in district drains to determine the amounts and sources of suspended solids in the water.

(2) CORRIDORS AND DRAINS. A county drainage board shall design, construct and maintain district drains and corridors to minimize soil erosion and the movement of suspended solids into district drains.

Note: Erosion control methods are described in the "Wisconsin construction site best management practices handbook" which is available for viewing at the county land conservation department, or for purchase from the Wisconsin department of administration, document sale division, 4622 University Avenue, Madison, WI 53705−2156.

(3) VEGETATIVE COVER. (a) A county drainage board shall maintain effective vegetative cover, or equally effective erosion control practices, in every district ditch and corridor. When ditch banks are planted with vegetation to stabilize those banks, the plant variety or seed mixture shall be one of those listed in the United States department of agriculture natural resources conservation service technical guide, critical area planting standard 342, 1985 edition, including supplements through 1988. The application rate shall also conform to critical area planting standard 342. If construction or maintenance activities disturb the vegetative cover in a district ditch or corridor, the drainage board shall promptly replant the disturbed area to restore an effective vegetative cover.

Note: The United States department of agriculture natural resource conservation service technical guide is on file with the department, the secretary of state and the legislative reference bureau. Copies of individual standards may be obtained from the United States department of agriculture natural resources conservation service field offices and from county land conservation department offices.

(b) A county drainage board may permit land uses in district corridors that provide effective vegetative cover and erosion control.

(4) INLETS TO DISTRICT DITCHES. Inlets to district ditches, whether from private or district drains, shall be designed and maintained to prevent soil erosion. Surface drainage entering a district ditch shall be controlled by means of buffer strips, pipe inlets, drop spillways or other devices to prevent soil erosion and uncontrolled flow over ditch banks.

(5) PRIVATE DRAINS. (a) Private drains that transport water to district drains, whether from agricultural or nonagricultural lands, shall be designed, constructed and maintained to prevent soil erosion, and to minimize the movement of suspended solids into district drains. A county drainage board may require that private drains carrying water from nonagricultural lands be designed according to a stormwater management plan, and equipped with facilities such as settling ponds or detention basins to minimize excessive discharges of water or suspended solids into district drains.

(b) If a private drain does not comply with par. (a), the county drainage board may do any of the following:

1. Refuse to permit any connection between the private drain and the district drain.

2. Order that the private drain be modified to comply with par. (a).

3. Order that the private drain be disconnected from the district drain.

4. Pursuant to s. ATCP 48.02 (4), assess the owner of the private drain for construction costs incurred by the drainage district because the private drain does not comply with par. (a).

Note: A county drainage board may also initiate a court action against the owner of the private drain. The county drainage board may ask the court to enjoin violations of par. (a), and may seek recovery of damages incurred by the drainage district because of those violations. A person violating par. (a) may also be subject to a civil forfeiture under s. 88.11 (8), Stats.

(6) EROSION CONTROL PRACTICES ON DRAINED LANDS. (a) An owner of land in a drainage district shall implement appropriate erosion control practices on that land to minimize soil erosion and the movement of suspended solids into district drains. A county drainage board may require a landowner to implement erosion control practices recommended by the United States department of agriculture natural resources conservation service, the county land conservation department or an engineer approved by the department.

(b) If a landowner fails to implement erosion control practices required by a county drainage board under par. (a), the county drainage board may do any of the following:

1. Refuse to permit any connection between the landowner's private drain and the district drain.

2. Order the landowner to comply with par. (a).

3. Order that the landowner's private drain be disconnected from the district drain.

4. Pursuant to s. ATCP 48.02 (4), assess the landowner for construction costs incurred by the drainage district because of the landowner's failure to implement erosion control practices required by the county drainage board under par. (a).

Note: A county drainage board may also initiate a court action against a landowner who violates par. (a). The county drainage board may ask the court to enjoin violations of par. (a), and may seek recovery of damages incurred by the drainage district because of those violations. A landowner violating par. (a) may also be subject to a civil forfeiture under s. 88.11 (8), Stats.

History: Cr. Register, June, 1995, No. 474, eff. 7−1−95.

ATCP 48.32 Deposition of materials. (1) Materials dredged or excavated in connection with the construction, restoration, repair or maintenance of district drains may be spread on land or placed in piles according to this section. Berms, levees and other depositions in a district corridor shall comply with this section.

Note: The deposition of dredged or excavated material may be subject to additional restrictions under federal, state and local laws.

(2) The deposition of excavated materials, whether by land spreading or piling, shall conform as nearly as practicable to the american society of agricultural engineers engineering practice number 407.1, section 5, as reconfirmed in December, 1996.

Note: Copies of ASAE EP 407.1, section 5 are on file with the department and the legislative reference bureau. Copies may be obtained from the department. A county drainage board may also contact the United States department of agriculture natural resources conservation service or the army corps of engineers for technical assistance related to the deposition of removed materials. The department can provide the addresses of these agencies.

(3) If dredged or excavated materials are spread on land, the materials shall be graded and smoothed to blend into cultivated lands. The surface slope of the spread materials shall not exceed a slope of 8:1. Spread materials may not be more than 2 feet deep at the top of a ditch bank.

Note: See Figure 1.

(4) No portion of a pile of dredged or excavated materials may be closer than 12 feet to the top of a ditch bank. Materials shall be piled at a stable angle of repose for those materials. No slope of any pile may exceed a slope of 2:1.

(5) No dredged or excavated material may be placed in a wetland except in compliance with applicable federal, state and local permit requirements.

Note: Figure 1, which is based on ASAE EP 407.01, section 5, illustrates the requirements of this section:

Unofficial Text (See Printed Volume). Current through date and Register shown on Title Page.

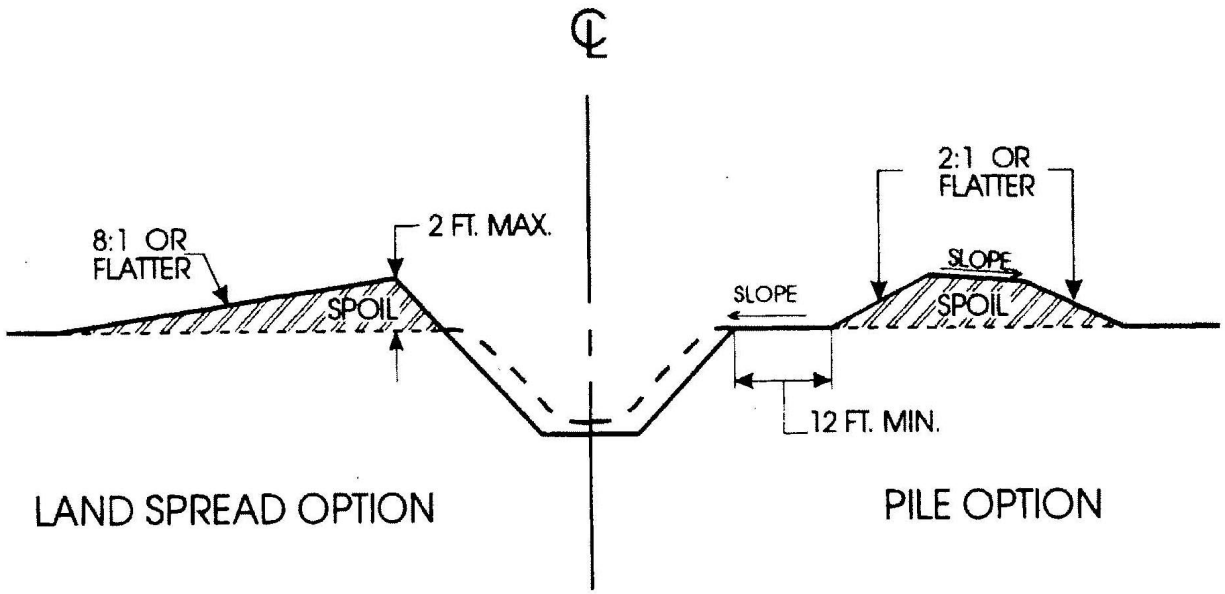

Figure 1. Methods of Material Disposal

History: Cr. Register, June, 1995, No. 474, eff. 7−1−95; am. (2), Register, August, 1999, No. 524, eff. 9−1−99.

ATCP 48.33 Structures impeding drainage. (1) PROHIBITION. Except as provided in sub. (2), no county drainage board may install or modify any structure in a district drain, or approve the installation or modification of any structure in a district drain, if the installation or modification causes or aggravates a deviation from the formally established grade profile of that district drain. An installation or modification is rebuttably presumed to cause or aggravate a deviation from the formally established grade profile if it raises the water level in a district drain, or slows the runoff of water from upstream lands in the drainage district.

Note: A "formally established" grade profile is a grade profile established by court order, or by the county drainage board under s. ATCP 48.20 or 48.21. A person installing or modifying a structure in a district drain may also need a permit from the state of Wisconsin department of natural resources if the district drain has a navigable stream history. See ss. 30.12, 30.18 (2), 30.20, 31.02, 88.31 and 88.62 (3), Stats. See also ch. 31, Stats.

(2) TEMPORARY MODIFICATIONS. Subsection (1) does not apply to any of the following which the county drainage board undertakes or approves:

(a) A temporary structure or modification that is reasonably necessary to protect the public health, safety or welfare in an emergency.

(b) A temporary structure or modification that is necessary for other lawful construction or maintenance operations under this chapter.

(c) A temporary structure or modification to provide essential crop irrigation during a drought if all of the following apply:

1. The county drainage board gives written notice of the proposed structure or modification to every upstream landowner whose access to drainage [will] be affected. A structure or modification is deemed to affect a landowner's access to drainage if it impedes gravity flow of water from his or her land, through a real or assumed drain, to any real or assumed outlet at the formally established cross−section and grade profile of the district drain.

Note: A missing word is shown in brackets.

2. The county drainage board resolves, to the satisfaction of the objecting landowner, every objection by an upstream landowner who is entitled to notice under subd. 1.

Note: For example, a county drainage board may resolve a landowner's objection, to the satisfaction of a landowner, by imposing conditions under subd. 3 which protect the interests of that landowner.

3. The county drainage board approves the structure or modification subject to written conditions that reasonably protect the public interest and the interests of all landowners in the drainage district.

Note: A landowner withdrawing water for irrigation may need to obtain a permit from the state of Wisconsin department of natural resources under s. 30.18 (2) (a) 2., Stats.

(d) A temporary structure or modification to provide water for cranberry harvest, or for cranberry winter ice cover, if all of the following apply:

1. The structure or modification is installed for not more than 14 days for cranberry harvest, and not more than 14 days for cranberry winter ice cover. The county drainage board may, for good cause, extend a 14−day period for up to 7 more days at the request of a cranberry grower.

2. The county drainage board gives written notice of the proposed structure or modification to every upstream landowner whose access to drainage will be affected. A structure or modification is deemed to affect a landowner's access to drainage if it impedes gravity flow of water from his or her land, through a real or assumed drain, to any real or assumed outlet at the formally established cross−section and grade profile of the district drain.

3. The county drainage board resolves, to the satisfaction of the objecting landowner, every objection by an upstream landowner who is entitled to notice under subd. 2.

4. The county drainage board approves the structure or modification subject to written conditions that reasonably protect the public interest and the interests of all landowners in the drainage district.

Note: A county drainage board may not authorize a cranberry grower to install a temporary structure under par. (d) for more than 14 days, except that the board may extend a 14−day authorization for up to 7 more days in response to a separate applica-

Unofficial Text (See Printed Volume). Current through date and Register shown on Title Page.

tion from the cranberry grower under par. (d) 1. An authorization under par. (d) does not extend from season to season, or from year to year.

A county drainage board might be able to resolve a landowner's objection under par. (d) 3., to the satisfaction of a landowner, by imposing conditions under par. (d) 4. which protect the interests of that landowner.

History: Cr. Register, August, 1999, No. 524, eff. 9−1−99.

Subchapter V — Construction Projects and Drainage Alterations; Department Approval

ATCP 48.34 Construction projects and drainage alterations; department approval required. (1) REQUIREMENT. Except as provided in sub. (2), a county drainage board may not do any of the following without the department's written approval:

(a) Construct or modify any district drain, or authorize any person to construct or modify a district drain.

(b) Install or modify any structure in a district drain, or authorize any person to install or modify any structure in a district drain.

(c) Authorize any person to connect a private drain to a district drain.

(d) Take any action under s. ATCP 48.20 or 48.21 that changes the formally established cross−section, grade profile or alignment of a district drain, regardless of whether that action involves any physical alteration to a district drain or structure.

(2) EXEMPTIONS. Subsection (1) does not apply to any of the following:

(a) Actions, such as routine maintenance or repair projects, that do not cause or aggravate any deviation from the formally established cross−section, grade profile or alignment of a district drain. An action is rebuttably presumed to cause or aggravate a deviation from a formally established grade profile if it raises the water level in a district drain or slows the runoff of water from lands in the drainage district.

(b) Restoration projects.

Note: A restoration project is exempt under par. (b) only to the extent that it is confined within the formally established cross−section, grade profile and alignment of a district drain, and does not go beyond those formally established specifications. See definition of "restoration project" under s. ATCP 48.01 (21).

(c) Temporary structures or modifications that a county drainage board installs or approves in compliance with s. ATCP 48.33 (2).

Note: A county drainage board should consult with the department to determine whether a particular county drainage board action requires department approval under this section. A county drainage board may seek the department's advice or assistance regarding any proposed construction, repair, restoration or maintenance action, regardless of whether the action requires the department's approval under this section. A county drainage board should consult with the department at the early planning stage to facilitate timely assistance and, if necessary, timely approval. A county drainage board may not deviate from approved project specifications without the department's approval.

A person may need to obtain a permit from the state of Wisconsin department of natural resources before undertaking a construction or restoration project in a district drain which has a navigable stream history. See ss. 30.12, 30.18 (2), 30.20, 31.02, 88.31 and 88.62 (3), Stats. See also ch. 31, Stats.

History: Cr. Register, June, 1995, No. 474, eff. 7−1−95; r. and recr. Register, August, 1999, No. 524, eff. 9−1−99.

ATCP 48.36 Applying for approval. (1) APPLICATION REQUIRED. A county drainage board shall apply in writing for department approval of a proposed action under s. ATCP 48.34. The application shall include all of the following information, in detail commensurate with the proposed action:

(a) *District name or number.* The name or number, or proposed name or number, of the drainage district.

(b) *Proposed action.* A statement describing the proposed action.

(c) *Objectives.* The objectives which the county drainage board expects to achieve by taking the proposed action. If the county drainage board expects to improve drainage, the county drainage board shall express its drainage objectives in terms of drainage volume, thoroughness of drainage, geographic scope of drainage, or other pertinent drainage measures.

(d) *Persons requesting action.* The persons, if any, who are asking the county drainage board to take the proposed action.

(e) *Estimated cost.* The estimated cost of the proposed action, including any damage awards to landowners who will be adversely affected.

(f) *Design specifications.* Design specifications for the proposed action, prepared by an engineer who is qualified under s. 88.21 (5), Stats. The design specifications shall comply with applicable standards under subch. IV. The engineer preparing the design specifications shall state whether, in the engineer's judgment, the proposed action as designed will be effective in achieving the county drainage board's stated objectives.

(g) *Lands and waters affected.* A map showing the location of the proposed action, and the location of the lands and waters affected by the proposed action. The map shall indicate all of the following if relevant:

1. The current and proposed use of the affected lands.

2. The topography of the affected lands.

3. The location of any affected wetlands.

4. The identity and location of any affected navigable waterway, stormwater management district, lake district, priority watershed or lake under s. 281.65, Stats., or wellhead protection area under ch. NR 811.

5. The identity and location of any affected building, transportation corridor or utility easement.

(h) *Hydrology analysis.* A hydrology analysis, prepared by an engineer who is qualified under s. 88.21 (5), Stats. The hydrology analysis shall analyze the effect of the proposed action, if any, on all of the following:

1. Water surface elevations in district drains at base flow. The hydrology analysis shall use a method described in *Appendix A*, or another method approved by the department, to estimate water surface elevations at base flow.

2. Peak water surface elevations in district drains in the event of a 10−year 24−hour storm event. The hydrology analysis shall use the method described in *Appendix A*, or another method approved by the department, to estimate peak water surface elevations in the event of a 10−year 24−hour storm event.

3. Peak water surface elevations in district drains in the event of a 25−year 24−hour storm event. The hydrology analysis shall use the method described in *Appendix A*, or another method approved by the department, to estimate peak water surface elevations in the event of a 25−year 24−hour storm event.

(i) *Construction plan.* A construction plan, if applicable, including all of the following:

1. A plan for controlling construction site erosion.

2. The estimated amount of material, if any, that will be removed.

3. A plan for depositing removed material, if any, including the location and configuration of any deposits.

(j) *Notice and public hearing.* A statement that the county drainage board has complied with the notice and public hearing requirement under sub. (2).

(k) *Formal changes to cross−section, grade profile or alignment.* All of the following information if the county drainage board proposes to change the formally established cross−section, grade profile or alignment of a district drain:

1. The cross−section, grade profile or alignment which the county drainage board proposes to change.

2. The new cross−section, grade profile or alignment proposed by the county drainage board. The new specifications shall be prepared by an engineer who is qualified under s. 88.21 (5), Stats.

3. If the county drainage board proposes to change a formally established alignment, a statement that the county drainage board has complied with s. ATCP 48.21 (4) (a) 1.

Unofficial Text (See Printed Volume). Current through date and Register shown on Title Page.

4. If the county drainage board proposes to change a formally established grade profile, a statement that the county drainage board has complied with s. ATCP 48.21 (5) (a) 1. and 2.

(L) *Assessment of benefits to landowners.* A statement explaining how the proposed action will affect the assessment of benefits to landowners under s. ATCP 48.06, if at all.

Note: See s. ATCP 48.06 (2) (a) and s. 88.46, Stats.

(m) *Financing plan.* The drainage board's plan for financing the proposed action, including any proposed cost assessments to lands in the drainage district.

Note: See s. ATCP 48.02.

(n) *Environmental effects.* An assessment of how the proposed action may affect the human and natural environment, including effects on all of the following:

1. Lands and land uses identified under par. (g).
2. Surface water levels, quality and temperature.
3. Groundwater levels and quality.

(o) *Alternatives.* An assessment of alternatives to the proposed action, including the alternative of doing nothing. The assessment shall discuss the relative benefits, costs and environmental effects of the alternatives.

(2) COUNTY DRAINAGE BOARD; NOTICE AND HEARING ON PROPOSED ACTION. Before a county drainage board submits an application to the department under sub. (1), it shall do all of the following:

(a) Publish a hearing notice and hold a public hearing on the proposed action. The notice and hearing shall comply with applicable requirements under s. 88.05 and 88.065, Stats. The hearing notice shall clearly describe the proposed action.

(b) Give members of the public at least 30 days, following the public hearing under par. (a), to comment on the proposed action.

(3) COPIES FILED WITH OTHER AGENCIES. Whenever a county drainage board files an application with the department under sub. (1), the county drainage board shall simultaneously file copies of the application with all of the following:

(a) The Wisconsin department of natural resources.

(b) The United States army corps of engineers.

(c) The county zoning administrator.

(d) The county land conservation committee.

(e) Every municipality affected by the proposed action.

(f) The county highway committee if the proposed action may affect a public highway.

(4) ADDITIONAL INFORMATION. The department may require a county drainage board to file additional information, as necessary, before approving or disapproving an application under sub. (1).

History: Cr. Register, June, 1995, No. 474, eff. 7−1−95; r. and recr. Register, August, 1999, No. 524, eff. 9−1−99; correction in (1) (g) 4. made under s. 13.93 (2m) (b) 7., Stats., Register January, 2002 No. 553.

ATCP 48.38 Department approval or disapproval. (1) APPROVING DRAINAGE ALTERATIONS. The department may approve, disapprove, or conditionally approve an action under s. ATCP 48.34. The department may not approve any action under s. ATCP 48.34 that causes the cross−section, grade profile or alignment of a district drain to deviate from the cross−section, grade profile or alignment formally established for that drain, but may do any of the following based on the county drainage board's application under s. ATCP 48.36:

(a) Approve an action that formally reestablishes the cross−section of a district drain.

(b) Approve an action that formally reestablishes the alignment of a district drain if the department finds that the county drainage board has complied with applicable requirements under s. ATCP 48.21 (4) (a) 1.

(c) Approve an action that formally reestablishes the grade profile of a district drain if the department finds that the county drainage board has complied with s. ATCP 48.21 (5) (a) 1. and 2.

(2) DEADLINE FOR APPROVAL OR DISAPPROVAL. Within 45 days after a county drainage board files a complete application under s. ATCP 48.36, including any additional information which the department requests under s. ATCP 48.36 (4), the department shall issue a written notice approving or disapproving the county drainage board's proposed action under s. ATCP 48.34. The department may, for good cause, extend the deadline to a date specified by the department.

Note: See also ss. 88.32 (3m) and 88.35 (7), Stats.

(3) CONDITIONAL APPROVAL. The department may approve a proposed action under s. ATCP 48.34 subject to conditions specified by the department.

(4) REASONS FOR DISAPPROVAL. If the department disapproves a proposed action under s. ATCP 48.34, the department shall give the county drainage board written notice of the reasons. The department may disapprove a proposed action for any of the following reasons:

(a) The county drainage board has failed to provide information required under s. ATCP 48.36.

(b) The proposed action would violate this chapter or ch. 88, Stats.

(c) The requested approval would violate this chapter or ch. 88, Stats.

(d) The proposed action is not technically feasible, is not technically sound, or is not adequately designed to achieve the county drainage board's stated objectives.

(e) The proposed action will have a substantial adverse effect on water quality, or on the human or natural environment.

(5) ENVIRONMENTAL ASSESSMENT. The department shall prepare an environmental assessment under s. ATCP 3.02 before it approves a proposed action under s. ATCP 48.34 if any of the following apply:

(a) The proposed action will drain more than 200 acres of land not previously drained, or will substantially alter drainage from more than 200 acres of land.

(b) The proposed action will drain more than 5 acres of wetlands.

(c) The proposed action involves the construction or modification of a dam in a drain with a navigable stream history.

(d) The proposed action involves a cold water fishery in a district drain with a navigable stream history.

(e) The proposed action will substantially affect the base flow in surface waters of the state.

(f) The department determines that an environmental assessment is needed to determine whether an environmental impact statement is required under s. ATCP 3.03.

(6) ENVIRONMENTAL IMPACT STATEMENT. The department shall prepare an environmental impact statement under s. ATCP 3.03 before approving a proposed action under s. ATCP 48.34 only if the department determines that an environmental impact statement is required under s. ATCP 3.03.

History: Cr. Register, June, 1995, No. 474, eff. 7−1−95; r. and recr. Register, August, 1999, No. 524, eff. 9−1−99.

Subchapter VI — Landowner Rights and Responsibilities

ATCP 48.40 Notice of landowner actions affecting drainage district. (1) REQUIREMENT. A landowner under sub. (2), including the state of Wisconsin or any county, town, village or city, shall notify the county drainage board before undertaking any action, including any change in land use, that will do any of the following:

(a) Alter the flow of water into or from a district drain.

(b) Increase the amount of soil erosion, or the movement of suspended solids to a district drain.

(c) Affect the operation of the drainage district, or the costs incurred by the drainage district.

Unofficial Text (See Printed Volume). Current through date and Register shown on Title Page.

(2) APPLICATION. Subsection (1) applies to an owner of land that receives water from or discharges water to a drainage district, regardless of whether the land is included in the drainage district.

Note: A county drainage board may take various actions in response to landowner actions that adversely affect a drainage district. For example, see ss. ATCP 48.02 (5), 48.04, 48.06 (2), 48.30 and 48.44 (3). See also ss. 88.89 to 88.92, Stats.

History: Cr. Register, June, 1995, No. 474, eff. 7−1−95.

ATCP 48.42 Removing lands from drainage district. No landowner, including the state of Wisconsin or any county, town, village or city, may do either of the following:

(1) Remove lands from inclusion in a drainage district without obtaining the approval of the county drainage board under s. 88.80, Stats.

(2) Disconnect a private drain from a district drain, except with the approval of the county drainage board.

History: Cr. Register, June, 1995, No. 474, eff. 7−1−95.

ATCP 48.43 Connecting private drains to district drains; extending private drains. No person may do either of the following without written approval from the county drainage board:

(1) Connect a private drain to a district drain.

(2) Extend a private drain that is currently connected to a district drain.

Note: Under s. 88.92 (1), Stats., a county drainage board may approve the connection of private drains to district drains, or the extension of private drains from district drains, and may establish conditions for approval. Under s. 88.92 (2), Stats., a person who connects or extends a private drain, or removes a spoil pile, without drainage board approval is liable for damages incurred by the drainage district as a result of that action. "Damages" include payments that the drainage district would have received during the time that the illegal connection or extension existed if the territory drained by the illegal connection or extension had been subject to assessment.

History: Cr. Register, June, 1995, No. 474, eff. 7−1−95; renum. from ATCP 48.44, Register, August, 1999, No. 524, eff. 9−1−99.

ATCP 48.44 Obstructing or altering district drains. **(1)** PROHIBITION. Except as provided under sub. (2), no person may obstruct or alter a district drain without prior written approval from the county drainage board.

(2) WITHDRAWING WATER; EXEMPTION. An owner of land adjacent to a district drain may, without prior approval from the county drainage board, withdraw water from a district drain and place an obstruction in the district drain for that purpose while withdrawing that water if all of the following apply:

(a) The landowner notifies the county drainage board under s. ATCP 48.40 before withdrawing the water or placing the obstruction in the district drain.

(b) The landowner obtains a permit from the department of natural resources authorizing the withdrawal, if a permit is required under s. 30.18 (2) (a) 2., Stats.

(c) The obstruction does not elevate the water surface elevation in the district drain, at the point of the obstruction, above the base flow elevation specified as part of the formally established grade profile for that district drain.

(d) Neither the obstruction nor the withdrawal of water reduces the base flow, in a district drain that has a navigable stream history, below the minimum base flow which the state of Wisconsin department of natural resources has established for that district drain under s. 88.31, Stats..

Note: A "formally established" grade profile is a grade profile established by court order, or by the county drainage board under s. ATCP 48.20 or 48.21. A violation of par. (c) "materially defeats the purposes of drainage" within the meaning of s. 88.93, Stats.

(e) The withdrawal does not injure any district drain, or make any district drain more susceptible to injury. Injury to a district drain includes, for purposes of this paragraph, any of the following:

1. Damage to any structure in a district drain.

2. The deposition of excavated materials in a district drain.

3. The weakening, undercutting or accelerated erosion of any side bank in a district drain.

(3) DRAINAGE BOARD MAY REVIEW. A county drainage board may do any of the following:

(a) Require a landowner to provide information showing that the landowner's withdrawal of water complies with sub. (2).

(b) Prohibit a landowner from withdrawing water under sub. (2) if the drainage board reasonably concludes that the withdrawal violates this chapter. The drainage board shall document, in writing, the basis for its conclusion.

History: Cr. Register, August, 1999, No. 524, eff. 9−1−99.

ATCP 48.45 Landowner rights. **(1)** ACTION TO ENFORCE COMPLIANCE. (a) An owner of land in a drainage district may file a written petition with the county drainage board asking the county drainage board to do any of the following:

1. Restore, repair, maintain or, if necessary, modify a district drain in order to conform the drain to the cross−section, alignment or grade profile formally established for that drain.

Note: Drain specifications are formally established by court order, or by drainage board action under s. ATCP 48.20 or 48.21. Deviations from formally established specifications may effectively deprive landowners of drainage to which they are legally entitled.

2. Remove an obstruction placed in a district drain in violation of this chapter or ch. 88, Stats.

3. Correct a violation of this chapter or ch. 88, Stats.

(b) A petition under par. (a) shall identify the grounds for the petition and the action requested of the county drainage board. A county drainage board may require the petitioner to provide further information which is reasonably necessary in order for the board to properly evaluate the petition.

(c) Within 60 days after a landowner files a complete petition with the county drainage board, the county drainage board shall provide the landowner with a written response that does all of the following:

1. Describes and explains the action, if any, which the county drainage board will take in response to the petition.

2. Explains the county drainage board's refusal to take action on the petition, if the county drainage board refuses to take action.

(d) A petitioner under par. (a) may, after receiving a county drainage board's response under par. (c), file a written petition with the department alleging that a county drainage board has violated this chapter or ch. 88, Stats. The department may conduct an investigation to determine whether the county drainage board has violated this chapter or ch. 88, Stats. If the department finds that a county drainage board has violated this chapter or ch. 88, Stats., the department shall issue an order under s. ATCP 48.52 which directs the county drainage board to correct the violation.

Note: The remedies provided to a landowner under sub. (1) are in addition to any other legal remedies which may be available to the landowner. A landowner is not required to pursue any of the remedies under sub. (1) before pursuing other legal remedies. A landowner may challenge a county drainage board action that violates this chapter or ch. 88, Stats., even if the department has approved that action. (In some cases, the department may not be aware of facts constituting a violation when it approves a county drainage board action.)

(2) LAND OWNERSHIP CHANGE. A change of ownership does not relieve or deprive a succeeding landowner of rights or responsibilities that run with the land under ch. 88, Stats., or this chapter.

History: Cr. Register, August, 1999, No. 524, eff. 9−1−99.

Subchapter VII — Drainage District Records and Financial Management

ATCP 48.46 Records required. **(1)** ORDERS. A county drainage board secretary and the county zoning administrator shall maintain in perpetuity a copy of every order of the circuit court or the county drainage board that does any of the following:

(a) Creates, modifies, suspends or dissolves a drainage district. The record shall include maps or descriptions showing the district boundaries affected by the order.

(b) Approves the construction, enlargement, extension or modification of a district drain. The record shall include any

Unofficial Text (See Printed Volume). Current through date and Register shown on Title Page.

information describing cross−sections, grade profiles and alignments of drains affected by the order.

(c) Confirms or orders an assessment, supplemental assessment or reassessment of benefits, damages or costs to landowners in a drainage district.

Note: Under s. 88.19 (4) to (7), Stats., the department may determine the records required to be preserved regarding drainage districts.

(d) Formally establishes any drainage district specifications under s. ATCP 48.20 or 48.21.

(2) DRAINAGE DISTRICT SPECIFICATIONS. A county drainage board shall have on file, at all times, drainage district specifications established by court order, or by the county drainage board under s. ATCP 48.20 or 48.21. Specifications shall include all existing specifications designating any of the following:

(a) Drainage district boundaries, district drains and district corridors.

(b) Cross−sections, alignments and grade profiles of district drains.

(4) REPORTS. A county drainage board secretary shall keep, for at least 10 years, a copy of every inspection report filed with the department under subchapter III, and every annual report filed with the county zoning administrator under s. 88.24, Stats. A county zoning administrator shall keep, for at least 10 years, a copy of every annual report filed under s. 88.24, Stats.

(5) MINUTES OF MEETINGS. A county drainage board secretary shall prepare minutes of the following meetings, and shall keep those minutes for at least 10 years:

(a) Every meeting of the county drainage board.

(b) Every meeting of district landowners held under the auspices of the county drainage board.

Note: Under county law or policy, a county drainage board may be required to retain the minutes of meetings for more than 10 years.

(6) CONSTRUCTION AND RESTORATION RECORDS. A county drainage board secretary shall keep a copy of every request for approval filed with the department under s. ATCP 48.36, and every approval or disapproval issued by the department under s. ATCP 48.38. Records under this subsection pertaining to each drainage district shall be retained for at least the life of that drainage district.

History: Cr. Register, June, 1995, No. 474, eff. 7−1−95; am. (1) (b), cr. (1) (d), r. and recr. (2), r. (3), Register, August, 1999, No. 524, eff. 9−1−99.

ATCP 48.48 Care and inspection of records. (1) RECORDS ORGANIZED AND ACCESSIBLE. Records required under s. ATCP 48.46 shall be organized by drainage district, and shall be readily accessible for inspection.

(2) DESTRUCTION OF RECORDS; NOTICE. A county drainage board shall notify the department and the state historical society in writing at least 60 days before the county drainage board destroys any record identified under s. ATCP 48.46. The department or the state historical society may take custody of any records proposed for destruction.

Note: See s. 88.19 (4) (d), Stats.

(3) DEPARTMENT MAY INSPECT RECORDS AND OBTAIN COPIES. The department may inspect and copy any drainage district record kept by a county drainage board, or by any person in this state, including any record required under s. ATCP 48.46. A county drainage board shall, at the department's request, allow the department to copy any drainage record kept by a county drainage board, including any record kept under s. ATCP 48.46. The department shall retain a copy of any record obtained under this subsection and shall deliver a copy to the county zoning administrator.

Note: See s. 88.19 (5), Stats.

(4) FILING RECORDS WITH DEPARTMENT AND COUNTY ZONING ADMINISTRATOR. The secretary of the county drainage board shall provide a copy of drainage board records under s. ATCP 48.46 (1) to (4) that are created after July 1, 1995 to the department and the county zoning administrator.

Note: See s. 88.19 (5) to (7), Stats.

History: Cr. Register, June, 1995, No. 474, eff. 7−1−95.

Subchapter VIII — Enforcement and Variances

Note: In addition to any other remedy specified under this chapter, the department may bring an action to recover a civil forfeiture under s. 88.11 (8), Stats., from any person who violates this chapter.

ATCP 48.49 Financial management. (1) COUNTY TREASURER. (a) Except as provided in sub. (2), the county treasurer shall serve as the county drainage board treasurer pursuant to s. 88.18, Stats. The county treasurer shall comply with applicable requirements under ch. 88, Stats., and this chapter.

(b) If the county treasurer serves as the county drainage board treasurer, the county treasurer may retain for the benefit of the county a portion of the interest received on drainage district funds held by the county treasurer, to cover county costs identified under s. 88.18 (1), Stats. The county treasurer may not retain an amount that exceeds the amount authorized under s. 88.18 (1), Stats.

Note: Section 88.18 (1), Stats., authorizes the county treasurer to deduct the following county costs from the interest received on drainage district funds:

The county treasurer's cost to provide services to the county drainage board.

The county zoning administrator's cost to maintain and provide copies of drainage board records under s. 88.19, Stats.

(2) APPOINTED TREASURER. (a) A county drainage board may appoint its own treasurer, pursuant to s. 88.18 (3), Stats. The appointed county drainage board treasurer shall act as the deputy of the county treasurer. The county drainage board may assign any or all of the county treasurer's duties under this section to the appointed county drainage board treasurer. The appointed treasurer shall comply with applicable requirements under ch. 88, Stats., and this chapter.

(b) If the county drainage board appoints its own treasurer under par. (a), the county drainage board shall:

1. Specify the treasurer's compensation in writing. Compensation shall include reimbursement of the treasurer's actual and reasonable expenses, as provided in s. 88.18 (3), Stats.

2. Require the treasurer to file a bond as provided in s. 88.18 (3), Stats.

(c) If the county drainage board appoints its own treasurer under par. (a), the county drainage board shall enter into a written agreement with the appointed treasurer and the county treasurer. The agreement shall do all the following:

1. Identify the duties under this section that the county drainage board has assigned to the appointed treasurer.

2. Identify the duties under this section, if any, that remain with the county treasurer.

(3) COUNTY DRAINAGE BOARD ACCOUNTS. The county drainage board treasurer shall keep county drainage board accounts. The treasurer shall keep a separate account for each drainage district as required by s. 88.18 (2), Stats.

(4) DEPOSITS. The county drainage board treasurer shall deposit, to the appropriate account under sub. (3), all funds received on behalf of the county drainage board or any drainage district. A person who receives funds on behalf of the county drainage board or any drainage district shall promptly deposit those funds with the county drainage board treasurer.

(5) EXPENDITURES. (a) No person may make any expenditure from a county drainage board account under sub. (3) unless the county drainage board treasurer signs the draft or specifically approves the expenditure in writing.

(b) Except as provided in sub. (1) (b), the county drainage board treasurer may not approve any expenditure under par. (a) unless the county drainage board also approves that expenditure in writing.

(6) ACCOUNTING RECORDS. A county drainage board treasurer shall keep complete and accurate accounting records, and sup-

Unofficial Text (See Printed Volume). Current through date and Register shown on Title Page.

porting documentation, for county drainage board accounts under sub. (3). Records shall include all the following:

(a) Records of all receipts and deposits. Records shall identify the nature, source and amount of each receipt and deposit.

(b) Records of all expenditure authorizations and expenditures. Records shall identify the purpose, recipient and amount of each expenditure.

(c) Current account balances.

(d) Monthly and annual reports summarizing revenues and expenditures during the reporting period, and account balances at the beginning and end of the reporting period.

(e) A copy of every grant contract under s. ATCP 48.60 (5).

(7) RECORDS KEPT AS PUBLIC RECORDS. The county drainage board treasurer shall do all the following:

(a) Keep the records under sub. (6) as county public records. Except as provided in ch. 88, Stats., or this chapter, the county drainage board treasurer shall treat the records as the county treasurer would treat comparable county accounting records for retention and disposal purposes.

(b) Keep the records under sub. (6) in the office of the county treasurer, or in another place that the county treasurer approves in writing.

(c) Make the records under sub. (6) available for public inspection and copying, as provided in subch. II of chapter 19, Stats.

(8) CONTROL AND AUDIT. The county drainage board treasurer shall do all the following:

(a) Exercise sound fiscal control over funds received, to prevent misappropriation or misdirection of funds.

(b) Account for all funds received and expended.

(c) File periodic accountings with the county drainage board, as requested by the board.

(d) Make records and accounts available, upon request, for audit by the state of Wisconsin, the county drainage board or the county.

History: CR 01−004: cr. Register January 2002 No. 553, eff. 2−1−02.

ATCP 48.50 Investigations. The department may investigate violations of this chapter. The department may conduct a preliminary investigation under s. 93.16, Stats., and may exercise its authority under ss. 93.14 and 93.15, Stats., in support of any investigation. Pursuant to ss. 88.13 and 93.08, Stats., the department or its agent may enter onto lands to inspect for compliance with this chapter.

History: Cr. Register, June, 1995, No. 474, eff. 7−1−95.

ATCP 48.52 Compliance orders. (1) AUTHORITY. The department may, without prior notice or hearing, issue an order which does any of the following:

(a) Prohibits the construction or modification of a district drain or corridor if the department finds that the construction or modification violates this chapter. An order under this paragraph shall specify the activity prohibited by the order, and shall specify why that activity violates this chapter.

(b) Requires a county drainage board to file with the department a specific maintenance and repair plan for a drainage district.

(c) Requires a county drainage board to file with the department a copy of any record or report required under this chapter.

(d) Requires a county drainage board to comply with applicable requirements under this chapter.

Note: See s. 88.11 (6) and (7), Stats.

(2) WHO MAY ISSUE. An order under sub. (1) may be issued by the administrator of the department's division of agricultural resource management, or by a person designated in writing by that division administrator.

(3) VIOLATIONS PROHIBITED. No person may violate an order issued by the department under sub. (1).

(4) FORM AND CONTENTS. An order under sub. (1) shall be issued in writing, and shall include all of the following:

(a) The name or number of the drainage district.

(b) The name of the person to whom the order is issued.

(c) Notice that persons adversely affected by the order may request a hearing to contest the order, or to demonstrate compliance with conditions specified for withdrawal of the order.

(5) SERVING THE ORDER. (a) An order under sub. (1) shall be served on the person to whom it is directed. An order may be served in person or by mail. If an order is directed to the county drainage board, the department shall serve the order on at least one member of the county drainage board. The department shall mail or deliver a copy of every order under sub. (1) to the county drainage board, regardless of whether the order is directed to the county drainage board.

Note: Any person, including but not limited to the county sheriff, may personally serve an order on behalf of the department. If necessary, the department may prove service by means of an affidavit of mailing, a certified mail return receipt, or an affidavit of service.

(b) An order under sub. (1) takes effect immediately after it is served on the person to whom it is directed.

(6) WITHDRAWING OR MODIFYING THE ORDER. A person adversely affected by an order under sub. (1) may request the department to withdraw or modify the order. A request under this subsection shall specify the reasons justifying the request. A request may be made orally, but the department may require the requester to confirm the request in writing. The department may withdraw or modify the order as appropriate.

History: Cr. Register, June, 1995, No. 474, eff. 7−1−95.

ATCP 48.54 Hearing on compliance order. (1) REQUEST FOR HEARING. A person adversely affected by an order under s. ATCP 48.52 may request a hearing before the department to contest the order. A request may be made orally, but the department may require the requester to confirm the request in writing. A request for hearing does not automatically stay an order issued under s. ATCP 48.52.

(2) INFORMAL HEARING. (a) The department shall hold an informal hearing as soon as reasonably possible after it receives an oral or written hearing request under sub. (1), but not more than 10 days after it receives the request, unless the requester agrees to a later date for an informal hearing.

(b) The person presiding at an informal hearing under par. (a) shall be a department employee or official who was not personally involved in the investigation or decision to issue the order under s. ATCP 48.52, and who is authorized to withdraw or modify the order as necessary. The informal hearing shall be held by telephone or at a location determined by the department.

(c) Within 2 business days after the conclusion of the informal hearing, the presiding officer under par. (b) shall issue a brief written memorandum which summarizes the informal hearing, and any decision or action resulting from the informal hearing. A copy of the memorandum shall be provided to the person requesting the hearing. The memorandum shall include a notice of a person's right to request a formal contested case hearing under sub. (3).

(3) FORMAL HEARING. If a contest related to an order under s. ATCP 48.52 is not resolved after an informal hearing under sub. (2), the person adversely affected by the department's order may request a full contested case hearing on the order. The contested case proceeding shall comply with ch. 227, Stats., and ch. ATCP 1.

History: Cr. Register, June, 1995, No. 474, eff. 7−1−95.

ATCP 48.56 Variances. The department may authorize a variance from any standard or requirement under this chapter if the department finds that the variance is consistent with the objectives of this chapter. A variance shall be issued in writing. A variance may be issued by the administrator of the department's division of agricultural resource management, or by a person

Unofficial Text (See Printed Volume). Current through date and Register shown on Title Page.

designated in writing by that division administrator. The department may not grant variances from statutory requirements.

History: Cr. Register, June, 1995, No. 474, eff. 7−1−95.

Subchapter IX — Grants to County Drainage Boards

ATCP 48.60 Grants to county drainage boards. (1) GENERAL. From the appropriation under s. 20.115 (7) (d), Stats., the department may award grants to county drainage boards to help those boards comply with ch. 88, Stats., and this chapter. The department shall award grants in each state fiscal year, subject to available funding. A grant may reimburse a county drainage board for up to 60 percent of the drainage board's costs to do any of the following:

Note: Section 20.115 (7) (d), Stats., was repealed by 2007 Wis. Act 20, and any future grants are contingent on a new appropriation.

(a) Develop and adopt drainage district specifications required under s. ATCP 48.20.

(b) Reassess benefits in a drainage district. The reassessment shall comply with ss. ATCP 48.02 to 48.10.

(c) Develop and adopt drainage district maintenance plans under s. ATCP 48.22.

Note: A grant under par. (c) may be used only for maintenance plans, not actual maintenance costs.

(d) Other eligible projects that the department identifies in its annual request for grant proposals under sub. (2).

(2) ANNUAL REQUEST FOR GRANT PROPOSALS. Before the department awards any grant under sub. (1) in any state fiscal year, the department shall publish an annual request for grant proposals and shall provide a copy to every county drainage board. The annual request for grant proposals shall include all the following:

(a) The amount of grant funds available for distribution in that state fiscal year ending June 30.

(b) Eligible project categories under sub. (1).

(c) The department's grant priorities, if any.

(d) The method that the department will use to allocate funds between competing grant proposals of equal priority, if it cannot fully fund all of those proposals.

Note: For example, the department may fund equally rated grant proposals on a "first come, first served" basis.

(e) General grant terms and conditions that may affect grant applications.

(f) Grant application procedures.

(g) A grant application deadline.

(h) A grant application form.

Note: Copies of a grant application form may be obtained from the department at its offices at 2811 Agriculture Drive, Post Office Box 8911, Madison, WI 53708−8911.

(3) GRANT APPLICATIONS. A county drainage board may apply for a grant under sub. (1). The county drainage board shall make the grant application on a form that the department provides under sub. (2) (h). The grant application shall be broken down by drainage district, and shall include all the following:

(a) A description of each drainage district project for which the county drainage board seeks a grant.

(b) The estimated cost of the project.

(c) The county drainage board's plan for financing the project.

(d) Competitive bidding or other procedures that the county drainage board will use to control project costs.

Note: A county drainage board is not required to select the low bidder for a funded project. But the department may make its grant award and payments based on the low bid cost.

(e) Other information required by the department.

(4) GRANT AWARDS. Within 90 days after the grant application deadline under sub. (2) (g), the department shall make its grant awards. The department shall give notice of its awards to all county drainage boards that applied for grants.

(5) GRANT CONTRACTS. Before the department pays any grant funds to a county drainage board, the department shall enter into a grant contract with that county drainage board. The contract shall specify the time period and other terms and conditions of the grant. The department shall make grant payments according to sub. (6) and the grant contract.

(6) GRANT PAYMENTS. (a) The department shall make grant payments after the county drainage board completes the funded project and pays its share of the project costs. The department may not pay for any project cost incurred after the end of the grant period specified in the grant contract.

(b) The county drainage board shall submit a payment request on a form provided by the department. In its request, the county drainage board shall document that it has completed the project and paid its share of the project costs.

Note: Copies of a payment request form may be obtained from the department at its offices at 2811 Agriculture Drive, Post Office Box 8911, Madison, WI 53708−8911.

(c) The department shall make grant payments to the county treasurer, for the benefit of the county drainage board. If the county drainage board hires an agent to complete a project on its behalf, the department may, at the request of the county drainage board, make a check jointly payable to the county treasurer and that agent.

History: CR 01−004: Cr. Register January 2002 No. 553, eff. 2−1−02.

Appendix E

Chapter 88, Wisconsin Statutes

Electronic reproduction of 2009−10 Wis. Stats. database, current through 2011 Wis. Act 39 and July 25, 2011.

CHAPTER 88

DRAINAGE OF LANDS

SUBCHAPTER I
GENERAL PROVISIONS
88.01 Definitions.
88.02 Outstanding securities and contracts not affected.
88.03 Drainage proceedings equitable in nature.
88.032 Amendment of documents.
88.04 General rules relating to signatures on petitions.
88.05 General rules applicable to notices of hearings.
88.06 General procedure for obtaining consent or approval of the court in drainage proceedings.
88.065 General procedure for drainage board hearings.
88.07 General rules; drainage proceedings in court.
88.08 Costs in drainage proceedings.
88.09 Certiorari; drainage board decisions.
88.10 Guardian ad litem; failure to appoint.
88.11 Assistance to drainage districts.
88.12 Proceedings when drainage area is in more than one county.
88.13 Right to enter lands of drainage district.
88.14 Controversies between districts.
88.145 Limitation of damages and suits.
88.16 Notification requirements, engineering study.
88.161 Transition for certain drainage districts.
SUBCHAPTER II
APPOINTMENT, POWERS AND DUTIES OF DRAINAGE BOARD
88.17 Appointment and organization of drainage board.
88.172 Limited liability of drainage board members.
88.18 County treasurer to serve as treasurer of drainage districts.
88.19 Board to keep records.
88.20 Conflict of interest prohibited.
88.21 General powers of the drainage board.
88.212 Required actions for the drainage board.
88.215 Landowner petitions.
88.22 Power of board to contract with the federal government and other agencies.
88.23 Power of board to levy assessments for costs.
88.24 Board to file annual report.
SUBCHAPTER III
ORGANIZATION OF DRAINAGE DISTRICTS
88.27 Who may petition for organization of a drainage district.
88.28 Contents of petition.
88.29 Referral of petition to board; examination of lands; hearing by board.
88.31 Special procedure in cases affecting navigable waters.
88.32 Report to the court.
88.33 Drainage project may be stopped prior to organization of district.
88.34 Hearing by the court; organization of drainage district.
88.35 Laying out drains, assessment of benefits and award of damages in newly organized district.
88.36 Hearing on report.
SUBCHAPTER IV
GENERAL RULES APPLICABLE TO ASSESSMENTS
88.40 Assessments for costs to be certified to register of deeds; assessments are lien on lands.
88.405 Assessment for connection to district drain.
88.41 Payment of assessments for costs.
88.42 Unpaid drainage assessments to be collected as taxes.
88.43 Collection of assessments as delinquent taxes.
88.44 Contesting validity of assessments.
88.45 Procedure upon discovering omitted assessments.
88.46 Reassessment of benefits.
88.47 Apportionment of assessments when assessed parcel is divided.
88.48 Assessment of county and municipal lands.
88.49 Assessment of one district by another; judgment against district.
88.50 When state lands subject to assessment; right−of−way across state lands.
SUBCHAPTER V
BORROWING MONEY; REFINANCING; COMPROMISE OF DEBTS
88.54 Borrowing money.
88.55 Refunding district obligations.
88.56 Compromise and discharge of obligations.
88.61 Laying out drains, assessment of benefits and award of damages in existing drainage district.
SUBCHAPTER VI
CONSTRUCTION, MAINTENANCE AND IMPROVEMENT OF DRAINS
88.62 Conditions relative to doing of work.
88.63 Maintenance and repair of drains.
88.64 Assessment against municipalities for enlargement or maintenance of drains.
88.66 Construction and repair of drains crossing railroad right−of−way.
88.67 Construction and repair of drains crossing utility installations; laying utility installations across drains.
88.68 Construction of drain across public highway; construction of bridges across drains.
88.69 District liable for damage to land outside its boundaries.
88.70 Formation of subdistrict to obtain more thorough drainage.
88.71 Enlarging or supplementing existing drains.
88.72 Removal of dams or other obstructions in drainage outlets.
88.73 Providing drainage for lands assessed but not adequately drained.
SUBCHAPTER VII
ENLARGEMENT, CONSOLIDATION, DIVISION AND DISSOLUTION OF DRAINAGE DISTRICT
88.77 Annexation of lands upon petition of owners.
88.78 Annexation of benefited lands.
88.79 Consolidation of drainage districts in process of organization.
88.791 Consolidation of existing drainage districts.
88.80 Withdrawal of lands from drainage district.
88.81 Proceedings to suspend operations of drainage district.
88.82 Dissolution of drainage districts.
88.83 Transfer of district to city or village jurisdiction.
SUBCHAPTER VIII
RIGHTS OF DRAINAGE; PRIVATE DRAINS; MISCELLANEOUS PROVISIONS
88.87 Road grades not to obstruct natural drainage, landowners not to obstruct highway drainage; remedies.
88.88 Railroad to construct ditch or sluiceway across right−of−way.
88.89 Roads not to obstruct natural watercourse.
88.90 Removal of obstructions from natural watercourses.
88.91 Penalty for placing obstruction in ditches.
88.92 Private drains not to be connected with district drains.
88.93 Right to take water from drainage ditch.
88.94 Drains for individual landowners.

SUBCHAPTER I

GENERAL PROVISIONS

88.01 Definitions. In this chapter, unless the context requires otherwise:

(1) "Benefits" includes all pecuniary advantages accruing to lands from the construction of the drain or proposed drain.

(2) "Board" or "drainage board" means the board created and appointed under s. 88.16, 1991 stats., or under s. 88.17.

(2m) "Bond" means any bond, note or other obligation of a drainage board issued under this chapter, including any refunding bond.

(3) "Clerk of court" means the clerk of circuit court.

(4) "Cost of construction" includes damages to lands both within and outside the district, reasonable attorney fees for petitioners and the board, and all other reasonable and necessary expenses incurred in the organization of and in the construction and completion of the works of a drainage district.

(5) "County treasurer" means the treasurer of the county in which the drainage board having jurisdiction of the drainage district is located.

(6) "Court" means the circuit court of the county in which the drainage district is located or the circuit court having jurisdiction of the proceedings in any drainage district located in more than one county.

(7) "District" means any drainage district subject to this chapter.

Electronic reproduction of 2009−10 Wis. Stats. database, current through 2011 Wis. Act 39 and July 25, 2011.

(8) "Drain" means any device for the drainage of water from land or the protection of land from water, including open ditches, tiles, pipelines, pumps and levees.

(8m) "Duck Creek Drainage District" has the meaning given in s. 30.01 (1nm).

(9) "Interested person" includes the state or any agency or subdivision thereof.

(10) "Judge" means the judge of the circuit court having jurisdiction of the proceedings of any drainage district, or the person sitting for the judge.

(11) "Land" or "lands" means any real property or interest therein, whether privately or publicly owned, including railroad rights−of−way, public highways, streets and alleys.

(12) "Mortgagee" means every person holding a mortgage or an assignment of a mortgage against lands within a drainage district or proposed drainage district whose name and post−office address is known to the board or whose mortgage or assignment is legally recorded and contains the post−office address of such mortgagee or assignee.

History: 1977 c. 449 ss. 193 to 195, 497; 1983 a. 189; 1989 a. 31; 1993 a. 456, 490; 1999 a. 9; 2005 a. 253.

88.02 Outstanding securities and contracts not affected. Nothing in this chapter may render more difficult the collection of outstanding bonds or notes of any drainage organization or impair the obligation of any contract made by the organization or defeat any vested property right of the organization. No assessment of supplemental benefits nor any reassessment of benefits may disturb any previous assessment for the cost of construction while bonds or notes based on the construction are unpaid. Assessments shall remain liens upon the same lands and claims against the same corporations in the same amounts as when first assessed and recorded, until the bonds and notes based on the construction are paid or refunded.

History: 1993 a. 456.

88.03 Drainage proceedings equitable in nature. All court proceedings under this chapter are equitable in nature. The court may in any proceeding bring in new parties as if they were original parties to the proceeding.

History: 1977 c. 449; 1993 a. 456.

88.032 Amendment of documents. (1) Any document or paper filed or entered in a proceeding before the court may at any time be amended, modified or corrected by the court as the facts warrant and upon such notice as the court orders.

(2) Any document or paper filed or entered in a proceeding before the drainage board may at any time be amended, modified or corrected by the drainage board as the facts warrant and upon such notice as the drainage board orders, except that no amendment, modification or correction of any assessment may be made after the issuance of money obligations based on the assessment if the result of the amendment, modification or correction would be to render the obligations more difficult to collect.

History: 1993 a. 456 ss. 10, 11.

88.04 General rules relating to signatures on petitions. (1) Any person entitled to sign a petition to the court or the drainage board under this chapter may sign through an agent. The authority of the agent shall be in writing and shall be filed with the drainage board but need not be acknowledged, sealed or witnessed.

(2) If any minor or individual adjudicated incompetent owns land in a drainage district or proposed drainage district or proposed annex to a drainage district, the guardian or next of kin of the minor or individual may sign petitions under this chapter for and on behalf of the minor or incompetent.

History: 1991 a. 316; 1993 a. 456; 2005 a. 387.

88.05 General rules applicable to notices of hearings. If a hearing is required on a petition or report filed with the court or a petition filed with the drainage board under this chapter, the following rules apply unless some different procedure is expressly provided under this chapter:

(1) In the case of a court hearing:

(a) The order fixing the time and place of the hearing shall be made by the court.

(b) The notice of hearing is sufficient in form and substance if it recites all of the following:

1. That a particular petition or report has been filed.
2. The place of filing.
3. That it is subject to the inspection of all interested persons.
4. If a petition, the request for relief, or the substance of the request.
5. The time and place of the hearing.
6. That all objections to the jurisdiction of the court or to the sufficiency or legality of any petition or report shall be filed with the clerk of court in writing before the hearing and that the objections must be set forth clearly and in detail.

(2) In the case of a drainage board hearing:

(a) The order fixing the time and place of the hearing shall be made by the drainage board.

(b) The notice of hearing is sufficient in form and substance if it recites all of the following:

1. That a particular petition or report has been filed.
2. The place of filing.
3. That it is subject to the inspection of all interested persons.
4. If a petition, the request for relief, or the substance of the request.
5. The time and place of the hearing.
6. That all objections to the jurisdiction of the drainage board or to the sufficiency or legality of any petition, report or assessment or to the equity of any assessment or award of damages shall be filed with the drainage board in writing before the hearing and that the objections shall be set forth clearly and in detail.

(3) Notice of hearing shall be given by both mailing and publication, as follows:

(a) The notice shall be mailed, at least 20 days before the date set for hearing, to those persons designated by the applicable section as entitled to receive notice. Ordinary mail may be used.

(b) The notice shall be published as a class 3 notice, under ch. 985, in the affected area. The last insertion shall be not more than 20 days before the hearing.

(4) For the purpose of convenience of cross reference, persons commonly designated by specific sections of this chapter as entitled to receive notice are grouped as follows:

(a) The chairperson of the county highway committee except in a county with a highway commissioner appointed under s. 83.01 (1) (c), the highway commissioner; the chairperson of the county land conservation committee in the county involved; the secretary of natural resources; the state drainage engineer; and, where a railroad company is involved, the person specified in sub. (6).

(b) The persons enumerated in par. (a) and all owners of record whose lands may be affected.

(c) The persons enumerated in par. (a) and all owners and mortgagees of lands affected whose names and post−office addresses are known or can with reasonable diligence be ascertained.

(5) In the case of a court hearing, in lieu of the service by mail specified in sub. (3), the notice of hearing may be served as provided in s. 801.11 for the service of a summons, at least 20 days before the time fixed for hearing. The service is sufficient to give the court complete jurisdiction over the parties and their lands without any other service.

(6) Railroad companies shall file with the department of financial institutions a document stating the name and post−office address of the person upon whom any notice required by this chapter may be served.

2009−10 Wis. Stats. database updated and current through 2011 Wis. Act 39 and July 25, 2011. Statutory changes effective on or prior to 9−1−11 are printed as if currently in effect. Statutory changes effective after 9−1−11 are designated by NOTES. See Are The Statutes on this Website Official?

Electronic reproduction of 2009−10 Wis. Stats. database, current through 2011 Wis. Act 39 and July 25, 2011.

(7) In the case of a court hearing, the board shall file with the court proof of publication and service of the notice required by this section. The certificate or affidavit of the person who made the service, publication or mailing, or who knows the facts, is sufficient proof of service, publication or mailing.

(8) Failure to give notice as provided by this section or to announce any adjournment does not defeat the jurisdiction of either the court or the drainage board. If a failure to give legal notice to any person entitled to notice is discovered before an order is entered, the court or drainage board shall adjourn the hearing and direct the giving of proper notice. If a failure to give the notice is discovered after the order is entered, the court or drainage board may order the person not served with notice to show cause why that person should not be bound by the order already entered. In any case, notice may be waived by appearance or by a written waiver filed with the court or drainage board.

History: Sup. Ct. Order, 67 Wis. 2d 585, 773 (1975); 1977 c. 449; 1981 c. 346 s. 38; 1985 a. 29; 1991 a. 316; 1993 a. 184, 456, 491; 1995 a. 27.

88.06 General procedure for obtaining consent or approval of the court in drainage proceedings. Whenever any action by the drainage board requires the consent or approval of the court and no other procedure is expressly provided, the procedure in this section applies:

(1) The board shall file with the clerk of court a petition asking the court's consent to or approval of the particular action that the board proposes to take.

(2) Upon receipt of the petition the court shall fix the time and place of the hearing on the petition and shall order the board to give notice of the hearing as provided in s. 88.05 (1) (b) to the persons specified in s. 88.05 (4) (b).

(3) At the hearing any interested person may appear and testify either for or against the petition, subject to the requirements of s. 88.07 (1). If the court is satisfied that the board's proposed action will be in the best interests of the districts involved, it shall grant the petition and approve the report, subject to the changes and conditions that it considers advisable. Otherwise, the court shall dismiss the petition.

(4) If a petition, which is basically the same in substance as a petition which has been decided or dismissed, is filed within 3 years after the dismissal, the court may refuse to order a hearing on the petition or to take any other action with respect to it.

History: 1977 c. 135 s. 19; 1993 a. 456.

88.065 General procedure for drainage board hearings. If this chapter requires the drainage board to conduct a hearing before issuing an order and no other procedure is expressly provided, the following procedure applies:

(1) Upon receipt of the petition, the drainage board shall fix a time and place of hearing on the petition and shall give notice of the hearing as provided in s. 88.05 (2) (b) to the persons specified in s. 88.05 (4) (b).

(2) At the hearing, any interested person may appear and testify either for or against the petition or object to the report assessing costs. If the drainage board is satisfied that the proposed action will be in the best interests of the districts involved, the board shall grant the petition and issue the order, subject to the changes and conditions that the board considers advisable. Otherwise, the drainage board shall dismiss the petition.

(3) If a petition, which is basically the same in substance as a petition which has been decided or dismissed, is filed within 3 years after the dismissal, the drainage board may refuse to order a hearing on the petition or to take any other action with respect to the petition.

(4) Except as provided in sub. (5), all meetings of the drainage board are subject to subch. V of ch. 19.

(5) (a) A gathering of drainage board members solely for one or more of the following purposes is not a meeting, as defined in s. 19.82 (2):

1. Observing, supervising or undertaking the construction, maintenance or improvement of drains.

2. Observing, supervising or undertaking the construction or maintenance of highways, railroads, bridges, utilities or other similar structures that may affect drains in any drainage district.

3. Collecting information by observation, survey or measurement or by discussions with an affected landowner at the site of a drainage ditch or a proposed drainage ditch.

4. Responding to natural disasters affecting a drain.

(b) Any action taken by a drainage board under par. (a) shall be reported by the board's secretary at the next meeting of the drainage board for inclusion in the board's minutes.

(c) A drainage board may not take any action at a gathering under par. (a) if the action will result in an increase in the assessment against any property in the drainage district.

History: 1993 a. 456.

NOTE: 1993 Wis. Act 456, which creates this section, contains extensive explanatory notes.

88.07 General rules; drainage proceedings in court. (1) All objections made to the jurisdiction of the court or to the sufficiency or legality of any petition or report shall be in writing. The objections shall be set forth clearly and in detail and shall be filed with the clerk of court before the hearing.

(2) Several petitions may be filed in any proceeding. At any time before the sufficiency of the signers of the petitions has been adjudicated, additional signers may be added to the petitions with like effect as if they had signed the original petition.

(3) At any time before but not after the hearing has begun on any petition filed under this chapter, any petitioner may withdraw his or her name from the petition upon filing in court an undertaking with sufficient sureties to be approved by the court. The undertaking shall be conditioned that if the withdrawal of names reduces the number of signers below the number required by the section under which the petition is filed and thereby deprives the court of jurisdiction, the withdrawing petitioner will pay into court the costs of the drainage proceeding incurred prior to and including the making and entry of the order denying the relief requested in the petition and will pay into court the expenses incurred on the petition before his or her withdrawal.

(4) For satisfactory cause the court may adjourn any hearing for a period of not more than one month at any one adjournment. The adjournment of any meeting or hearing beyond the time, or failure to act within the time, provided in this chapter does not affect the jurisdiction of either the court or the drainage board, but a subsequent hearing shall be had and notice of the time and place thereof shall be given.

(5) Any hearing under this chapter may be adjourned by the court or presiding judge or, in his or her absence, by the clerk of court.

History: 1977 c. 135, 449; 1993 a. 456.

88.08 Costs in drainage proceedings. (1) In all proceedings under this chapter involving a petition to the court, the court shall by order tax the taxable costs of the proceeding. If costs are taxed against the drainage board, they shall not go against the board members personally but shall be paid out of the district funds or from funds received from the petitioners unless the court orders otherwise.

(2) If a petition for organization of a drainage district is dismissed before the appointment of a drainage board in the county, the order taxing costs shall be entered against the petitioners and in favor of any person who advanced moneys, rendered services or incurred other liabilities in prosecuting or contesting such proceedings, for the amount of such moneys, services and incurred liabilities.

(3) If proceedings are dismissed in any case where a drainage board has been appointed in the county, the order taxing costs shall be entered against the petitioners and in favor of the board for all costs, expenses and liabilities incurred by the board or by any

2009−10 Wis. Stats. database updated and current through 2011 Wis. Act 39 and July 25, 2011. Statutory changes effective on or prior to 9−1−11 are printed as if currently in effect. Statutory changes effective after 9−1−11 are designated by NOTES. See Are The Statutes on this Website Official?

Electronic reproduction of 2009−10 Wis. Stats. database, current through 2011 Wis. Act 39 and July 25, 2011.

other person in prosecuting or contesting such proceedings and for the benefit of those who have rendered services or advanced or loaned money in prosecuting or contesting such proceedings.

(4) Before any order taxing costs is entered, a petitioner or the board or a person contesting the proceedings shall file with the clerk of the court a duly verified itemized statement of all costs, attorney fees, and other liabilities incurred in prosecuting or contesting such proceedings, upon which an order shall be issued requiring the petitioners to show cause why an order taxing costs should not be entered against them for the amount of costs, attorneys' fees and other liabilities. Notice of hearing of such order to show cause shall be given to the petitioners as provided in s. 88.05 (3). Such order need not contain an itemized statement of such account, but shall state where such account is filed.

(5) The petitioners shall, between themselves, contribute to the payment of such costs in proportion to the number of acres of land owned by them within the boundaries of the district or proposed district at the time of filing the petition.

History: 1977 c. 449; 2005 a. 253.

88.09 Certiorari; drainage board decisions. Any person subject to an order or rule of the drainage board may, within 30 days after publication of the order or rule, commence an action seeking the remedy available by certiorari. The court may not stay proceedings involving the order or rule when an action is commenced, but may, on application, on notice to the board and for cause, grant a restraining order. The board is not required to return the original papers acted upon by it, but may return certified or sworn copies of the papers. If necessary for the proper disposition of the matter, the court may take evidence, or appoint a referee to take evidence and report findings of fact and conclusions of law as the court directs, which shall constitute a part of the proceedings upon which the determination of the court shall be made. The court may reverse or affirm, wholly or partly, or may modify, the order or rule brought up for review.

History: 1977 c. 187 s. 134; 1983 a. 219; 1993 a. 456.

88.10 Guardian ad litem; failure to appoint. Failure to appoint a guardian ad litem in a proceeding under this chapter is not jurisdictional, but when the failure is discovered a guardian ad litem shall be appointed and an order served upon the guardian ad litem to show cause why the minor or individual adjudicated incompetent should not be bound by all prior proceedings pertaining to the drainage district. On such a hearing the court shall enter such order or judgment as the facts warrant.

History: 1991 a. 316; 1993 a. 456; 1999 a. 83; 2005 a. 387.

88.11 Assistance to drainage districts. (1) The department of agriculture, trade and consumer protection shall employ an engineer, who shall be the state drainage engineer, to improve district operations. The department shall do all of the following:

(a) Perform inspections in drainage districts to determine compliance with this section.

(b) Review and approve district maintenance plans including ditch designs; installation and maintenance of structures; and plans for drainage, drainage control, soil conservation and water conservation, and require alteration of plans and existing structures in order to achieve and maintain compliance with performance standards established under par. (i).

(c) Provide guidance to drainage boards and professional engineers in developing district surveys and maintenance plans.

(d) Review and approve district designs for new ditches and structures, assist districts in developing hydrologic and hydraulic information about project effectiveness, and require alteration of the designs in order to achieve and maintain compliance with performance standards established under par. (i).

(e) Coordinate district activities with the department of natural resources.

(f) Assist districts in applying for permits under s. 88.31.

(g) Provide guidelines for compliance with federal and state agricultural and conservation programs.

(h) Establish, by rule, procedures for assessments and reassessments.

(i) Establish, by rule, performance standards for drainage district structures, ditches, maintenance and operations, in order to minimize adverse effects on water quality. The performance standards shall be consistent with any requirements imposed by the department of natural resources under s. 88.31.

(j) Prepare reports for the purposes of sub. (3).

(k) Establish, by rule, a procedure for an investigation of whether a drainage district complies with this section and any requirements imposed by the department under this section.

(L) In cooperation with the state drainage engineer, produce an educational pamphlet in 2009, and every 3 years thereafter, that describes the function of drainage districts, costs that may be assessed to persons whose property is located in a drainage district, and contact information for the state drainage engineer. The pamphlet shall be distributed, upon request, to drainage boards and to any person who requests the pamphlet.

(1m) The department of agriculture, trade and consumer protection may perform any functions related to drainage districts that the department considers appropriate.

(2) The state drainage engineer shall provide technical assistance to improve district operations on the request of the department of natural resources, drainage board, landowners in the district or the judge.

(3) If the area proposed for drainage exceeds 200 acres in a single project, the board or the petitioners, before the hearing on the report under s. 88.34, 88.36 or 88.77, shall procure a report of the department of agriculture, trade and consumer protection on all of the following:

(a) The location, design, feasibility and cost of the proposed outlet drains.

(b) A general description of the additional drainage necessary to reclaim the land fully for general agricultural purposes, and its probable cost.

(c) A general comparison of the benefits in the different parts of the district on the basis of the location and design of the proposed drains.

(d) The physical features of the land to be drained.

(4) The board or the petitioners, with the aid of an engineer having the qualifications specified in s. 88.21 (5), shall make the necessary survey and evaluation as directed by the department of agriculture, trade and consumer protection for its report.

(6) A drainage district shall comply with the rules promulgated under this section and any requirements imposed by the department of agriculture, trade and consumer protection under this section.

(7) The department of agriculture, trade and consumer protection may issue a special order directing the immediate cessation of work regulated under this section until the necessary plan approval is obtained or until the project complies with this section.

(8) Any person who violates this section may be required to forfeit not less than $25 nor more than $500 for each violation. Each day of continued violation constitutes a separate offense.

History: 1989 a. 31 ss. 2200d, 2200k; 1991 a. 309; 1993 a. 456; 2001 a. 103; 2007 a. 121.

Cross−reference: See also ch. ATCP 48, Wis. adm. code.

88.12 Proceedings when drainage area is in more than one county. (1) If a proposed drainage district lies in more than one county, the petition for organization of the district shall be filed in the court of the county containing the largest acreage proposed for drainage by the petition, and the court of that county has jurisdiction of the organization of the drainage district.

Electronic reproduction of 2009−10 Wis. Stats. database, current through 2011 Wis. Act 39 and July 25, 2011.

(2) In cases affecting a multicounty drainage district, copies of all court orders and judgments shall be filed in the court of each of the other counties in which the drainage district is located.

(3) If a drainage district lies in more than one county, the drainage board of the county containing the largest acreage that is drained or proposed for drainage has jurisdiction of the operation of the drainage district. The drainage board that initially has jurisdiction of the operation of a drainage district retains that jurisdiction even if the drained acreage is subsequently changed, unless the drainage board that initially has jurisdiction agrees with the drainage board of any other county containing land of the drainage district to transfer jurisdiction.

(4) All moneys collected on behalf of the drainage district in the other counties shall be transmitted to the treasurer of the county in which the drainage board has jurisdiction.

History: 1977 c. 449; 1993 a. 456.

88.13 Right to enter lands of drainage district. Whenever necessary for any purpose connected with the organization of a district or the construction, maintenance or repair of drains and other works, members of the board, representatives of the department of agriculture, trade and consumer protection, and persons intending to bid on or to whom contracts have been let for the construction of the works within a district and their respective agents and employees may go upon any lands proposed for inclusion or included within a district or on adjoining lands, and are not guilty of trespass therefor but are liable for unnecessary damage caused to crops or structures.

History: 1989 a. 31.

88.14 Controversies between districts. (1) If a controversy arises out of the relationship of 2 or more drainage districts that are subject to the jurisdiction of a single drainage board, the board may hold hearings and take whatever other action it considers necessary toward settling the controversy, including the issuance of orders.

(2) If a controversy arises out of the relationship of 2 or more drainage districts that are subject to the jurisdiction of 2 or more drainage boards, the boards shall attempt to settle the controversy and may hold hearings and take whatever other action they consider necessary to accomplish that objective. If the drainage boards are unable to settle the controversy, the matter shall be submitted to arbitration under ch. 788.

History: 1977 c. 449; 1993 a. 456.

88.145 Limitation of damages and suits. In any action against a drainage district, drainage board, drainage board member, drainage board employee or an owner of land within the district who undertakes work approved by the drainage board, s. 893.80 is applicable and the limit on the amount recoverable by any person under s. 893.80 (3) applies to the drainage board, the members and employees of the drainage board, the drainage district and any owner of land within the district who undertakes work approved by the drainage board. This section does not apply to actions commenced under s. 19.37, 19.97 or 281.99.

History: 1993 a. 456; 1995 a. 158; 1997 a. 27.

NOTE: 1993 Wis. Act 456, which creates this section, contains extensive explanatory notes.

88.16 Notification requirements, engineering study. (1) If a board takes any action which results in the hiring of an engineer to conduct a study that is related to the operation of a drain, or the district, the board shall send, as soon as possible, written notice of the action to all of the following:

(a) The governing body of the city, village, or town that has jurisdiction over the area which is subject to the engineering study.

(b) The governing body of the county that has jurisdiction over the area which is subject to the engineering study.

(c) The governing body of any city or village that has extraterritorial jurisdiction over the area which is subject to the engineering study.

(2) As soon as possible after the engineering study is completed, the board shall send written notice to the governing bodies which received notice under sub. (1) informing them of the study's completion and providing them information as to where the study may be reviewed.

(3) A board's failure to notify under sub. (1) does not invalidate any decision made or action taken by the board.

History: 2007 a. 121.

88.161 Transition for certain drainage districts. A drainage district operating under s. 88.16, 1989 stats., becomes a drainage district under this chapter as a matter of law on June 1, 1993. The records, assessments, funds and indebtedness of such a drainage district become the records, assessments, funds and indebtedness of the drainage district that takes its place. Before June 1, 1993, the circuit court of each county having a drainage district that has elected to operate under s. 88.16, 1989 stats., shall appoint a county drainage board under s. 88.17, if none exists, to take the place of the board of drainage commissioners of a district that elected to operate under s. 88.16, 1989 stats. The terms of office of the members of the new board commence on June 1, 1993.

History: 1991 a. 309.

SUBCHAPTER II

APPOINTMENT, POWERS AND DUTIES OF DRAINAGE BOARD

88.17 Appointment and organization of drainage board. (1) The court shall appoint a drainage board either upon the filing of a petition for organization of a drainage district under this chapter in a county that does not already have a drainage board or upon the filing of a petition by a landowner in a drainage district or the state drainage engineer for appointment of a drainage board in a county that already has a drainage district. The board shall consist of 3 persons. One member of the original board shall be appointed for a term of one year, one for 2 years and one for 3 years. Upon the expiration of the term of office of a board member, the court shall appoint a successor for a 3−year term in the same manner as the original appointment was made.

(2) A drainage board may by rule, after the original board is appointed, increase the number of members to 5. In the rule increasing the number of members, the board shall provide for staggered terms, with all members serving terms of 5 years. After increasing the number of board members, the board may, by rule, reduce the number of members to 3, but only if the size of the board is reduced as vacancies occur on the board.

(2d) The board shall notify the court if any position on the board becomes vacant and the court shall appoint a successor. The board shall notify the court if the size of the board is increased under sub. (2) and the court shall appoint the additional board members. If a position on the board remains vacant for more than 6 months, either the state drainage engineer or any landowner in a drainage district subject to the jurisdiction of the board may petition the court to appoint a successor.

(2h) The court shall appoint drainage board members from among persons recommended by any of the following:

(a) The committee on agriculture and extension education created under s. 59.56 (3) (b), which shall recommend at least 3 persons for each position to be filled.

(b) At least 3 landowners owning property in a drainage district that is subject to the jurisdiction of the drainage board.

(2p) In appointing members, the court shall attempt to assure that at least one of the members serving on the drainage board at any time is an experienced farmer who is familiar with drainage and that another of the members is familiar to some extent with drainage engineering.

Electronic reproduction of 2009−10 Wis. Stats. database, current through 2011 Wis. Act 39 and July 25, 2011.

(2t) A drainage board member shall serve until a successor is appointed and qualified.

(3) Each member of the board shall take and file the official oath.

(4) Ownership of or interest in lands sought to be drained does not disqualify a person from acting as a member of the drainage board, but any board member may request the court to, and the court may in its discretion, appoint a suitable person to act in a member's place when the board is considering matters pertaining to the particular drainage district in which the member is interested.

(5) When all its members have been duly sworn and qualified, the drainage board is a permanent body corporate and is subject to all rules of law applicable to public corporations.

(6) The board shall organize by election one of its members president and another of its members secretary. A majority of the board constitutes a quorum to do business. In the absence of a quorum, any member present may adjourn any meeting and make announcement thereof.

(7) Each board member shall be reimbursed for actual and reasonable expenses incurred in the performance of the member's duties and, in addition, shall receive as compensation for actual and necessary services a per diem in an amount determined by the drainage board, not to exceed $40. In addition, the county board may reimburse drainage board members for actual and reasonable expenses incurred in performance of duties on behalf of the county.

(8) Each board member shall keep an accurate record of services rendered and expenses incurred by the member, together with the date thereof and the district for which services were rendered or in connection with which expenses were incurred. Board members shall file their bills for compensation and expenses with the county treasurer. Each bill shall indicate the district to which specific items are to be charged or the proportion of the bill to be paid by specified districts. The county treasurer, as treasurer of drainage districts, shall pay the bill if funds are available for that purpose and shall charge the accounts of the respective drainage districts liable for the bill in accordance with the order allowing the bill.

(9) The court may by order abolish the drainage board if there no longer are any drainage districts in the county.

History: 1977 c. 449; 1991 a. 316; 1993 a. 456; 1995 a. 201.

NOTE: 1993 Wis. Act 456, which substantially affects this section, contains extensive explanatory notes.

88.172 Limited liability of drainage board members. (1) Except as provided in subs. (2) and (3), a drainage board member is not liable to any other person for damages, settlements, fees, fines, penalties or other monetary liabilities arising from a breach of, or failure to perform, any duty resulting solely from his or her status as a drainage board member, unless the person asserting liability proves that the breach or failure to perform constitutes any of the following:

(a) A willful failure to deal fairly with any person in connection with a matter in which the drainage board member has a material conflict of interest.

(b) A violation of criminal law, unless the drainage board member had reasonable cause to believe that his or her conduct was lawful or no reasonable cause to believe that his or her conduct was unlawful.

(c) A transaction from which the drainage board member derived an improper personal profit.

(d) Willful misconduct.

(2) Except as provided in sub. (3), this section does not apply to any of the following:

(a) A civil or criminal proceeding brought by or on behalf of any governmental unit, authority or agency.

(b) A proceeding brought by any person for a violation of state or federal law if the proceeding is brought under an express private right of action created by state or federal statute.

(3) Subsection (2) does not apply to a proceeding brought by a governmental unit, authority or agency in its capacity as a private party or contractor.

History: 1993 a. 456.

NOTE: 1993 Wis. Act 456, which creates this section, contains extensive explanatory notes.

88.18 County treasurer to serve as treasurer of drainage districts. (1) The county treasurer shall serve as treasurer of all drainage districts under the jurisdiction of the drainage board. All moneys collected for or payable to any such drainage district shall be turned over to or paid to the county treasurer and shall be paid out by the treasurer only upon proper warrants of the drainage board. The county treasurer may retain for the benefit of the county a portion of the interest received on drainage district funds held by the county treasurer, not to exceed the cost to the county treasurer of providing services to the drainage board under this chapter, the cost to the zoning administrator of maintaining drainage board records under s. 88.19 and the cost to the zoning administrator of providing copies of drainage board records to the drainage board.

(2) The county treasurer shall keep a separate account for each drainage district in which the treasurer shall charge such district with all amounts paid out on its behalf pursuant to sub. (1) and shall credit the district with:

(a) All sums received in payment of drainage assessments of that district, including penalties and interest on the sums.

(e) All other sums received on account of the drainage district other than interest received on drainage district funds held by the county treasurer.

(3) The drainage board may appoint a treasurer who shall act as the deputy of the county treasurer. The drainage board may assign any part or all of the county treasurer's duties under this chapter to the drainage board treasurer. The drainage board treasurer shall be reimbursed for actual and reasonable expenses incurred in the performance of the treasurer's duties in the same manner as provided for drainage board member expenses under s. 88.17 (8). The drainage board shall require a bond from the drainage board treasurer in an amount, set by the board, that is sufficient to exceed the greatest amount of funds expected to be held in his or her custody, and with the sureties that the drainage board requires. The bond shall be conditioned in substantially the same form as the ordinary bond required from the county treasurer, with the necessary changes.

History: 1987 a. 378; 1991 a. 316; 1993 a. 456.

88.19 Board to keep records. (1) It is the duty of the secretary of the board to keep records of all drainage proceedings. The secretary shall also maintain a minute book in which the secretary shall enter the minutes of the board meetings. The secretary shall be compensated for such services under s. 88.17 (7) and (8).

(2) The secretary of the board shall keep a complete record of the assessed lands in each district under the board's jurisdiction. Such records shall be so arranged that they will readily show, for each parcel of land assessed, the latest confirmed assessment of benefits and the total assessments for costs which have been made against such lands, with adequate space provided for noting all payments of assessments for costs or installments thereof. The secretary of the board shall periodically check with the county treasurer to determine what drainage assessments or installments thereof have been paid and shall note such payments in the records required to be kept pursuant to this subsection.

(3) The secretary of the board is legal custodian of all drainage records and the secretary shall comply with subch. II of ch. 19. Upon request for any of the drainage records by the county trea-

Electronic reproduction of 2009−10 Wis. Stats. database, current through 2011 Wis. Act 39 and July 25, 2011.

surer, the secretary of the board shall furnish the county treasurer with a copy of the records specified in sub. (2).

(4) (a) Subject to pars. (b) and (d), and subject to criteria and standards under rules that the department of agriculture, trade and consumer protection shall promulgate, all of the following shall occur:

1. The drainage board secretary shall distribute drainage board records to the state drainage engineer and to the county zoning administrator.

2. The drainage board and the county zoning administrator shall retain certain records of the drainage board.

(b) The secretary of the drainage board and the county zoning administrator shall maintain in perpetuity any records consisting of an order creating or altering the boundaries of a district, maps or descriptions of the boundaries of a district, profiles and cross sections of any drains and an order levying original or supplemental assessments for costs.

(c) The drainage board and the county administrator may destroy obsolete drainage board records.

(d) Before any records may be destroyed under this subsection, the secretary of the drainage board and the county zoning administrator shall give at least 60 days' prior written notice of the proposed destruction to the state historical society, which may preserve records that it determines to be of historical interest, and shall give at least 60 days' prior written notice to the state drainage engineer, who may preserve records determined to be of interest to the department of agriculture, trade and consumer protection.

(5) The state drainage engineer shall examine the records in the possession of all drainage board secretaries and drainage districts and the records received from clerks of court under 1993 Wisconsin Act 456, section 118, and may examine any other records held by any person relating to drainage in this state. The state drainage engineer shall determine the records that are required to be preserved under sub. (4) and make copies of the records. The state drainage engineer shall retain a copy of the records and deliver a copy to the county zoning administrator.

(6) The secretary of the drainage board, under sub. (4), shall provide a copy of drainage board records created after May 13, 1994, to the state drainage engineer and the county zoning administrator.

(7) The county zoning administrator shall maintain the records delivered under sub. (5) and any records provided under sub. (6) as provided under sub. (4).

History: 1991 a. 316; 1993 a. 456.

NOTE: 1993 Wis. Act 456, which amends (3) and creates subs. (4) to (7), contains extensive explanatory notes.

88.20 Conflict of interest prohibited. (1) No member of a drainage board shall be interested directly or indirectly:

(a) In any contract with the drainage board; or

(b) In any contract for work or materials in or for a drainage district; or

(c) In any contract for the sale of machinery or materials for or to the drainage board; or

(d) In the wages or supplies of persons employed on work in or for a drainage district.

(2) No board member shall deal in securities of a drainage district.

88.21 General powers of the drainage board. In addition to other powers expressly granted or necessarily implied, the drainage board may:

(1) Adopt and use a corporate seal.

(2) Sue and be sued and compromise suits and controversies.

(3) Bring all necessary actions for the collection of moneys and forfeitures belonging to a district under its jurisdiction and for the protection and preservation of all works and property thereof.

(4) Obtain injunctions to prevent unlawful interference with the performance of its duties or exercise of any of its powers.

(5) Employ legal counsel, engineers and other assistants. Any engineer employed by the board shall be selected from a list of professional engineers approved by the department of agriculture, trade and consumer protection. The department of agriculture, trade and consumer protection shall furnish each drainage board, upon request, a list of professional engineers whom it considers qualified by training and experience to give competent advice in drainage matters.

(6) Purchase or condemn such lands, whether within or outside a district, as are necessary for the construction, cleaning out, repair and maintenance of the drainage system and its works. Condemnation shall be as provided by ch. 32.

(8) Level or permit the leveling of spoil banks and excavated materials to allow cultivation or use for roadway or other lawful purposes if such use will not interfere with the proper functioning of the drains.

(9) Purchase or lease and maintain and operate the equipment and machinery necessary to construct, maintain or repair the drains within the districts under its jurisdiction, including the control of weeds or brush through use of herbicides.

(10) Purchase, construct, maintain and operate all levees, bulkheads, reservoirs, silt basins, holding basins, floodways, floodgates and pumping machinery necessary to the successful drainage or protection of any district or of any considerable area thereof, whether located within or outside the district.

(11) Call district meetings to report on the affairs of the district and to obtain the opinions and suggestions of landowners in the district with regard to the affairs of the district.

(12) Adopt rules and issue orders, which shall be published as a class 1 notice under ch. 985. In addition, any order that pertains to a specific named person or property shall be served on the person or owner of the property in the manner provided for service of a summons under s. 801.11. The court has jurisdiction to enforce an order of the drainage board by injunctive or other appropriate relief.

(13) Authorize legal counsel for the board to represent an individual owner of land with respect to any matter that arises under this chapter.

History: 1989 a. 31; 1993 a. 456.

A drainage board is subject to shoreland zoning ordinances, as is any other person. Although soil conservation districts and drainage districts are created for a different purpose, some activities of both accomplish similar ends; therefore, each district retains control over those activities which it undertakes for the purposes for which it was created. 63 Atty. Gen. 355.

Chapter 30 applies to navigable ditches that were originally navigable streams. If a navigable ditch was originally nonnavigable or had no previous stream history, DNR's jurisdiction depends upon the facts of each situation. 63 Atty. Gen. 493.

88.212 Required actions for the drainage board. In addition to other powers expressly granted or necessarily implied, the drainage board shall:

(1) Beginning in 2009, and every 3 years thereafter, provide written notice to every person who owns land that is located within the drainage district that such land is in the district. The notice shall also include contact information for every member of the drainage board.

(2) Annually, provide contact information for every member of the drainage board to the state drainage engineer and to the clerk of every city, village, town, and county in which the drainage district is located.

(3) Not later than November 1 of each year, provide the clerk of each taxation district in which the drainage district is located a list of every assessment issued by the drainage board from November 1 of the previous year to October 31 of the current year. The information shall specify the assessment amount for every parcel in the district.

History: 2007 a. 121.

Electronic reproduction of 2009−10 Wis. Stats. database, current through 2011 Wis. Act 39 and July 25, 2011.

88.215 Landowner petitions. The owners of land in a district may petition the drainage board to hold a district meeting. The petition shall be signed by at least 10% of the owners of land within the district or by the owners of at least 10% of the lands within the district. The drainage board shall either schedule a district meeting to be held within 60 days after receiving the petition or deny the petition, by issuing a published order, within 60 days after receiving the petition. The drainage board may deny the petition only on the grounds that it is unreasonable.

History: 1993 a. 456.

NOTE: 1993 Wis. Act 456, which creates this section, contains extensive explanatory notes.

88.22 Power of board to contract with the federal government and other agencies. The drainage board may:

(1) Enter into agreements with the U.S. government or an officer or agency thereof to permit the drainage of lands owned or occupied by such government or agency, through the use of the drains of which the board has charge. Such agreement may result in adding lands to the drainage district, may provide for apportionment of the assessments for costs of repairs, maintenance and administration with respect to the draining of such lands, and may authorize the U.S. government or its officer or agency to repair, maintain, deepen, widen and change drains located upon lands owned or occupied by such government or agency as long as such change does not impair the drainage rights of other owners through such lands. No such agreement shall permit the draining of raw sewerage in any such drains.

(2) Negotiate and obtain a loan from the federal government or any officer or agency thereof, or from any other public or private loan agency, for the purpose of paying or redeeming outstanding bonds and other obligations of a district under its jurisdiction. Such loan may be negotiated upon such terms and conditions as the board deems to be in the best interest of the district, including without restriction by reason of enumeration provisions for:

(a) Extending the time of payment of delinquent and unmatured installments of assessments for cost of construction, inclusive of interest accrued thereon, for a period of not to exceed 40 years.

(b) Deferring payment of any portion of the principal of unpaid and unmatured assessments of cost of construction, inclusive of interest already accrued thereon, for a period of not to exceed 10 years and provide for the payment of such delinquent and unpaid assessments of cost of construction in equal annual installments over a period of years.

(c) Arrange with the holders of bonds and notes and other creditors of the district for surrender of their claims against the district and for accepting money or bonds in payment thereof.

(3) Enter into contracts with the U.S. government or an officer or agency thereof to accept the benefits of any federal law pertaining to flood prevention or the conservation, development, utilization and disposal of water. Without restriction by reason of enumeration, the contracts may provide that the district on whose behalf the contract is negotiated will:

(a) Provide without cost to the United States all lands necessary for the construction of the project and for the subsequent maintenance and operation of the project.

(b) Contribute such part of the first cost of construction of such project as is agreed upon with the United States, either in cash or in credits, for purchase of material or performance of work forming part of the project.

(c) Hold and save the United States harmless from claims for damages to any property resulting from construction of the works of the project.

(d) Maintain and operate all the works after completion of the project in accordance with regulations prescribed by the U.S. government or any officer or agency thereof.

History: 1971 c. 323 s. 27; 1981 c. 346 s. 38; 1993 a. 456; 1995 a. 225.

88.23 Power of board to levy assessments for costs. **(1)** In addition to the assessments for cost of construction authorized by s. 88.35, the board may issue orders to levy assessments for costs of maintenance and repair or for any other lawful expenditures of a drainage district. All of the assessments shall be apportioned on the confirmed benefits then in effect in the district assessed.

(2r) The board may authorize one or more owners of land in a drainage district to prepare a proposed assessment for cost of construction or maintenance and repair.

(3) Assessments made under this section are subject to ss. 88.40 to 88.43. In no case may the total assessments against any land exceed the benefits assessed against that land unless an interested person agrees to pay such excess and furnishes the drainage board with sufficient security for the excess benefits or unless the assessment is for the purpose of covering the cost of repair and maintenance as defined in s. 88.63.

(4) The board may borrow money and issue notes or bonds based upon any assessments levied under this section in the same manner as for original assessments.

History: 1971 c. 67; 1993 a. 456.

88.24 Board to file annual report. On or before December 1 of each year the board shall file with the department of agriculture, trade and consumer protection; the town board or town zoning committee; the city council, plan commission, or plan committee; and the county zoning administrator, in which district territory is located, a separate report, for the preceding year ending August 31, on each drainage district under the board's jurisdiction. All local units of government that receive the report shall consider it before making any zoning or planning decisions that may affect a drainage district that is located within its boundaries. The reports shall constitute part of the records of the districts reported on, shall be verified by the oath of one or more of the board members, and shall contain:

(1) A financial statement.

(2) A statement of all bonds paid or issued during the preceding year.

(3) A statement of all work done during the preceding year, specifying where the same was done and the cost thereof.

(4) A statement of the district's practices and policies.

History: 1993 a. 456; 2007 a. 121.

SUBCHAPTER III

ORGANIZATION OF DRAINAGE DISTRICTS

88.27 Who may petition for organization of a drainage district. **(1)** Except as provided in sub. (1m), any of the following may petition for the organization of a drainage district under this chapter:

(a) The owners of more than one−half in area of the lands, excluding lands owned by this state, proposed to be included within the drainage district.

(b) The majority of landowners within the proposed drainage district, owning at least one−third in area of the lands, excluding lands owned by this state, proposed to be included within such district.

(1m) A state agency, as defined in s. 16.61 (2) (d), may not petition for the organization of a drainage district.

(2) No petition having as many signers as are required by this section shall be declared void, but the court may at any time permit the petition to be amended in form and substance to conform to the facts, if the facts justify the organization of a district. All petitions for the organization of the same or substantially the same district filed prior to the hearing under s. 88.34 shall be considered by the

Electronic reproduction of 2009−10 Wis. Stats. database, current through 2011 Wis. Act 39 and July 25, 2011.

court as one petition, and all signatures to such petitions shall be counted in determining the jurisdiction of the court.

History: 1993 a. 456.

88.28 Contents of petition. (1) A petition for organization of a drainage district shall be filed with the court and shall set forth:

(a) A description of the lands proposed to be included in the district and that they will be improved by drainage.

(b) That the public health or public welfare will be promoted by the drainage.

(c) A map or sketch of the area sought to be drained, with the proposed drains shown thereon.

(d) That the cost of construction will not exceed 75% of the appraised benefits arising from such drainage.

(e) A proposed name or number for the district.

(f) The names and addresses of the owners and mortgagees of all lands in the district, so far as known to the petitioners.

(g) A request for the organization of the drainage district.

(h) If the purpose of such petition is the enlargement, repair or maintenance of a drain, heretofore constructed under any law of this state, the petition shall give a general description of the drain with such particulars as the petitioners deem important.

(i) The quality and character of soils and subsoils in the proposed district.

(j) A soil map of the proposed district.

(k) The present agricultural value of the lands.

(L) The kind of crops which will be grown on the land after drainage.

(2) In lieu of meeting with the requirements of sub. (1) (d), the petitioners may file with the petition a written agreement that they will pay such portion of the cost of construction as exceeds 75% of the appraised benefits to all lands resulting from the construction of the proposed drainage works.

(3) The petition need not be verified.

History: 1977 c. 449; 1993 a. 456; 2007 a. 121 s. 6.

88.29 Referral of petition to board; examination of lands; hearing by board. (1) Upon receipt of a petition for organization of a drainage district the court or judge by order shall refer the petition to the drainage board and order the board to report thereon.

(2) When a petition has been so referred to the board, the board, with the aid of an engineer having the qualifications specified in s. 88.21 (5), shall examine the lands described in the petition and all other lands that the board believes will be benefited or damaged by the proposed work and shall consider whether the drains as proposed in the petition are satisfactory.

(3) The board also shall hold a hearing on the petition to ascertain the sufficiency of the signers and to hear all interested persons who desire to be heard for or against the petition.

(4) The board shall fix a time and place of the hearing on the petition, on or conveniently near the lands described in the petition, and shall give notice of the hearing as provided in s. 88.05 (2) (b) to the persons specified in s. 88.05 (4) (c).

(5) The notice shall describe the lands involved and may be in substantially the following form:

"Notice is hereby given that the drainage board of .... County will meet on the .... day of .... , ... (year), at .... o'clock, ... M. at the (here describe the place of meeting) to consider the petition filed in the circuit court of .... County to drain lands among which are the following: (here describe the lands described in the petition). All persons interested may appear and be heard on the petition.

Dated ....

.....

.....

.....

Drainage Board".

(6) The board may adjourn the hearing to a time and place that it considers convenient or necessary. The board shall either make a public announcement of the time and place of the adjournment or give notice as provided in s. 88.05 (2) (b) to the persons specified in s. 88.05 (4) (a) and also by publication of the notice once in the vicinity in a newspaper qualified under ch. 985, such publication to be not more than 20 days nor less than 10 days before the date set for the adjourned hearing.

History: 1979 c. 175 s. 50; 1993 a. 456; 1997 a. 250.

88.31 Special procedure in cases affecting navigable waters. (1) If it is necessary to enter upon any waters that may be navigable, or to acquire and remove any dam or obstruction from the waters, or to clean out, widen, deepen or straighten any stream that may be navigable, the board shall file with the department of natural resources an application for a permit to do the work. The board shall file with the application any information that the board or the department of natural resources considers necessary. The department shall specify by rule the information to be included in an application. The application shall state that the public health or welfare will be promoted by the removal of the dam or other obstruction or by the straightening, cleaning out, deepening or widening of the waters and that other public rights in and public uses of the waters will not be materially impaired. The application shall be duly verified.

(2) Upon receipt of the application the department of natural resources shall fix a time and place for a hearing on the application, not less than 3 nor more than 8 weeks from the date of filing, at a place convenient to the interested parties. If the application is for a permit to remove a dam, notice of the hearing shall be given to all interested persons as provided by s. 31.06. In all other cases, the department shall direct the applicant to give notice under s. 88.05 (2) (b) to the persons specified in s. 88.05 (4) (b).

(3) At the hearing on the application, all interested persons may appear and be heard. The department also may make an independent investigation of the situation.

(4) Upon the conclusion of the hearing and investigation, the department of natural resources shall grant the permit if it finds:

(a) That the public health and welfare will be promoted by the proposed removal of the dam or other obstructions or by the proposed straightening, cleaning out, deepening or widening of such waters; and

(b) That the proposed work is necessary to the proper operation of the proposed drainage system; and

(c) That the proposed work will not materially impair the navigability of any such waters and will not materially impair any other public right in or public uses of such waters. The enjoyment of natural scenic beauty is declared to be a public right to be considered along with other public rights.

(4m) The department of natural resources shall grant or deny the permit within 6 weeks after the conclusion of the hearing on the application.

(5) When granting a permit under this section the department of natural resources also shall establish the minimum level at which the affected waters may be maintained.

(6) The department of natural resources may require the applicant for the permit to submit a plan for the work to be done in the waters in question and may amend or modify such plan before approving it. The department may at any time, on the application of any interested person, further amend such plan when the same can be done without materially impairing the navigability of any such waters and without materially impairing any other public right.

(7) Upon granting a permit under this section, the department forthwith shall transmit to the secretary of the drainage board a

Electronic reproduction of 2009−10 Wis. Stats. database, current through 2011 Wis. Act 39 and July 25, 2011.

copy of the permit and the relevant findings, orders and approved plans.

(7m) The Duck Creek Drainage District is exempt from the permit requirements and procedures under subs. (1) to (7).

(8) Subject to other restrictions imposed by this chapter, a drainage board which has obtained all of the permits as required under this chapter and ch. 30 may:

(a) Do all acts necessary in and about the surveying, laying out, constructing, repairing, altering the course of, enlarging, clearing, deepening, widening, protecting and maintaining any drain in, through, or upon such waters, both within and beyond the limits of the drainage district; and

(b) Procure, purchase or condemn by proceedings had under ch. 32, riparian rights, rights of flowage, dams and waterpowers in such waters, both within and beyond the limits of the drainage district.

(9) In all cases a drainage district is liable to the owner of riparian rights, rights of flowage, dams and waterpowers for all property taken and for all damages which may be occasioned to such property by reason of any work done on it. Such damages shall be determined either by agreement, award of damages or condemnation proceedings and shall be paid by the drainage district before the work is done in the same manner in which payments are made where lands are acquired by railroad companies under condemnation proceedings.

History: 1993 a. 456; 1999 a. 9.

88.32 Report to the court. (1) Within 30 days after the final adjournment of the hearing provided for in s. 88.29, the board shall report in writing to the court:

(a) Whether the petition has the required number of signers;

(b) Whether the lands described in the petition will be improved by drainage;

(c) Whether other lands in the vicinity, draining to, from, or through the proposed drains, require drainage and if so a description of the same;

(d) Whether such drainage is feasible;

(e) Whether the public health or public welfare will be promoted by the proposed work;

(f) Whether the drains proposed in the petition will best accomplish the drainage prayed for and the area that should be drained;

(g) Whether the benefits from such work will exceed the cost of construction by the required amount;

(h) Such other facts as in the opinion of the board will aid the court in its decision upon the report.

(2) The board may recommend to the court an increase or decrease in the area proposed in the petition to be drained. If the proposed drains are not satisfactory the board shall recommend other drains.

(3) In determining whether public health and welfare will be promoted, the board shall include in its consideration whether the cumulative effect of such drainage over a period of time will affect the temperature of the water of lakes or streams, or will lower the water levels of lakes or streams or of the subterranean sources that supply private and public water systems, and whether the general need for the type of land that will be made available for cultivation or other purposes by such drainage is sufficiently great to warrant the possible harmful effects described above.

(3m) If the area of the proposed district exceeds 200 acres, the report shall be submitted to the department of agriculture, trade and consumer protection before it is filed with the court. Within 45 days after receipt of the report, the department shall return it with a copy of the report prepared under s. 88.11 (3) with its recommendation for approval or disapproval for the creation of the district.

(4) The board shall attach to its report proof of the service of notice of hearing on the petition together with a copy of its minutes of such hearing.

History: 1993 a. 246, 456; 2007 a. 121.

88.33 Drainage project may be stopped prior to organization of district. (1) At any time prior to the entry of the order organizing a drainage district, the owners who represent a majority of the lands described in the petition for drainage or who represent a majority of the lands contained in the report of the drainage board may file with the court a petition requesting that no further proceeding be had and that no further expense chargeable to the proposed drainage district be incurred.

(2) Upon receipt of the petition the court shall fix a time and place of the hearing on the petition and shall cause notice of the hearing to be given as provided in s. 88.05 (1) (b) to the persons specified in s. 88.05 (4) (b). If on the hearing the court finds that the petition is signed by the required number of owners, that notice of the hearing was properly given, and that the conditions of sub. (3) have been met, it shall enter an order directing that the proceedings to organize the district cease.

(3) As a condition of issuing the order under sub. (2), the court shall require those petitioners under this section who also were petitioners under s. 88.27 to pay the expenses of the hearing under this section and all expenses incurred to date in connection with the proceedings to organize the district.

History: 1993 a. 456.

88.34 Hearing by the court; organization of drainage district. (1) When the board has filed its report with the court, including any reports required by s. 88.11, the court shall fix a time and place of hearing on the report and shall cause notice to be given under s. 88.05 (1) (b) to the persons specified in s. 88.05 (4) (c).

(2) The order fixing the hearing may be in substantially the following form and a copy of the order may be served as notice of the hearing:

"Circuit court for .... County,

In the matter of the .... drainage.

Whereas a report has been filed in this court by the county drainage board recommending the drainage of the following described lands: (here describe the lands reported for drainage).

It is ordered that the report be heard and examined before this court on the .... day of ...., ... (year), at .... o'clock .... M. at the (here state the place of hearing) at which time and place all interested persons may appear and be heard. All objections must be in writing and comply with s. 88.07 (1).

Dated ....

....

Circuit Judge"

(3) The court shall make an order organizing the drainage district and direct the board to proceed with all convenient speed if on such hearing the court finds each of the following facts:

(a) That the petition or petitions have sufficient signers.

(b) That the lands described in the petitions together with any additional lands recommended by the board for drainage will be improved by the proposed work.

(c) That the public health or public welfare will be promoted thereby.

(d) That the cost of construction will not exceed 75% of the benefits to be derived from the proposed work.

(f) That the proposed work will not materially injure or impair fish habitat or wildlife habitat or scenic beauty or the conservation of natural resources or other public rights or interests.

(4) If the court finds the facts stated in sub. (3) (a), (b), (c) and (f) but finds that the cost of construction will exceed 75% of the

Electronic reproduction of 2009−10 Wis. Stats. database, current through 2011 Wis. Act 39 and July 25, 2011.

benefits to be derived from the proposed work, the court nevertheless shall organize the drainage district if, within 10 days, petitioners file with the court a bond with sufficient sureties to be approved by the court and conditioned for the payment of the excess or deposits and leaves with the court a sum of money that the court determines will cover the excess.

(5) Unless the conditions specified in sub. (3) or (4) are met, the court shall deny the petition and shall tax the taxable costs of the proceedings as provided in s. 88.08.

(6) The court may include in a proposed drainage district any lands requiring drainage and lying adjacent to the lands described in the petition and shall not lose jurisdiction by reason of bringing in lands not described in the petition.

(7) If there are petitions before the court to organize 2 or more drainage districts and the court is of the opinion that the territory in the proposed districts should be included in one district or in a lesser number of districts than the petitions call for, the court may by order organize such territory into such number of districts as it deems will best conform to the purposes of this chapter, or the court may annex any territory asking to be organized as a drainage district to a district already organized.

(8) The territory in a district need not be all in one body if:

(a) It is so situated that the public health or public welfare will be promoted by drainage of each separate body thereof; and

(b) The cost of construction in each separate body thereof will not exceed 75% of the benefits to be derived from the proposed work therein; and

(c) The court is satisfied that the proposed work can be more cheaply done or maintained in a single district than otherwise.

(9) The order organizing a drainage district shall be recorded with the register of deeds of each county in which lands of the district are located.

History: 1977 c. 135 s. 19; 1977 c. 449; 1989 a. 31; 1993 a. 301, 456; 1997 a. 250.

88.35 Laying out drains, assessment of benefits and award of damages in newly organized district. (1) Upon the organization of a drainage district, the board shall with the aid of an engineer having the qualifications specified in s. 88.21 (5):

(a) Lay out drains of sufficient depth to adequately drain the lands proposed to be drained, including the preparation of profiles showing the grades of all drains and a map showing the boundaries of the drainage district and the proposed location of all drains;

(b) Assess the benefits that will accrue to each parcel of land benefited;

(c) Award damages to such lands as will be damaged;

(d) Estimate the cost of construction;

(e) Assess the cost of construction against the benefited lands in proportion to the benefits received by each;

(f) Estimate the annual cost of maintenance and operation of the drainage district.

(2) In laying out the drains the board shall not be confined to the points of commencement, routes or end points of the drains or the number, extent or size of the drains, or the location, plan or extent of any drain as proposed by the petition under s. 88.28, but shall locate, design, lay out and plan the drains in the manner that seems best to the board to promote the public health or welfare and to drain or to protect the lands of the parties interested with the least damage and greatest benefit to all of the affected lands. In determining the sufficiency of the depth and capacity of the drains, the board shall consider whether other lands lie above and drain in the direction of, through and along the general course of the proposed drains.

(3) If the board finds that the drainage district, as described in the petition under s. 88.28, will not embrace all the lands that will be benefited by the proposed work or that it will include lands that will not be benefited or do not need to be included in the drainage district for any purpose, it may extend or contract the boundaries of the district so as to include or exclude all such lands using the procedures in s. 88.78 or 88.80.

(4) In assessing benefits to farm lands, the board shall ascertain and consider the depth, quality and character of the surface and subsoils, the thoroughness of drainage, the difficulty of drainage, the uses to which the land when drained will be adapted, and all other material elements entering into the increase in the value of such land resulting from the proposed work.

(5) If the damages to any land exceeds the assessment for cost of construction levied against such land the excess shall be paid out of the assessment for cost of construction levied against all lands.

(5m) If navigable waters are affected by the proposed drainage, the drainage board shall obtain a permit under s. 88.31. This subsection does not apply to the Duck Creek Drainage District.

(6) Upon the completion of its duties under subs. (1) to (5m), the board shall prepare a written report, including a copy of any maps, plans or profiles that it has prepared. The assessment of benefits and awards of damages shall be set forth in substantially the following form: [See Figure 88.35 (6) below]

(7) If the area of the district exceeds 200 acres, the report shall be submitted to the department of agriculture, trade and consumer protection. Within 45 days after its receipt, the department shall return it with a copy of the report prepared under s. 88.11 (3) and the department's approval or disapproval of the report prepared under sub. (6).

Figure 88.35 (6):

Description of land or name of corporation	Assessed benefits	Assessed for construction	Damages	Net assessment for construction
Section 6, Town	—	—	—	—
Range, SE 1/4 NE 1/4	$ 850.00	$ 425.00	$ 10.50	$414.50
Lot 1	400.00	200.00	—	200.00
Village of	2,500.00	1,250.00	666.00	584.00
B.G. & Q. Ry. Co.	1,000.00	500.00	600.00	—
Town of	—	—	150.00	—

History: 1979 c. 110; 1989 a. 31; 1993 a. 456; 1999 a. 9; 2007 a. 121.

88.36 Hearing on report. (1) Upon the completion of the report provided for in s. 88.35, the drainage board shall fix the time and place of the hearing on the report and shall cause notice of the hearing to be given under s. 88.05 (2) (b) to the persons specified in s. 88.05 (4) (c).

(2) At the hearing on the report the drainage board shall hear all objections to the report by any person who feels aggrieved.

(3) With regard to objections relating to assessment of benefits against or award of damages to specified lands, any evidence may be introduced which tends to establish what assessments or awards would be equitable as compared with other lands in the district.

(4) If the drainage board finds that the report requires modification or amendment, it shall modify or amend the report as the facts warrant.

(5) Upon a determination by the board that the report is final, the board shall proceed with the work as provided in s. 88.62.

(6) The board may not proceed with the work unless it finds that the cost of construction of the work necessary under the order

Electronic reproduction of 2009−10 Wis. Stats. database, current through 2011 Wis. Act 39 and July 25, 2011.

will not exceed 75% of the total assessment of benefits against those lands whose assessments of benefits and awards of damages are sought to be confirmed by the order.

History: 1977 c. 135 s. 19; 1993 a. 456; 1995 a. 225.

SUBCHAPTER IV

GENERAL RULES APPLICABLE TO ASSESSMENTS

88.40 Assessments for costs to be certified to register of deeds; assessments are lien on lands. (1) Immediately after the issuance of a drainage board order levying any assessments for costs, whether original or supplemental, the drainage board shall record in the office of the register of deeds in each county in which the assessed lands are situated a certified copy of the order, including a true description of each parcel of land in that county that was so assessed and the amount that it was assessed.

(2) From the time of recording the order confirming such assessments for costs until they are paid, such assessments and the interest thereon are a first lien upon the lands assessed and take priority over all other liens or mortgages except liens for general taxes and liens under ss. 292.31 (8) (i) and 292.81, regardless of the priority in time of such other liens or mortgages.

(3) When any assessment which is a lien on land has been fully paid, the board shall execute in writing a satisfaction of such lien. Such satisfaction may be recorded in the office of the register of deeds.

History: 1993 a. 453, 456; 1995 a. 227; 1997 a. 27.

88.405 Assessment for connection to district drain. When any new drain is connected to an existing district drain, whether or not the area drained by the new drain is within the drainage district, the drainage board by order may assess against the newly drained land a reasonable share of the cost of constructing the existing district drain. If an assessment is made under this section and the area drained by the new drain is not within the drainage district, the drainage board shall proceed under s. 88.78 to annex the land to the drainage district.

History: 1993 a. 456.

NOTE: 1993 Wis. Act 456, which creates this section, contains extensive explanatory notes.

88.41 Payment of assessments for costs. (1) All assessments for costs are due and payable 4 months after the date on which the order making the assessments is issued unless the drainage board by order directs that the assessments may be paid in installments. Assessments shall be paid to the county treasurer as treasurer of the drainage district.

(2) At the time of issuing an order making assessments for costs, or at any time after issuance of the order but before the issuance of bonds or notes which are a lien on the assessments, the drainage board may order the assessments for costs to be payable in annual installments. The drainage board shall order the installments to be payable in such amounts and at such times as will be convenient for the accomplishment of the proposed work or for the payment of the principal and interest of the notes or bonds of the drainage district, subject to the following limitations:

(a) The number of annual installments may not exceed 15 in the case of assessments for cost of construction or 3 in the case of assessments for cost of repairs.

(b) The first installment is due and payable on September 1 following the drainage board's order directing payment in installments and one installment, together with all accrued interest, is due and payable on September 1 of each succeeding year, except that the drainage board in its order may direct a delay in the commencement of the payment of installments for the cost of construction to September 1 of some year not more than 5 years after September 1 of the year in which the first payment otherwise would be due.

(3) Any owner of land assessed for costs may, at any time before the board contracts to borrow money upon notes or bonds based upon such assessment, pay to the county treasurer as treasurer of the drainage district the amount of the assessment against the owner's land or any tract thereof, together with any interest due thereon.

(4) The following rules govern interest on assessments for costs:

(a) All assessments for costs shall draw interest at the rate of 6% per year unless the drainage board orders a different rate.

(b) Interest shall run from the date of confirmation of the assessment unless the drainage board orders the interest to commence at a later date, but interest shall be waived if the assessment is paid within 60 days after the date of confirmation.

(c) If installment payments have been authorized pursuant to sub. (2), interest shall be computed as of September 1 and is payable annually on that date.

(e) Interest shall be collected in the same manner as the principal of the assessment.

(f) If it becomes necessary to certify past due assessments to the clerk of the town, village or city for collection, the provisions of s. 88.42 relating to interest also are applicable.

History: 1979 c. 110 s. 60 (13); 1991 a. 316; 1993 a. 456; 1997 a. 27.

88.42 Unpaid drainage assessments to be collected as taxes. (1) The secretary of the drainage board shall, in accordance with s. 88.19, keep a separate record of all assessments in each drainage district under the board's jurisdiction. On or before December 1 of each year, the secretary shall certify all past due assessments for costs, including past due installments, to the clerk of the town, village or city in which the delinquent lands are located or assessed, specifying the amount due from each tract, parcel or easement. The amount certified shall include interest at the rate of 6% per year computed through December 31 of the current year.

(2) Each town, village and city clerk shall insert in the tax roll for each year, but in a column separate from the general tax, the amounts certified to that clerk by the secretary of the board under sub. (1). Such assessments and interest shall be collected in the same manner as general taxes, except that the personal property of natural persons and private corporations, and all lands except those against which assessments were made, are not liable to seizure and sale therefor.

(3) In case of failure to certify or collect the unpaid assessments in any one year or if mistakes are made in certifying or collecting assessments, the same may be certified, corrected and collected in any subsequent year.

(4) All drainage assessments collected by the city, village or town treasurer shall be settled under s. 74.23, 74.25 or 74.30 with the county treasurer of the county in which the drainage board with jurisdiction of the district is located, and the city, village or town treasurer shall obtain and file the proper receipt for the assessments. The county treasurer shall promptly credit the amounts received under this subsection to the drainage districts entitled to the amounts.

History: 1979 c. 110 s. 60 (13); 1987 a. 378; 1991 a. 316; 1993 a. 456; 1995 a. 225.

88.43 Collection of assessments as delinquent taxes. (1) If the amounts certified to the town, village or city clerk under s. 88.42 are not collected by the town, village or city treasurer, such treasurer shall return them to the county treasurer, in the same manner and at the same time as delinquent taxes, but separately therefrom. The county treasurer shall collect unpaid drainage assessments under subch. VII of ch. 74.

(4) Unless in conflict with this chapter, the rules of law in chs. 74 and 75 which are applicable to the collection of general taxes apply to the collection of delinquent drainage assessments.

History: 1987 a. 378; 1989 a. 56.

2009−10 Wis. Stats. database updated and current through 2011 Wis. Act 39 and July 25, 2011. Statutory changes effective on or prior to 9−1−11 are printed as if currently in effect. Statutory changes effective after 9−1−11 are designated by NOTES. See Are The Statutes on this Website Official?

Electronic reproduction of 2009−10 Wis. Stats. database, current through 2011 Wis. Act 39 and July 25, 2011.

88.44 Contesting validity of assessments. (1) If an interested person petitions the drainage board for review of the validity of any order assessing benefits or costs, correcting omitted assessments, reassessing benefits or apportioning benefits upon division of a parcel, the drainage board shall fix a time and place of hearing and require all interested persons to show cause why the assessment should be modified. The order to show cause shall be served as provided in s. 801.11 upon such persons as the court directs.

(2) Any person objecting to the validation of the assessment shall, on or before the day fixed for the hearing, file a written statement of the person's objections with the drainage board. The drainage board shall hear the objections at the time fixed for the hearing and shall enter an order directing all necessary amendments and curing all defects in the former proceedings or shall render valid and binding the former order.

(3) No drainage assessment is void or voidable for irregularity in the proceedings unless it is shown that the assessment is inequitable.

(4) An interested person shall submit a petition under sub. (1) and obtain either the decision of the drainage board under this section or a denial of the petition for a hearing before seeking judicial review of the drainage board's order levying an assessment.

History: 1991 a. 316; 1993 a. 456.

88.45 Procedure upon discovering omitted assessments. (1) Upon learning of an omission to assess benefits or to assess costs or to award damages to any lands in a district, the board shall issue an order making the assessments or awards that the board considers just.

(2) No omission to assess benefits or to assess for costs or to award damages to any lands in a district renders any assessment in the district voidable.

(3) This section is retroactive.

History: 1993 a. 456.

88.46 Reassessment of benefits. (1) At any time after the expiration of 5 years from the order of the board assessing benefits in a drainage district, owners of land in the district may petition the drainage board for a reassessment of benefits on the ground that the original assessment of benefits is inequitable and unjust. The petition shall be signed by at least one−tenth of the owners of land within the district or by the owners of at least one−tenth of the lands within the district.

(2) Upon receipt of a petition meeting the requirements of sub. (1), the board shall either schedule a hearing on the matter to be held within 60 days after receiving the petition or issue an order denying the petition within 60 days after receiving the petition. If it appears to the board that the original assessment of benefits throughout the drainage district was uniformly low or substantially so, by reason of the application of a substandard evaluation or other cause, the board shall issue an order adjusting all benefits in the district so as to correct the inequities and injustices.

(4) A reassessment under this section supersedes all prior assessments of benefits, subject in every case to s. 88.02.

History: 1979 c. 110 s. 60 (11); 1993 a. 456.

88.47 Apportionment of assessments when assessed parcel is divided. If any tract of land which has been assessed benefits as a unit subsequently is divided into smaller parcels, the board shall issue an order to apportion the assessment, and any unpaid assessment for costs based thereon, among the several divisions in a manner that is equitable.

History: 1977 c. 449; 1993 a. 456.

88.48 Assessment of county and municipal lands. (1) Lands owned by a county, town, village or city may be assessed benefits, awarded damages and assessed for costs the same as other lands within the district. Notice of hearing on the report assessing benefits against such lands shall be served on the clerk of the county, town, village or city in the same manner as upon resident landowners.

(2) As assessments for costs levied against any city, village, or town become due, the board shall certify the assessments to the clerk of the city, village, or town, and the clerk shall place them upon the next tax roll. If the assessments exceed one−fourth of one percent of the assessed value of the property in the city, village, or town for the last previous assessed valuation, the assessments shall be paid in installments of one−fourth of one percent of the valuation for each year until paid unless the drainage board orders them paid in smaller amounts.

History: 1993 a. 456; 2009 a. 177.

A town sanitary district is subject to assessment by a drainage board. State ex rel. Town of Norway v. Racine County Drainage Board, 220 Wis. 2d 595, 583 N.W.2d 437 (Ct. App. 1998), 97−2861.

88.49 Assessment of one district by another; judgment against district. If one district, by order of the drainage board, has assessed another district for special benefits, or if a money judgment has been rendered against any district, the board shall assess upon the lands of the district that is liable a sum that is sufficient to pay the assessment or judgment. The drainage board may order that the assessment be payable in installments.

History: 1993 a. 456.

88.50 When state lands subject to assessment; right−of−way across state lands. (1) Agricultural lands owned by the state are subject to assessment in drainage proceedings. Other lands owned by the state are not subject to such assessment. Whenever the state acquires lands against which drainage assessments have been made and which no longer will be subject to assessment, the state shall pay the district all unpaid assessments against such lands, whether due or not. The secretary of the board then shall remove the lands from the district's assessment roll. Acquisition of such lands by the state shall not be construed as prohibiting maintenance of existing drains.

(2) No drain may be constructed on lands owned by the state or on lands on which the state exercises management control by easement, lease or otherwise, without the written permission of the agency responsible for the lands. The agency shall grant such permission upon application made to it, unless it finds after notice and public hearing thereon that the proposed drain will be injurious to the use of the property for the purposes for which it was acquired by the agency. Any administrative decision on the application, or any findings or order of the agency after public hearing, made hereunder shall be subject to review under ch. 227.

History: 1993 a. 490.

SUBCHAPTER V

BORROWING MONEY; REFINANCING; COMPROMISE OF DEBTS

88.54 Borrowing money. (1) At any time after the filing of a petition for organization of a drainage district but before the court issues an order organizing the drainage district, the drainage board may, with the consent of the court, borrow money in the name of the proposed drainage district to defray the expenses of organization.

(2) The board may borrow money in an amount not exceeding the then unpaid assessments for costs, for the purpose of paying any or all obligations of a drainage district or for refunding existing notes or bonds. The board may secure the indebtedness by notes or bonds of the district, bearing interest at a rate approved by the board and running not beyond one year after the due date of the last installment of the assessments on account of which the money was borrowed. The notes and bonds constitute a lien upon all confirmed assessments for costs that are unpaid at the time the notes are given or bonds issued. Board members are not personally liable on the notes or bonds.

Electronic reproduction of 2009−10 Wis. Stats. database, current through 2011 Wis. Act 39 and July 25, 2011.

(3) If the board desires to borrow money upon the notes or bonds of a drainage district to be paid during a series of years and after the lapse of a period of not more than 3 years, the board shall first publish a class 2 notice, under ch. 985, to invite proposals to furnish the money desired at the most favorable rate of interest or, if notes or bonds are issued at a specific rate of interest approved by the board, proposals to purchase the notes or bonds at the best premium. If the advertisement is made without success and if the board is unable to sell the notes or bonds at par or above, the board may sell the notes or bonds at private sale at the best price it can obtain for them.

(4) If at any time the board finds that a district does not have or will not have sufficient funds on hand to pay any lawful indebtedness of the district when the indebtedness becomes due, or if any extraordinary emergency requires borrowing, the board may borrow money to pay the indebtedness or meet the emergency. If the amount to be borrowed does not exceed $8,000 and the loan does not run beyond one year, the board may borrow the money without holding a hearing. In other cases, s. 88.065 applies. When necessary, additional assessments to pay the loans shall be made under s. 88.23.

(6) Except in the case of refunding bonds, no evidence of indebtedness of a district running for more than one year is valid unless approved by the attorney general and unless it bears a statement showing the approval.

(7) The board shall keep a record of all bonds and notes issued on behalf of a district. Such record shall show with respect to each bond and note the number, series, date, principal, rate of interest and date of maturity thereof, the date when interest is due thereon and any payments made. If a bond or note is refunded it shall be marked "Refunded by No. ....". The board shall execute all bonds or notes it offers to the public that mature after more than one year as provided in s. 67.08 (1) and may register these bonds or notes under s. 67.09.

History: 1983 a. 24; 1987 a. 275; 1991 a. 316; 1993 a. 456.

88.55 Refunding district obligations. (1) The drainage board may refund bonds of the district and issue new bonds of the district payable over a term determined by the board. The aggregate principal amount of the new bonds shall not exceed the aggregate principal amount of the refunded bonds and the unpaid accrued interest on them. The new bonds shall bear interest at a rate approved by the board.

(2) When bonds of the district have been refunded or are about to be refunded under sub. (1), the board may, on petition of one or more landowners or of the board, extend the time in which to pay assessments for construction to September 1 next preceding the due date of a like portion of the refunding bonds which are liens thereon. In such event, the face of all unpaid past due assessments so extended, together with all interest, penalties and charges, shall be a lien on the lands against which the assessments were originally made. The board may make all orders and do all other things necessary to carry into effect the extension of time.

History: 1993 a. 456.

88.56 Compromise and discharge of obligations. (1) Whenever a drainage district is unable to pay its bonds and notes in full, the board may enter into a written compromise agreement with the owners of not less than 70% of its obligations. When such agreement has been signed by members of the board and the owners of 70% of such obligations, all creditors of the district are subject to such agreement to the same extent as those signing the agreement, and their claims shall be treated in all respects as if they had executed such agreement.

(2) Whenever a drainage district is unable to pay its obligations in full, the board may file with the court a petition for an order approving a settlement of claims and directing an equitable distribution of net assets among the creditors of the district. Such petition shall list the available assets of the district, the obligations of the district, the owners of such obligations and their names and addresses or, if unknown, a statement of that fact, and shall state whether a compromise agreement has been executed under sub. (1). If such agreement has been executed, a copy thereof shall be attached to the petition.

(3) Upon receiving a petition under sub. (2), the court shall enter an order fixing a time not less than 4 months nor more than 6 months after receipt of the petition within which creditors shall present their claims for examination and allowance. The order shall also fix a time and place for hearing on claims and publication and notice shall be given under s. 88.05 (1) (b) to all creditors of the district whose names and addresses are known.

(4) The court shall receive, examine and adjust all claims and demands against the district. At the time set for hearing on claims, any claim may be allowed which is accompanied by a statement of account verified by affidavit and to which no objection is received, except that no claim shall be allowed until the court is satisfied that it is just.

(5) The court shall make a statement embracing a list of the claims presented against the district and those presented as a set−off. Such statement shall show how much was allowed and how much disallowed in each case, together with the final balance, whether in favor of the creditor or the district. Such statement shall be filed by the judge and shall stand as the judgment of the court. The court may make an order directing that the available balance of the funds of the district, after costs are paid, be distributed among the district's creditors as equity requires and discharging the district from further liability on its obligations.

(6) All claims against a district which are not filed within the time limited by this section are barred.

History: 1993 a. 456.

88.61 Laying out drains, assessment of benefits and award of damages in existing drainage district. After the organization of a drainage district and the construction of drains under the procedures in ss. 88.35 and 88.36, if the drainage board proposes to construct additional drains in the existing drainage district, it shall prepare reports, assess benefits and damages, conduct a hearing and determine costs and benefits substantially as provided under ss. 88.35 and 88.36.

History: 1993 a. 456.

NOTE: 1993 Wis. Act 456, which creates this section, contains extensive explanatory notes.

SUBCHAPTER VI

CONSTRUCTION, MAINTENANCE AND IMPROVEMENT OF DRAINS

88.62 Conditions relative to doing of work. (1) The drainage board may authorize the drainage district to do its own work or the board may enter into contracts to have the work done. The board may advertise for bids and shall do so in all cases where the work to be done will cost in excess of $25,000. When the board is required to advertise for bids, the board shall publish a class 2 notice, under ch. 985, and other notices that the board considers appropriate, and the work shall be let to the lowest responsible bidder unless in the board's opinion the bid is unreasonably high and a lower bid can be obtained. The board may continue the letting of the work from time to time, and may reject any or all bids.

(2) Before the board or its contractor may enter on lands for the construction of any drain on the lands, any damages awarded to the owners of the lands in excess of assessments against the lands for the cost of construction must have been paid or tendered. If the owner is unknown or the board for any other reason cannot safely pay the owner, it may deposit the net damages in an escrow account for the benefit of the owner or other party who is entitled to the damages, to be paid or distributed when payment can be made to the owner or other party or released after 5 years, whichever occurs first. Notwithstanding ch. 177, any funds not claimed in 5 years may be retained by the drainage board for the benefit of

Electronic reproduction of 2009−10 Wis. Stats. database, current through 2011 Wis. Act 39 and July 25, 2011.

the drainage district for which the funds are held, after the board publishes a class 2 notice under ch. 985 and mails notice to the last−known address of each owner or other party regarding the existence of the unclaimed funds. The payment has the same effect as a tender to and acceptance of damages by the person entitled to the damages.

(3) (a) If drainage work is undertaken in navigable waters, the drainage board shall obtain a permit under s. 30.20 or 88.31 or ch. 31, as directed by the department of natural resources, except as provided in par. (b).

(b) If drainage work is undertaken in navigable waters located in the Duck Creek Drainage District, the board for that district shall obtain a permit under s. 30.20 or ch. 31, as directed by the department of natural resources.

History: 1987 a. 275; 1991 a. 316; 1993 a. 456; 1999 a. 9; 2007 a. 122.

88.63 Maintenance and repair of drains. (1g) In this section "maintenance and repair" refers to the restoration of a drain or any part thereof as nearly as practicable to the same condition as when originally constructed or subsequently improved, including resloping of open ditches and leveling of spoil banks or excavated materials, and such routine operations as from time to time may be required to remove obstructions and preserve the efficiency of the drains. The terms do not include any substantial or material alteration, enlargement or extension of the drainage system of the district.

(1m) It is the duty of the drainage board to maintain in good condition the drains in all districts under the board's jurisdiction and to repair such drains when necessary. The board shall have all drains under its jurisdiction inspected annually to determine the need for maintenance and repair work. The board shall apportion the cost of such inspection to the various districts involved and the cost shall be paid out of any funds of the district available for maintenance and repair. The board may hire an inspector or authorize one or more owners of land in the drainage district to make the inspection or members of the board may themselves make the inspection.

(2) The board shall establish a fund for the payment of costs of maintenance and repair. Whenever the amount of the fund falls below an amount equivalent to 5% of the confirmed benefits currently in effect in the district, the board shall levy an additional assessment under s. 88.23 for maintenance and repair. Assessments for costs of maintenance and repair shall be apportioned on the basis of the confirmed benefits then in effect in the district but may be made notwithstanding the fact that assessments of benefits in the district may have been exhausted by previous assessments for other costs. Assessments for costs of maintenance and repair, including costs incurred and per diems earned by board members under sub. (1m), are not limited by the extent of unexhausted assessments of benefits in the district and shall not be counted in determining whether there are unexhausted assessments of benefits against which assessments for costs other than those authorized by this section may be made.

(4) The drainage board may use the funds assessed for maintenance and repair to pay for the costs of undertaking or defending a lawsuit involving the board, a board member or a drainage district or for representing an owner of land in a drainage district as provided in s. 88.21 (13). The board shall allocate the costs to individual drainage districts in an equitable manner.

History: 1993 a. 456; 2001 a. 103.

Chapter 30 applies to navigable ditches that were originally navigable streams. If a navigable ditch was originally nonnavigable or had no previous stream history, the department's jurisdiction depends upon the facts of each situation. Section 31.33 applies to nonnavigable artificial waterways insofar as is necessary to protect navigable waters and owners of flooded waters. 63 Atty. Gen. 493.

88.64 Assessment against municipalities for enlargement or maintenance of drains. (1) In this section:

(a) "Enlarge" means to increase the capacity of a drain to convey water, including adding facilities such as pumps or lift stations, by performing any necessary construction.

(b) "Municipality" means a city, village or town.

(2) A drainage board may assess a municipality with territory upstream from any drain for any costs of enlarging or maintaining the drain that are attributable to increased water flow from land within the municipality. If the drainage board assesses a portion of the costs of enlarging or maintaining a drain against a municipality, the drainage board shall use the procedure under this section.

(3) The drainage board shall obtain a report prepared by a professional engineer who is selected from the list specified in s. 88.21 (5). The report shall include all of the following:

(a) The construction and costs that are necessary to restore the drain so that it conveys the same amount of water as when most recently constructed or enlarged.

(b) The construction and costs that are necessary to enlarge the drain to convey the flow of water from any land in the drainage district or upstream from the drainage district that has been newly drained since the drain was most recently constructed or enlarged.

(c) The construction and costs that are necessary to enlarge the drain to convey the flow of surface water from upstream sources that represents an increase in flow since the drain was most recently constructed or enlarged.

(d) Of the increased flow identified in par. (c), the amount of that flow that is attributable to each municipality with territory in the watershed above the drain, based proportionally on all of the following:

1. The increased flow into the drain from impermeable surfaces such as roads, parking lots or roofs since the drain was most recently constructed or enlarged, whether or not the impermeable surfaces are within the watershed.

2. The increased flow into the drain from the discharge of wastewater from a sewage treatment plant since the drain was most recently constructed or enlarged, whether or not the source of the wastewater is within the watershed.

(e) The maintenance costs that are attributable to the flow of surface water from upstream sources that represents an increase in flow since the drain was most recently constructed or enlarged.

(4) Upon completion of the report under sub. (3), the drainage board shall set a time and place for a hearing on the report and shall give the notice under s. 88.05 (2) (b) to the persons specified in s. 88.05 (4) (c) and to the clerk of each municipality identified in the report as responsible for a portion of the costs of enlarging or maintaining the drain. At the hearing on the report, the drainage board shall hear all objections to the report by any aggrieved person. Representatives of a municipality may introduce evidence that tends to establish a different allocation of costs. If the drainage board finds that the report requires modification or amendment, it shall modify or amend the report as the facts warrant.

(5) At the conclusion of the hearing and after completion of the final report, the drainage board shall issue an order directing each municipality to pay the portion of the cost of enlarging or maintaining the drain as determined in the report. If the drainage board orders or allows landowners in the drainage district to pay for the costs of enlarging or maintaining the drain in installments, the drainage board shall permit a municipality to pay the assessment in installments. The drainage board shall mail the order to the clerk of each municipality by certified mail.

(6) Any municipality affected by the order may, within 120 days after receipt of the order under sub. (5), request the state drainage engineer to review the final report and order of the drainage board. The state drainage engineer shall complete the review of the final report and order within 120 days after receiving the request from the municipality. The state drainage engineer shall issue a report on whether the drainage board order complies with the report prepared under sub. (3), including a recommendation that the drainage board affirm, modify and affirm or reverse the order. The state drainage engineer shall mail a copy of the report and recommendation to the drainage board and to each municipality that is subject to an order under sub. (5). Upon receiving the

2009−10 Wis. Stats. database updated and current through 2011 Wis. Act 39 and July 25, 2011. Statutory changes effective on or prior to 9−1−11 are printed as if currently in effect. Statutory changes effective after 9−1−11 are designated by NOTES. See Are The Statutes on this Website Official?

Electronic reproduction of 2009−10 Wis. Stats. database, current through 2011 Wis. Act 39 and July 25, 2011.

state drainage engineer's report and recommendation, the drainage board shall promptly issue an order to affirm, modify and affirm or reverse its previous order and mail the order by certified mail to the clerk of each municipality affected by the order and the state drainage engineer. The municipalities that request the state drainage engineer to review the report and order shall jointly pay the actual and necessary costs of the review and the payment shall be credited to the appropriation under s. 20.115 (7) (ga).

(7) A municipality affected by a drainage board order issued under sub. (5) or (6) may seek review of the order under s. 88.09, except that a municipality may commence the action within 120 days after receiving the order.

(8) If a municipality pays the costs assessed by an order issued under sub. (5) or (6), it shall pay the costs or make the first payment of the costs on the February 15 following adoption by the municipality of its next annual budget after the order is issued.

History: 1993 a. 456.

NOTE: 1993 Wis. Act 456, which creates this section, contains extensive explanatory notes.

88.66 Construction and repair of drains crossing railroad right−of−way. (1) If necessary for proper drainage, the board may lay out and construct drains across any railway right−of−way within a district. As soon as the drain has been constructed up to such right−of−way, the railway company shall open its right−of−way and permit such drain to cross the same.

(2) Every district whose drains cross the right−of−way of a railway company is liable to such company for the reasonable cost of opening its right−of−way and also for the cost of the culverts and bridges made necessary by such drain. The drainage board shall include such costs in its cost of construction, as set forth in its report of benefits and damages, and shall award them as damages to the railway company. The bridge or culvert shall be designed by the district's engineer and the design submitted to the railway company for approval. If a dispute arises as to the adequacy of the design, either party may submit the dispute to the office of the commissioner of railroads by filing with the office a statement as to the facts involved and the nature of the dispute. The office shall investigate and determine the matter in controversy in accordance with ch. 195, and any order it makes in such proceeding has the same effect as an order in any other proceeding properly brought under ch. 195.

(3) (a) Whenever the cleaning out, deepening or reconstruction of a drain crossing a railway right−of−way requires the lowering of a culvert through such right−of−way in order to provide effective drainage, the drainage board shall proceed as provided in subs. (4) to (7). Except as provided in par. (b), the expenses involved in such lowering shall be borne by the drainage district or as provided by mutual agreement between the railway company and the drainage board.

(b) Whenever a railroad is being constructed or reconstructed across a drainage district's drain, or a culvert in such drain is being replaced, the railway company shall consult with the drainage board having jurisdiction of such district for the purpose of determining the depth at which such drain was laid out. If any culvert or similar opening in a railway right−of−way is installed at a grade higher than the depth at which such drain was laid out, the expenses involved in any future lowering of the culvert pursuant to par. (a) shall be borne by the railway company unless the company was misled by the drainage board as to the proper grade at which to install the culvert. This paragraph applies only to work done after June 13, 1964.

(4) Whenever it becomes necessary to open a railway right−of−way in order to permit cleaning out or repairing any district drain, the board shall ascertain the reasonable cost thereof and, except as otherwise provided in sub. (3), shall award such cost as damages to the railway company in the board's report when assessing the cost of repairs.

(5) Upon receiving 30 days' notice in writing, any railway company across whose right−of−way any drainage district drain is laid out shall open its right−of−way to permit the board and its contractors, agents or employees to construct, clean out or repair such drain.

(6) If the railway company fails to open its right−of−way as required by this section, the board may at any time after the expiration of 30 days from the giving of the notice specified in sub. (5) open such right−of−way along the lines of such drains and construct, clean out or repair the same and may recover from the railway company the reasonable expense of opening the right−of−way.

(7) The district constructing, cleaning out or repairing a drain across the right−of−way of a railway company shall so prosecute the work as not to delay traffic upon such railway for longer than is absolutely necessary.

History: 1977 c. 29 s. 1654 (9) (f); 1981 c. 347; 1993 a. 16, 123, 490.

88.67 Construction and repair of drains crossing utility installations; laying utility installations across drains. (1) Whenever the construction, reconstruction, clean out or repair of a drain makes necessary the removal or raising of a utility installation in order to permit the passage of a dredge or other machinery or whenever the lowering of an underground utility installation is necessary in order to provide effective drainage, the owner of the utility installation, upon being given 30 days' written notice stating the place where such dredge or machinery will pass or that lowering is necessary to provide effective drainage, shall remove, raise or lower the utility installation as requested by the board. Except as provided in sub. (3), the expenses involved in such removal, raising or lowering shall be borne by the drainage district or as provided by mutual agreement between the drainage board and the owner of the utility installation.

(2) If after the 30 days' notice specified in sub. (1) the owner of the utility installation fails to remove, raise or lower the same, the board may do so and may recover from the owner of the installation the cost of the removal, raising or lowering.

(3) Whenever an underground utility installation is being laid or relaid across a drainage district's drain, the owner of the utility installation shall consult with the drainage board having jurisdiction of such district for the purpose of determining the grade at which such drain was laid out. If an underground utility installation is laid at a grade higher than the grade at which the drain was laid out, the expenses involved in any future lowering of the utility installation shall be borne by the owner of the utility installation unless the owner was misled by the drainage board as to the proper grade at which to lay the utility installation. This subsection applies only to work done after June 13, 1964.

(4) In this section "utility installation" includes any sluice or pipe carrying any gas or liquid, or any wire, conduit or cable used for conducting electricity or for any other purpose, whether or not such installation is owned by a public utility.

88.68 Construction of drain across public highway; construction of bridges across drains. (1) Any drain across a public highway shall be constructed according to like specifications and at the same time as the drain above such highway is constructed.

(2) If the construction of a drain across a public highway makes necessary the construction or reconstruction of a bridge, the drainage board and the officers in charge of maintenance of the highway shall try to agree on the best method of constructing or reconstructing the bridge. If they are unable to agree, the matter shall be submitted to arbitration under ch. 788. If it is determined to reconstruct or add to the bridge, the district shall pay the costs incident to the reconstruction or addition. If it is determined to construct a new bridge, the drainage district shall pay to the unit of government responsible for the maintenance of the highway a sum that is considered equivalent to the value of the bridge in place at the time of the construction of the drain.

Electronic reproduction of 2009−10 Wis. Stats. database, current through 2011 Wis. Act 39 and July 25, 2011.

(3) If the unit of government in charge of maintenance of a highway decides to construct a new bridge across a drain, the officers in charge of such construction shall notify the drainage board thereof by registered mail addressed to the secretary of the board. If the board within 10 days after receiving such notice notifies the officers in charge of construction of the bridge that it desires such bridge to be constructed with a certain clear span, the bridge shall be constructed in accordance with the board's order. If the board's order requires the bridge to be built of greater span than is necessary for proper drainage of flood waters, any excess cost resulting from such order shall be paid by the drainage district.

(4) Whenever the cleaning out, deepening or reconstruction of a drain crossing a public highway requires the lowering of a culvert through such highway in order to provide effective drainage, the drainage board may proceed to lower such culvert only after obtaining a permit under s. 86.07 (2). In lieu of issuing a permit, the authority in charge of maintenance of the highway may proceed to do the work itself. Except as provided in s. 86.075, the expenses involved in such lowering shall be borne by the drainage district, or as provided by mutual agreement between the highway authority and the drainage board.

History: 1993 a. 456.

88.69 District liable for damage to land outside its boundaries. (1) A drainage district is liable for any damages resulting to lands outside its boundaries because of work done within its boundaries. In this subsection "damages" means only such damages as could be recovered against a natural person for like injury resulting from like work. No action shall be taken to collect damages to outside lands until the damages actually have resulted. In cases of construction of new drains, the state may proceed pursuant to ch. 813 to prevent damage or injury to lands owned by the state.

(2) If through the construction of a drain by a higher district a lower drainage district incurs extra expense in providing means to carry off the waters or remove the sediment flowing from the higher district, the higher district is liable for such increased cost. The amount of such increased cost may be agreed upon between the districts or may be recovered in an action at law.

History: Sup. Ct. Order, 67 Wis. 2d 585, 774 (1975).

88.70 Formation of subdistrict to obtain more thorough drainage. (1) If the owners of land in a part of a drainage district desire a more thorough or different drainage than the drains of the district currently provide or than the planned reconstruction will provide, a majority of the owners may petition the board to have specified lands set aside as a subdistrict of the drainage district in order to permit a more thorough or different drainage.

(2) The board shall fix a time and place of a hearing on the petition and shall cause notice to be given under s. 88.05 (2) (b) to the persons specified in s. 88.05 (4) (b).

(3) If the drainage board is satisfied that the public health or public welfare will be promoted by more thorough or different drainage and that the benefits of the drainage will exceed the cost of construction, the drainage board shall order that a subdistrict of the drainage district be formed, give it a name or number and fix its boundaries.

(4) After organizing the subdistrict, the board shall prepare a plan and specifications for the more thorough or different drainage, estimate the cost of construction of the drainage, estimate the cost of all additional bridges made necessary because of the drainage, and assess benefits against and award damages to all lands in the subdistrict that are benefited or damaged by the more thorough or different drainage. Assessments and awards shall be made substantially as provided in s. 88.35.

(5) Nothing in this section is intended to relieve owners of lands in the subdistrict of the proportionate share of their obligations to the district in which the subdistrict was formed.

History: 1993 a. 456.

88.71 Enlarging or supplementing existing drains. (1) Whenever the board is petitioned by the owners of one−tenth of the lands in a district to enlarge existing drains or to lay out and construct new drains in such district, or whenever the board is of the opinion that the plan of drainage of the district is or will be insufficient to effect a thorough drainage of such district or any portion thereof, and that enlarged or supplemental drains are required to effect such drainage, the board shall cause to be prepared plans and specifications for the enlargement of existing drains or for the construction of sufficient supplemental drains to complete the drainage of such district.

(1m) If the drainage board is satisfied that the public health or welfare will be promoted by the enlarged or supplemental drains and that the benefits from the drains will exceed the cost of construction, the drainage board shall order the construction of the enlarged or supplemental drains.

(2) The board shall estimate the cost of construction of the enlargements or supplemental drains together with the cost of all additional bridges that the district must build and shall assess the costs against the lands benefited, as provided in ss. 88.35 and 88.36 and in this subsection. The board shall award to each parcel of land the damages caused to the land by the supplemental work and shall assess benefits against the lands benefited by the supplemental work. The benefits shall be apportioned and assessed so that all assessed lands are required to pay a sum total for the construction of the total drainage proportionate to the actual benefits received by the lands from the total drainage.

History: 1993 a. 456.

88.72 Removal of dams or other obstructions in drainage outlets. (1) The owners of more than one−tenth of the lands within any district may file with the drainage board a petition setting forth:

(a) That the drains constructed within such district do not afford an adequate outlet for drainage;

(b) That it is necessary in order to give an adequate outlet to remove certain dams or other obstructions from waters or streams or to deepen, straighten or widen the same either within or beyond the boundaries of such district; and

(c) That the public health and the public welfare will be promoted by such work and that the navigability of such waters or streams and other public rights therein will not be materially impaired.

(2) Upon receiving a petition under sub. (1), the drainage board shall fix a time and place of a hearing on the petition and shall cause notice of the hearing to be given under s. 88.05 (2) (b) to the persons specified in s. 88.05 (4) (a), to the owner of any dam sought to be removed and to all riparian owners affected by the removal.

(3) At the hearing on the petition, any interested person may appear and contest its sufficiency and the necessity for the work. If the drainage board finds that the petition has the proper number of signers and that to afford an adequate outlet it is necessary to remove dams or other obstructions from waters and streams which may be navigable, or to straighten, clean out, deepen or widen any waters or streams either within or beyond the limits of the district, the board shall obtain any permit that is required under this chapter or ch. 30 or 31.

(4) Within 30 days after the department of natural resources has issued all of the permits as required under this chapter and chs. 30 and 31, the board shall proceed to estimate the cost of the work, including the expenses of the proceeding together with the damages that will result from the work, and shall, within a reasonable time, award damages to all lands damaged by the work and assess the cost of the work against the lands in the district in proportion to the assessment of benefits then in force.

(5) The drainage board may grant the petition and order the additional work done only if the drainage board is satisfied that:

Electronic reproduction of 2009−10 Wis. Stats. database, current through 2011 Wis. Act 39 and July 25, 2011.

(a) The intended result can be effectively achieved by additional work at a reasonable cost;

(b) The public welfare will be promoted by such additional work;

(c) The cost of such additional work, when added to all expenses previously incurred by the district will not exceed the total benefits theretofore assessed; and

(d) A petition, which is the same in substance or effect as the current petition, has not previously been denied by the drainage board.

History: 1973 c. 336; 1993 a. 456; 1999 a. 9.

88.73 Providing drainage for lands assessed but not adequately drained. (1) Any person owning lands that have been assessed for costs of construction but which are in need of drainage because of being shut off from access to any district drain or because the slope of the land is such that it is impractical to drain the land into a district drain without crossing the lands of others may file with the drainage board a verified petition stating such facts, including a description of the lands sought to be drained and asking that a drain be laid out from the petitioner's lands to the district drain.

(2) The petitioner and all persons whose lands will be directly affected by the proposed drain may, in writing, waive any or all notices of hearings and may consent to an immediate hearing on the petition, upon which the drainage board may enter an order to construct the drain. The board's order shall include all of the provisions of s. 88.35 (1). If no written waiver or consent is filed by all persons immediately interested, the procedure on a petition under this section shall be substantially as outlined in ss. 88.35 and 88.36.

History: 1991 a. 316; 1993 a. 456.

SUBCHAPTER VII

ENLARGEMENT, CONSOLIDATION, DIVISION AND DISSOLUTION OF DRAINAGE DISTRICT

88.77 Annexation of lands upon petition of owners. (1) If owners of lands adjacent to any drainage district want the lands to be annexed to the district, they may file with the drainage board a petition for annexation. The petition must be signed either by more than one−half of all of the owners of lands in the proposed annex, who shall represent more than one−third of the lands in the proposed annex, or by the owners of more than one−half of the lands in the proposed annex. The petition shall describe the lands sought to be annexed and shall set forth the names of the owners of all of those lands so far as the owners are known. The petition shall be accompanied by a plat showing the original district and the proposed annex.

(2) If the undrained portion of the area proposed to be annexed to the district exceeds 200 acres, the drainage board shall request the report described under s. 88.11 (3) from the department of agriculture, trade and consumer protection on the annexation. Within 60 days after the request, the department shall prepare and return a copy of the report and its approval or disapproval, as provided under s. 88.35 (7).

(3) When the drainage board receives the reports required by s. 88.11, the board shall fix a time and place of a hearing on the petition under sub. (1) and shall cause notice of the hearing to be given under s. 88.05 (2) (b) to the persons specified in s. 88.05 (4) (c).

(4) The drainage board shall issue an order annexing the territory to the drainage district if at the hearing the board finds all of the following facts:

(a) That the petition has sufficient signers.

(b) That the lands described in the petition, together with any additional lands recommended by the board for drainage, will be improved by the proposed annexation.

(c) That the public health or public welfare will be promoted by the annexation.

(d) That the cost of construction will not exceed 75% of the benefits to be derived from the proposed work.

(e) That the proposed work will not materially injure or impair fish or wildlife habitat, scenic beauty, the conservation of natural resources or other public rights or interests.

(5) If the board finds the facts stated in sub. (4) (a) to (c) and (e) but finds that the cost of construction will exceed 75% of the benefits to be derived from the proposed work, the board nevertheless shall annex the territory to the drainage district if, within 10 days of the order being issued under sub. (4), the petitioners file with the board a bond with sufficient sureties to be approved by the board and conditioned for the payment of the excess or the petitioners deposit and leave with the board a sum of money that the board determines will cover the excess.

(6) Upon issuance of the order annexing the territory to the drainage district, the drainage board shall proceed as provided under ss. 88.35 and 88.36.

History: 1993 a. 456; 2007 a. 121.

NOTE: 1993 Wis. Act 456, which substantially affects this section, contains extensive explanatory notes.

88.78 Annexation of benefited lands. (1) Whenever any lands outside a drainage district are in fact receiving the benefits of any drain of such district but such fact was not evident or was inadvertently overlooked at the time of organization of the district, such benefited lands may be annexed under the procedure prescribed in this section.

(2) Any owner of land within the district may file with the board a petition to have the benefited lands annexed to the district and assessed benefits and assessed for costs as other lands in the district. The petition shall describe the benefited lands and how they are benefited. Upon the filing of the petition, the drainage district shall issue an order directing that the owners of the benefited lands be notified of the filing and the contents of the petition and requiring the owners to show cause at a fixed time and place, not less than 20 days after the petition is filed, why their lands should not be brought into the district and assessed.

(3) Any owner of lands sought to be annexed may object to the petition at the hearing thereon. If the drainage board is satisfied that any or all of the lands are receiving benefits from any district drain, the drainage board shall so find in writing and shall issue an order requiring that the benefited lands be made a part of the district.

(4) The board shall assess benefits and assess for costs and award damages to each tract of the annexed lands.

History: 1993 a. 456.

88.79 Consolidation of drainage districts in process of organization. (1) Two or more drainage districts petitioned for or in the process of organization may, upon order of the court, be consolidated to form a single drainage district. The order of consolidation may be issued only after a public hearing as specified in this section.

(2) The consolidation process may be initiated either by the court on its own motion, by recommendation of the board made to the court, or by petition signed by the owners of at least 10% of the lands in each of the districts sought to be consolidated. If such districts are under the jurisdiction of different courts, the proceeding shall be conducted by the court having jurisdiction of the larger area.

(3) The court shall fix a time and place of a hearing on the proposed consolidation and shall cause notice of the hearing to be given under s. 88.05 (1) (b) to the persons specified in s. 88.05 (4) (b). If the court after the hearing is of the opinion that the drainage

Electronic reproduction of 2009−10 Wis. Stats. database, current through 2011 Wis. Act 39 and July 25, 2011.

districts would be benefited by the proposed consolidation, it shall so order, giving a name to the consolidated district.

History: 1993 a. 456.

88.791 Consolidation of existing drainage districts. (1) Two or more existing drainage districts may, upon an order issued by the drainage board, be consolidated to form a single drainage district. An order of consolidation may be issued only after a public hearing as specified in this section.

(2) The consolidation process may be initiated by a petition that is signed by the owners of at least 10% of the lands in each of the districts sought to be consolidated.

(3) The drainage board shall fix a time and place of a hearing on the proposed consolidation and shall cause notice of the hearing to be given under s. 88.05 (2) (b) to the persons specified in s. 88.05 (4) (b). If after the hearing the drainage board is of the opinion that the drainage districts would be benefited by the proposed consolidation, it shall so order, giving a name to the consolidated district.

(4) Upon entry of the order of consolidation, the records of the districts so consolidated shall be the records of the consolidated district.

(5) Assessments made against lands in the several districts so consolidated shall remain in full force and the lien thereof is not affected by such consolidation.

(6) After such consolidation, the benefits of the consolidated district may be reassessed to render them just and equitable as a basis for future assessments for costs, subject to s. 88.02.

History: 1993 a. 456 ss. 100, 101.

NOTE: 1993 Wis. Act 456, which creates this section, contains extensive explanatory notes.

88.80 Withdrawal of lands from drainage district. (1) Any person owning lands within a drainage district may, under an order issued by the drainage board, withdraw the lands from the district if:

(a) All benefits assessed against such lands have been paid; and

(b) The lands to be withdrawn will receive no benefit from the drainage district; and

(c) The drainage district will not be materially injured by the withdrawal of such lands.

(2) The petition for the withdrawal shall be filed with the board. The board shall determine whether all benefits assessed against the land have been paid.

(3) When the petition has been filed, the drainage board shall fix the time and place of a hearing on the petition and shall cause notice of the hearing to be given under s. 88.05 (2) (b) to the persons specified in s. 88.05 (4) (b). If the drainage board finds that the conditions of sub. (1) have been met, it shall issue an order detaching the lands from the district. The drainage board may require the petitioner to pay the expenses connected with the hearing.

History: 1993 a. 456.

88.81 Proceedings to suspend operations of drainage district. (1) (a) The owners of land representing 90% or more of the confirmed benefits in a drainage district, excluding benefits received by land owned by this state, may file with the drainage board a petition requesting that the board conduct no further proceedings and incur on behalf of the district no further expense if the petition is filed within 2 years after the order organizing the district is issued under s. 88.34.

(b) The owners of land representing 67% or more of the confirmed benefits in a drainage district, excluding benefits received by land owned by this state, may file with the drainage board a petition requesting that the board conduct no further proceedings and incur on behalf of the district no further expense if the petition is filed at least 2 years after the order organizing the district is issued under s. 88.34.

(bm) Except as provided in par. (bs), the owner of any land in a drainage district may file with the drainage board a petition requesting that the board conduct no further proceedings and incur on behalf of the district no further expense if the petition is filed at least 20 years after the latest assessment for costs against land in the drainage district.

(bs) A state agency, as defined in s. 16.61 (2) (d), may not petition for the suspension of operations of a drainage district.

(c) Upon receipt of a petition, the drainage board shall fix a time and place of a hearing on the petition and shall cause notice of the hearing to be given under s. 88.05 (2) (b) to the persons specified in s. 88.05 (4) (b).

(2) If after the hearing the drainage board finds that the petition is signed by the required number of owners, that notice of the hearing was properly given, and that the conditions of sub. (3) have been met, it shall issue an order directing that no more work be done in or expense incurred on behalf of the district. The order does not dissolve the district or in any way affect existing contracts. The district remains liable for all its debts existing at the time of issuance of the drainage board order suspending operations, and the board shall continue to levy such additional assessments for costs as are necessary to meet existing obligations.

(3) As a condition of issuing the order under sub. (2), the drainage board shall require the petitioners under this section to pay the expenses of the hearing under this section and all expenses, if any, incurred in connection with specific current projects whose completion would be affected by the drainage board order.

(4) An order suspending operations of a drainage district remains in effect until a like application upon like notice requesting that work be continued is heard and determined in favor of petitioners.

History: 1977 c. 449; 1983 a. 483; 1993 a. 456.

88.82 Dissolution of drainage districts. (1) (a) The owners of land representing 90% or more of the confirmed benefits in a drainage district, excluding benefits received by land owned by this state, may file with a court having jurisdiction on this matter a petition for the dissolution of the district if the petition is signed by those owners and if the petition is filed within 2 years after the order organizing the district is issued under s. 88.34.

(b) The owners of land representing 67% or more of the confirmed benefits in a drainage district, excluding benefits received by land owned by this state, may file with a court having jurisdiction on this matter a petition for the dissolution of the district if the petition is signed by those owners and if the petition is filed at least 2 years after the order organizing the district is issued under s. 88.34.

(bm) Except as provided in par. (bs), the owner of any land in a drainage district may file with the court a petition for the dissolution of the district if the petition is filed at least 20 years after the latest assessment for costs against land in the drainage district.

(bs) A state agency, as defined in s. 16.61 (2) (d), may not petition for the dissolution of a drainage district.

(c) In any county in which all land has been incorporated in cities or villages, the county board of supervisors is authorized to file the petition.

(d) Upon the filing of a petition for dissolution under this section, the court shall fix the time and place of a hearing on the petition and shall cause notice of the hearing to be given under s. 88.05 (1) (b) to the persons specified under s. 88.05 (4) (b).

(2) No district shall be dissolved until all its debts have been paid unless:

(a) Funds to pay such debts, including any interest thereon, have been deposited with the county treasurer; or

(b) The lands of the district have been assessed to the full amount of the confirmed assessed benefits and such assessments either have been paid in full or tax certificates have been issued for the lands under s. 74.57.

2009−10 Wis. Stats. database updated and current through 2011 Wis. Act 39 and July 25, 2011. Statutory changes effective on or prior to 9−1−11 are printed as if currently in effect. Statutory changes effective after 9−1−11 are designated by NOTES. See Are The Statutes on this Website Official?

Electronic reproduction of 2009−10 Wis. Stats. database, current through 2011 Wis. Act 39 and July 25, 2011.

(3) If the court is satisfied upon the hearing that the conditions stated in sub. (2) have been met, that the petition is signed by the required number of owners, and that the public welfare will be promoted by dissolution of the district, it shall enter an order dissolving the drainage district. If the court enters an order dissolving the drainage district, it shall order dissolution of the entire drainage district and may not order dissolution of part of the district.

(4) If the county treasurer has on hand any funds belonging to such dissolved district, the treasurer shall forthwith make distribution thereof among the several landowners in the district in proportion to the last confirmed assessment of benefits in the district. If there is any doubt as to the ownership of such lands, the owners claiming the right to participate in such funds shall make satisfactory proof of ownership to the court.

(5) If the county treasurer has funds on hand belonging to a drainage district which has been inactive for 6 or more years, he or she shall publish in the county, as a class 3 notice, under ch. 985, a notice of intent to file with the court having jurisdiction thereof a petition for dissolution of the drainage district, except that such notice is not required if funds on hand are less than $100. Ninety days after the last publication provided for in this subsection, the county treasurer shall file such petition together with objections, if any, and if dissolution is ordered, such funds held by the county treasurer shall revert and pass to the county for the benefit of the county. If the funds on hand are less than $100, such funds shall automatically revert and pass to the county general fund.

(6) Any drains which have been constructed by a drainage district dissolved under this section or under prior law shall remain common waterways for the use of all landowners in the dissolved district. Any such landowner may make repairs thereto at the landowner's own expense. Any person who in any manner obstructs or injures any such drain is liable for all damages caused to any person thereby and in addition may be fined not more than $100.

(7) In the alternative in any county in which all land has been incorporated in cities or villages if a drainage board is abolished or if a drainage district passes out of existence, any funds being held by the county treasurer shall revert and pass to the county for the benefit of the county.

History: 1975 c. 324, 421; 1983 a. 483; 1987 a. 378; 1991 a. 32, 316; 1993 a. 456.

Cross−reference: See also ch. NR 301, Wis. adm. code.

Although the "public welfare" concept escapes precise definition, and necessarily involves consideration of numerous factors, it does not, in the context of ch. 88, permit reference to any benefit imaginable. With no formal charge or authority, the claimed willingness of other entities to assume drainage duties has little bearing on whether elimination of the district will promote the public welfare. A district's popularity is not an appropriate measure of whether dissolution promotes the public welfare. A circuit court's desire to end discord cannot supply the basis for its public welfare finding. Town of Stiles v. Stiles/Lena Drainage District, 2010 WI App 87, 327 Wis. 2d 491, 787 N.W.2d 876, 09−0556.

88.83 Transfer of district to city or village jurisdiction. **(1)** The owners of a majority of the land in any drainage district located entirely within the corporate limits of a city or village may petition the drainage board having jurisdiction of the district to transfer jurisdiction thereof to the city or village.

(1m) The owners of a majority of the land lying within the corporate limits of a city or village in any drainage district located partially within the corporate limits of a city or village may petition the drainage board having jurisdiction of the district to transfer jurisdiction of that part of the district located within the city or village to the city or village if the district and the city or village are in agreement regarding the terms of transfer.

(1r) The owners of a majority of the land lying within the limits of a town in any drainage district located partially within the limits of the town may petition the drainage board having jurisdiction of the district to transfer jurisdiction of that part of the district located within the town to the town if the district and the town are in agreement regarding the terms of transfer. The provisions of subs. (3), (4) and (5) governing the transfer of a section of a drainage district to a city or village are applicable to a transfer under this subsection.

(2) Upon receiving a petition under this section the drainage board shall fix the time and place of the hearing on the petition and shall cause notice of the hearing to be given under s. 88.05 (2) (b) to the persons specified in s. 88.05 (4) (b).

(3) If the drainage board finds upon the hearing that the petition is signed by the owners of a majority of the land in the district, or by a majority of the owners in that part of the district lying within the corporate limits of a city or village, it shall issue an order transferring jurisdiction of the district or part of the district to the city or village. If the order transfers jurisdiction of the entire district, the drainage district shall cease to exist as a district under this chapter and shall automatically come under the jurisdiction of the governing body of the city or village in which the district is located. If the order transfers jurisdiction of only a part of the district, the section transferred shall automatically come under the jurisdiction of the governing body of the city or village in which the district is located. After a transfer, all proceedings with reference to the drainage district or part of the district shall be under the city or village drainage law.

(4) As an alternative, proceedings covered by this section may be initiated by a resolution of the governing body of a city or village. The resolution shall state that the city or village is willing to accept the drain or part of the drain and to administer it under the laws pertaining to the operation of drains by the city or village, and that the public interest requires that the city or village take over the operation of the drain or part of the drain. The resolution shall be published as a class 1 notice under ch. 985. The city or village may petition the drainage board having jurisdiction of the drain to issue an order transferring jurisdiction of the district or part of the district to the city or village. No hearing may be held on the petition until 30 days have elapsed from the date of publication of the notice. A copy of the petition, together with a copy of the resolution, shall be served on the county clerk of the county in which the drain is located, and also upon the board having jurisdiction of the drain. After the hearing the drainage board may issue an order transferring jurisdiction of the drain or part of the drain to the city or village. If an order is issued that transfers jurisdiction of the entire district, the drainage district shall cease to exist as a district under this chapter and shall automatically come under the jurisdiction of the governing body of the city or village in which the district is located. If the order transfers jurisdiction of only a part of the district, the section transferred shall automatically come under the jurisdiction of the governing body of the city or village in which the district is located. After a transfer, all proceedings with reference to the drainage district or part of the district shall be under the city or village drainage law.

(5) Upon entry of the order transferring jurisdiction of such district to such city or village, the county treasurer shall pay to the city or village treasurer of such city or village all moneys in the county treasurer's hands which belong to such drainage district. Upon entry of an order transferring jurisdiction of a part of a district to the city or village in which it is located, the county treasurer shall pay to the city or village treasurer a proportional share of the moneys in the county treasurer's hands which belong to the drainage district based upon assessed benefits transferred less a proportional share of outstanding indebtedness.

History: 1979 c. 110 s. 60 (11); 1991 a. 316; 1993 a. 456.

SUBCHAPTER VIII

RIGHTS OF DRAINAGE; PRIVATE DRAINS; MISCELLANEOUS PROVISIONS

88.87 Road grades not to obstruct natural drainage, landowners not to obstruct highway drainage; remedies. **(1)** It is recognized that the construction of highways and

Electronic reproduction of 2009−10 Wis. Stats. database, current through 2011 Wis. Act 39 and July 25, 2011.

railroad grades must inevitably result in some interruption of and changes in the preexisting natural flow of surface waters and that changes in the direction or volume of flow of surface waters are frequently caused by the erection of buildings, dikes and other facilities on privately owned lands adjacent to highways and railroad grades. The legislature finds that it is necessary to control and regulate the construction and drainage of all highways and railroad grades so as to protect property owners from damage to lands caused by unreasonable diversion or retention of surface waters due to a highway or railroad grade construction and to impose correlative duties upon owners and users of land for the purpose of protecting highways and railroad grades from flooding or water damage.

(2) (a) Whenever any county, town, city, village, railroad company or the department of transportation has heretofore constructed and now maintains or hereafter constructs and maintains any highway or railroad grade in or across any marsh, lowland, natural depression, natural watercourse, natural or man−made channel or drainage course, it shall not impede the general flow of surface water or stream water in any unreasonable manner so as to cause either an unnecessary accumulation of waters flooding or water−soaking uplands or an unreasonable accumulation and discharge of surface waters flooding or water−soaking lowlands. All such highways and railroad grades shall be constructed with adequate ditches, culverts, and other facilities as may be feasible, consonant with sound engineering practices, to the end of maintaining as far as practicable the original flow lines of drainage. This paragraph does not apply to highways or railroad grades used to hold and retain water for cranberry or conservation management purposes.

(b) Drainage rights and easements may be purchased or condemned by the public authority or railroad company having control of the highway or railroad grade to aid in the prevention of damage to property owners which might otherwise occur as a result of failure to comply with par. (a).

(c) If a city, village, town, county or railroad company or the department of transportation constructs and maintains a highway or railroad grade not in accordance with par. (a), any property owner damaged by the highway or railroad grade may, within 3 years after the alleged damage occurred, file a claim with the appropriate governmental agency or railroad company. The claim shall consist of a sworn statement of the alleged faulty construction and a description, sufficient to determine the location of the lands, of the lands alleged to have been damaged by flooding or water−soaking. Within 90 days after the filing of the claim, the governmental agency or railroad company shall either correct the cause of the water damage, acquire rights to use the land for drainage or overflow purposes, or deny the claim. If the agency or company denies the claim or fails to take any action within 90 days after the filing of the claim, the property owner may bring an action in inverse condemnation under ch. 32 or sue for such other relief, other than damages, as may be just and equitable.

(d) Failure to give the requisite notice by filing a claim under par. (c) does not bar action on the claim if the city, village, town, county, railroad company or department of transportation had actual notice of the claim within 3 years after the alleged damage occurred and the claimant shows to the satisfaction of the court that the delay or failure to give the requisite notice has not been prejudicial to the defendant city, village, town, county, railroad company or department of transportation.

(3) (a) It is the duty of every owner or user of land who constructs any building, structure or dike or otherwise obstructs the flow of stream water through any watercourse or natural or man−made channel or obstructs the flow of surface water through any natural or man−made channel, natural depression or natural draw through which surface waters naturally flow:

1. To provide and at all times maintain a sufficient drainage system to protect a downstream highway or railroad grade from water damage or flooding caused by such obstruction, by directing the flow of surface waters into existing highway or railroad drainage systems; and

2. To protect an upstream highway or railroad grade from water damage or flooding caused by such obstruction, by permitting the flow of such water away from the highway or railroad grade substantially as freely as if the obstruction had not been created.

(b) Whoever fails or neglects to comply with a duty imposed by par. (a) is liable for all damages to the highway or railroad grade caused by such failure or neglect. The authority in charge of maintenance of the highway or the railroad company which constructed or maintains the railroad grade may bring an action to recover such damages. An action under this paragraph shall be commenced within the time provided by s. 893.59 or be barred.

(c) The authorities in charge of maintenance of highways or railroad companies maintaining railroad grades and their agents and employees may enter any lands for the purpose of removing an obstruction in a watercourse or highway drainage ditch which is in violation of par. (a) and which is flooding or causing damage to a highway under its jurisdiction.

(4) If a railway company fails to comply with sub. (2), any person aggrieved thereby may file a complaint with the office of the commissioner of railroads setting forth the facts. The office shall investigate and determine the matter in controversy in accordance with ch. 195, and any order it makes in such proceeding has the same effect as an order in any other proceeding properly brought under ch. 195.

History: 1977 c. 29 s. 1654 (8) (c), (9) (f); 1979 c. 323; 1981 c. 347; 1993 a. 16, 123, 456.

Sub. (2) (c) requirements are mandatory conditions precedent to bringing an action under this section. Van v. Town of Manitowoc Rapids, 150 Wis. 2d 929, 442 N.W.2d 557 (Ct. App. 1989).

This statute preempts common law claims; the claims period under sub. (2) (c) begins to run when the damage is first discovered and is not extended if damage continues. Pruim v. Town of Ashford, 168 Wis. 2d 114, 483 N.W.2d 242 (Ct. App. 1992).

Despite a finding that a railroad was not responsible for increased water flow that resulted in flooding, an order to the railroad to install a drainage pipe was proper. Soo Line Railroad v. Commissioner of Transportation, 170 Wis. 2d 543, 489 N.W.2d 672 (Ct. App. 1992).

Sub. (2) (a) imposes a duty on railroads to refrain from impeding water flow. The railroad commissioner may act prospectively under sub. (4) to prevent flooding. Sub. (2) (c) applies when there has been actual damage, but does not require actual damage for the commissioner to act under sub. (4). Chicago & North Western Transportation Co v. Commissioner of Railroads, 204 Wis. 2d 1, 553 N.W.2d 845 (Ct. App. 1996), 95−2509.

This section does not impose on a circuit court a positive duty to grant injunctive relief under specified conditions, but provides an alternative remedy to an action for damages under ch. 32. The common law preference for legal over equitable relief applies. As such, to obtain an injunction it must be shown that the injunction is necessary to prevent future harm to the property and there is no adequate legal remedy. Kohlbeck v. Reliance Construction Company, Inc. 2002 WI App 142, 256 Wis. 2d 235, 647 N.W.2d 277, 01−1404.

Parties who can state a claim against DOT under both ss. 32.10 and 88.87 may choose to file suit in either Dane County or the county in which the property lies. Kohlbeck v. Reliance Construction Company, Inc. 2002 WI App 142, 256 Wis. 2d 235, 647 N.W.2d 277, 01−1404.

88.88 Railroad to construct ditch or sluiceway across right−of−way. (1) Whenever the owner of land desires to drain the same by a blind or open ditch and, to properly drain such land, a connecting ditch or sluiceway should be constructed across the right−of−way of a railway company, such owner shall file with the depot agent of such company nearest to such land a written petition stating the kind of ditch proposed to be built and requesting the company to construct a ditch or sluiceway across its right−of−way which will conform thereto. Within 60 days after the filing of such petition, the railway company shall construct such ditch or sluiceway. The petitioner shall pay the cost of such construction and shall assume all expenses in connection with maintaining such ditch or sluiceway on the railroad's right−of−way.

(2) If the railway company fails to comply with sub. (1), the person aggrieved thereby may file a complaint with the office of the commissioner of railroads setting forth the facts. The office shall investigate and determine the matter in controversy in accordance with ch. 195, and any order it makes in such proceed-

Electronic reproduction of 2009−10 Wis. Stats. database, current through 2011 Wis. Act 39 and July 25, 2011.

ing has the same effect as an order in any other proceeding properly brought under ch. 195.

History: 1977 c. 29 s. 1654 (9) (f); 1981 c. 347; 1993 a. 16, 123, 490.

88.89 Roads not to obstruct natural watercourse. **(1)** Whenever any embankment, grade, culvert or bridge, including the approaches to the culvert or bridge, built or maintained by any person across a natural watercourse or natural draw obstructs the watercourse or draw so that waters therein are set back or diverted upon any lands in a drainage district, the person who built the embankment, grade, culvert or bridge shall enlarge the waterway through the embankment, grade, culvert or bridge and the approaches thereto so that it will not set back or divert waters upon lands in the district.

(2) The drainage board or the owner of any land upon which water is set back or diverted by the obstruction described in sub. (1) may serve notice upon the owner or maintainer of the embankment, grade, culvert or bridge to enlarge the opening for the waterway or to make new openings in order to permit the water to pass without being set back or diverted onto the lands of the district. If the owner of or person maintaining the embankment, grade, culvert or bridge fails to comply with the directive of the notice within 60 days after receiving the notice, the drainage board on its own behalf, or on petition of the injured landowner, may conduct a hearing under sub. (3).

(3) Upon receipt of a petition under sub. (2), the drainage board shall fix the time and place of a hearing on the petition and shall issue an order to the owner or maintainer of the embankment, grade, culvert or bridge to show cause why an order directing the work to be done should not be issued. At least 10 days before the time fixed for the hearing on the petition, the order to show cause shall be served on the owner or maintainer, or on both if both are named in the petition, as prescribed in s. 801.11 for the service of a summons.

(4) If the drainage board is satisfied that the embankment, grade, bridge or culvert so obstructs the watercourse or draw that it causes water to be set back or diverted upon lands in the drainage district, the drainage board shall issue an order to the owner or maintainer of the embankment, grade, bridge or culvert to enlarge the waterway or construct a new waterway through the embankment, grade, bridge or culvert, as the facts warrant. The period of time that the embankment, grade, bridge or culvert has been in existence is no defense to a proceeding under this section.

(5) Any person who fails to comply with an order issued under this section is liable to the injured party for all damages caused by the failure.

History: Sup. Ct. Order, 67 Wis. 2d 585, 774 (1975); 1977 c. 449; 1993 a. 456; 1995 a. 225.

88.90 Removal of obstructions from natural watercourses. **(1)** Whenever any natural watercourse becomes obstructed so that the natural flow of water along the same is retarded by the negligent action of the owner, occupant or person in charge of the land on which the obstruction is located, the owner or occupant of any lands damaged by such obstruction may request the removal thereof by giving notice in writing to such owner, occupant or person in charge of the land on which the obstruction is located.

(2) If the obstruction is not removed within 6 days after receipt of such notice and if the obstruction is located in a village or town, the owner or occupant of the damaged lands may make complaint to the village or town board, filing at the same time a copy of the notice. The village trustees or town supervisors, after viewing the watercourse and upon being satisfied that the complaint is just, shall make recommendations in writing to the owner or occupant of the lands where the obstruction is located, for the removal of such obstruction. If such recommendations are not followed within a reasonable time, the village or town board shall order the obstruction removed. The cost of view and of removal shall be charged and assessed against the lands from which the obstruction was removed and shall be collected as other special assessments are collected.

(3) Whenever any natural watercourse becomes obstructed through natural causes, the owner or occupant of any lands damaged by the effect which the obstruction has upon the flow of the water may go upon the land where the obstruction is located and remove it at that person's own expense. Such person is not guilty of trespass for entry upon the land but is liable for damage caused to crops or structures. The rights and privileges conferred by this subsection also extend to the agents or employees of the person causing the obstruction to be removed.

(4) This section does not in any manner limit the scope of s. 88.87.

History: 1991 a. 316; 1995 a. 315.

Before proceeding under sub. (3), a permit to remove materials from the bed of a navigable waterway under s. 30.20 is required. State v. Dwyer, 91 Wis. 2d 440, 283 N.W.2d 448 (Ct. App. 1979).

If a municipality charges and assesses costs authorized under this section, it may collect them in the same manner it collects special assessments under s. 66.0703. However, if the municipality charges and assesses those costs under the authority granted under this section, it need not comply with the requirements for special assessments contained in s. 66.0703. Neither the cost of viewing and removal under sub. (2) and the cost of service to the property under s. 66.0703 includes the cost of legal services incurred by the municipality in defending against challenges to the removal of materials from a ditch. Robinson v. Town of Bristol, 2003 WI App 97, 264 Wis. 2d 318, 667 N.W.2d 14, 02−1247.

88.91 Penalty for placing obstruction in ditches. **(1)** Except as authorized by s. 88.93, no person shall place any kind of obstruction to the free flow of water, including any soil willfully deposited, in any drainage ditch, constructed under any drainage law of this state or lawfully constructed by any other person, without first obtaining the written consent of the drainage board or other person or authority in charge of such ditch.

(2) Any person violating this section may be fined not more than $100 and in addition is liable to the drainage district and to all persons whose ditches or lands are injured by such obstruction for all damages caused by the obstruction.

History: 1975 c. 108.

Cross−reference: See also ch. NR 301, Wis. adm. code.

88.92 Private drains not to be connected with district drains. **(1)** Except as provided in s. 88.93 no person may connect any drain with a district drain, extend any drain that connects with a district drain or remove any spoil bank except under written plans and specifications approved by the drainage board and under any conditions imposed by the drainage board. The drainage board may issue an order directing the removal or modification of a drain connected or extended in violation of this section or issue an order directing the restoration of any spoil bank removed in violation of this section, including violations that occurred before May 13, 1994.

(2) (a) In this subsection, "damages" includes the payments that the drainage district would have received during the time that the illegal connection or extension existed if the territory drained by the illegal connection or extension had been annexed to the district and an assessment for connection of the drain under s. 88.405 had been levied.

(b) Any person who violates sub. (1) is liable to the district for all damages caused by the violation.

(3) The board shall preserve a copy of any plans and specifications approved under sub. (1).

History: 1993 a. 456.

88.93 Right to take water from drainage ditch. Any owner of lands which are located in or which adjoin a drainage district and which border on a drainage ditch may take water from such ditch for use in flooding lands for cranberry culture or for irrigation, if such water is taken from the ditch in such a manner as not to injure the ditch and the taking thereof does not materially defeat the purposes of such drainage and, in case the water is to be used for irrigation, the permit required under s. 30.18 (2) (a) 2. has been obtained.

History: 1985 a. 60.

2009−10 Wis. Stats. database updated and current through 2011 Wis. Act 39 and July 25, 2011. Statutory changes effective on or prior to 9−1−11 are printed as if currently in effect. Statutory changes effective after 9−1−11 are designated by NOTES. See Are The Statutes on this Website Official?

Electronic reproduction of 2009−10 Wis. Stats. database, current through 2011 Wis. Act 39 and July 25, 2011.

88.94 Drains for individual landowners. (1) Whenever any owner of agricultural lands desires to install drainage upon not more than 80 acres of such land, the owner may present a petition to the drainage board or, if there is no drainage board in the county, to the town supervisors of the town in which such land is located. Such petition shall set forth that:

(a) The petitioner desires to install drainage upon agricultural lands owned by the petitioner;

(b) Because of the contour of the land there is no suitable outlet on lands owned by the petitioner;

(c) The proposed drain will promote the general welfare and health of the community;

(d) It is impractical for the petitioner to drain the land without crossing the lands of others; and

(e) It is desired that a drain be laid out to a suitable natural outlet, specifying the course of the drain and location of the proposed outlet and ownership of lands through which such proposed drain would be laid.

(2) After receiving the petition the drainage board or supervisors of the town shall promptly fix the time and place of a hearing on the petition and shall give notice of the hearing under s. 88.05 (2) (b) to the owners and occupants of all lands through or along which the drain may pass and to the persons specified in s. 88.05 (4) (a).

(3) At the time and place fixed for hearing, the drainage board or town supervisors shall meet and hear all interested persons wishing to appear for or against the petition. If the board or supervisors decide that the facts set out in the application are true, that a drain is necessary and that the benefits will exceed the cost of construction, they shall by order lay out a drain through which applicant's lands may be drained as a public drain. Otherwise, they shall deny the application. An order laying out a drain shall specify the benefits and damages to lands of others through which such drain will be laid out and shall provide that the drain may not be constructed until the excess of damages over benefits, if any, has been paid to the landowners entitled thereto. The order also shall contain a description of the location of the drain and specifications therefor. Lands of others shall not be assessed for costs even though benefited by the drain.

(4) Within 10 days after the making of an order laying out a drain, the board or supervisors shall cause a copy of the order to be sent by registered mail to each owner through whose lands the drain will pass, but failure to mail the copy within 10 days does not render the order void. Such order is final unless appealed from to the circuit court within 30 days after the mailing of the copy thereof as provided in this subsection.

(5) Within 30 days after the time for appeal from the order has expired or after the order is confirmed on appeal, the board or supervisors shall cause a copy of the order to be recorded with the register of deeds of the county in which the lands are located. Thereupon, the drain becomes a public drain and the applicant may proceed with construction after having paid any excess of damages over benefits as specified in the order.

(6) This section does not authorize entry upon lands of another without the consent of the owner thereof during any time when there is any growing crop on such land, and no order issued under this section is effective to authorize such entry.

(7) This section does not apply to the installation or construction of a drain across the right−of−way of any railroad company, proceedings for which shall be as provided in s. 88.88.

(8) Expenses incurred by the drainage board under this section shall be paid by the petitioner.

History: 1991 a. 316; 1993 a. 301, 456, 490.

2009−10 Wis. Stats. database updated and current through 2011 Wis. Act 39 and July 25, 2011. Statutory changes effective on or prior to 9−1−11 are printed as if currently in effect. Statutory changes effective after 9−1−11 are designated by NOTES. See Are The Statutes on this Website Official?

Appendix F

Other Commonly Used Statutes and Rules

Electronic reproduction of 2009−10 Wis. Stats. database, current through 2011 Wis. Act 39 and July 25, 2011.

CHAPTER 19

GENERAL DUTIES OF PUBLIC OFFICIALS

SUBCHAPTER I
OFFICIAL OATHS AND BONDS
19.01 Oaths and bonds.
19.015 Actions by the state, municipality or district.
19.02 Actions by individuals.
19.03 Security for costs; notice of action.
19.04 Other actions on same bond.
19.05 Execution; lien of judgment.
19.06 Sureties, how relieved.
19.07 Bonds of public officers and employees.
19.10 Oaths.
19.11 Official bonds.
19.12 Bond premiums payable from public funds.
SUBCHAPTER II
PUBLIC RECORDS AND PROPERTY
19.21 Custody and delivery of official property and records.
19.22 Proceedings to compel the delivery of official property.
19.23 Transfer of records or materials to historical society.
19.24 Refusal to deliver money, etc., to successor.
19.25 State officers may require searches, etc., without fees.
19.31 Declaration of policy.
19.32 Definitions.
19.33 Legal custodians.
19.34 Procedural information.
19.345 Time computation.
19.35 Access to records; fees.
19.356 Notice to record subject; right of action.
19.36 Limitations upon access and withholding.
19.365 Rights of data subject to challenge; authority corrections.
19.37 Enforcement and penalties.
19.39 Interpretation by attorney general.
SUBCHAPTER III
CODE OF ETHICS FOR PUBLIC
OFFICIALS AND EMPLOYEES
19.41 Declaration of policy.
19.42 Definitions.
19.43 Financial disclosure.
19.44 Form of statement.
19.45 Standards of conduct; state public officials.
19.451 Discounts at certain stadiums.
19.46 Conflict of interest prohibited; exception.
19.47 Statements of economic interests.
19.48 Duties of the board.
19.55 Public inspection of records.
19.56 Honorariums, fees and expenses.
19.57 Conferences, visits and economic development activities.
19.575 Tourism activities.
19.579 Civil penalties.
19.58 Criminal penalties.
19.59 Codes of ethics for local government officials, employees and candidates.
SUBCHAPTER IV
PERSONAL INFORMATION PRACTICES
19.62 Definitions.
19.65 Rules of conduct; employee training; and security.
19.67 Data collection.
19.68 Collection of personally identifiable information from Internet users.
19.69 Computer matching.
19.71 Sale of names or addresses.
19.77 Summary of case law and attorney general opinions.
19.80 Penalties.
SUBCHAPTER V
OPEN MEETINGS OF GOVERNMENTAL BODIES
19.81 Declaration of policy.
19.82 Definitions.
19.83 Meetings of governmental bodies.
19.84 Public notice.
19.85 Exemptions.
19.851 Closed sessions by government accountability board.
19.86 Notice of collective bargaining negotiations.
19.87 Legislative meetings.
19.88 Ballots, votes and records.
19.89 Exclusion of members.
19.90 Use of equipment in open session.
19.96 Penalty.
19.97 Enforcement.
19.98 Interpretation by attorney general.

SUBCHAPTER I

OFFICIAL OATHS AND BONDS

19.01 Oaths and bonds. (1) FORM OF OATH. Every official oath required by article IV, section 28, of the constitution or by any statute shall be in writing, subscribed and sworn to and except as provided otherwise by s. 757.02 and SCR 40.15, shall be in substantially the following form:

STATE OF WISCONSIN,

County of ....

I, the undersigned, who have been elected (or appointed) to the office of ...., but have not yet entered upon the duties thereof, swear (or affirm) that I will support the constitution of the United States and the constitution of the state of Wisconsin, and will faithfully discharge the duties of said office to the best of my ability. So help me God.

....,

Subscribed and sworn to before me this .... day of ...., ... (year)

....(Signature)....,

(1m) FORM OF ORAL OATH. If it is desired to administer the official oath orally in addition to the written oath prescribed above, it shall be in substantially the following form:

I, ..., swear (or affirm) that I will support the constitution of the United States and the constitution of the state of Wisconsin, and will faithfully and impartially discharge the duties of the office of .... to the best of my ability. So help me God.

(2) FORM OF BOND. (a) Every official bond required of any public officer shall be in substantially the following form:

We, the undersigned, jointly and severally, undertake and agree that ...., who has been elected (or appointed) to the office of ...., will faithfully discharge the duties of the office according to law, and will pay to the parties entitled to receive the same, such damages, not exceeding in the aggregate .... dollars, as may be suffered by them in consequence of the failure of .... to discharge the duties of the office.

Dated ...., ... (year)

....(Principal)....,

....(Surety)....,

(b) Any further or additional official bond lawfully required of any public officer shall be in the same form and it shall not affect or impair any official bond previously given by the officer for the same or any other official term. Where such bond is in excess of the sum of $25,000, the officer may give 2 or more bonds.

(2m) EFFECT OF GIVING BOND. Any bond purportedly given as an official bond by a public officer, of whom an official bond is required, shall be deemed to be an official bond and shall be deemed as to both principal and surety to contain all the conditions and provisions required in sub. (2), regardless of its form or wording, and any provisions restricting liability to less than that provided in sub. (2) shall be void.

(3) OFFICIAL DUTIES DEFINED. The official duties referred to in subs. (1) and (2) include performance to the best of his or her ability by the officer taking the oath or giving the bond of every official act required, and the nonperformance of every act forbidden,

Electronic reproduction of 2009−10 Wis. Stats. database, current through 2011 Wis. Act 39 and July 25, 2011.

by law to be performed by the officer; also, similar performance and nonperformance of every act required of or forbidden to the officer in any other office which he or she may lawfully hold or exercise by virtue of incumbency of the office named in the official oath or bond. The duties mentioned in any such oath or bond include the faithful performance by all persons appointed or employed by the officer either in his or her principal or subsidiary office, of their respective duties and trusts therein.

(4) WHERE FILED. (a) Official oaths and bonds of the following public officials shall be filed in the office of the secretary of state:

1. All members and officers of the legislature.
2. The governor.
3. The lieutenant governor.
4. The state superintendent.
5. The justices, reporter and clerk of the supreme court.
6. The judges of the court of appeals.
7. The judges and reporters of the circuit courts.
8. All notaries public.
9. Every officer, except the secretary of state, state treasurer, district attorney and attorney general, whose compensation is paid in whole or in part out of the state treasury, including every member or appointee of a board or commission whose compensation is so paid.
10. Every deputy or assistant of an officer who files with the secretary of state.

(b) Official oaths and bonds of the following public officials shall be filed in the office of the governor:

1. The secretary of state.
2. The state treasurer.
3. The attorney general.

(bn) Official oaths and bonds of all district attorneys shall be filed with the secretary of administration.

(c) Official oaths and bonds of the following public officials shall be filed in the office of the clerk of the circuit court for any county in which the official serves:

1. All circuit and supplemental court commissioners.
3. All municipal judges.
4. All judges or judicial officers, not included in subds. 1. and 3., elected or appointed for that county, or whose jurisdiction is limited to that county.

(d) Official oaths and bonds of all elected or appointed county officers, other than those enumerated in par. (c), and of all officers whose compensation is paid out of the county treasury shall be filed in the office of the county clerk of any county in which the officer serves.

(dm) Official oaths and bonds of members of the governing board, and the superintendent and other officers of any joint county school, county hospital, county sanatorium, county asylum or other joint county institution shall be filed in the office of the county clerk of the county in which the buildings of the institution that the official serves are located.

(e) Official oaths and bonds of all elected or appointed town officers shall be filed in the office of the town clerk for the town in which the officer serves, except that oaths and bonds of town clerks shall be filed in the office of the town treasurer.

(f) Official oaths and bonds of all elected or appointed city officers shall be filed in the office of the city clerk for the city in which the officer serves, except that oaths and bonds of city clerks shall be filed in the office of the city treasurer.

(g) Official oaths and bonds of all elected or appointed village officers shall be filed in the office of the village clerk for the village in which the officer serves, except that oaths and bonds of village clerks shall be filed in the office of the village treasurer.

(h) The official oath and bond of any officer of a school district or of an incorporated school board shall be filed with the clerk of the school district or the clerk of the incorporated school board for or on which the official serves.

(j) Official oaths and bonds of the members of a technical college district shall be filed with the secretary for the technical college district for which the member serves.

(4m) APPROVAL AND NOTICE. Bonds specified in sub. (4) (c), (d) and (dm) and bonds of any county employee required by statute or county ordinance to be bonded shall be approved by the district attorney as to amount, form and execution before the bonds are accepted for filing. The clerk of the circuit court and the county clerk respectively shall notify in writing the county board or chairperson within 5 days after the entry upon the term of office of a judicial or county officer specified in sub. (4) (c), (d) and (dm) or after a county employee required to be bonded has begun employment. The notice shall state whether or not the required bond has been furnished and shall be published with the proceedings of the county board.

(5) TIME OF FILING. Every public officer required to file an official oath or an official bond shall file the same before entering upon the duties of the office; and when both are required, both shall be filed at the same time.

(6) CONTINUANCE OF OBLIGATION. Every such bond continues in force and is applicable to official conduct during the incumbency of the officer filing the same and until the officer's successor is duly qualified and installed.

(7) INTERPRETATION. This section shall not be construed as requiring any particular officer to furnish or file either an official oath or an official bond. It is applicable to such officers only as are elsewhere in these statutes or by the constitution or by special, private or local law required to furnish such an oath or bond. Provided, however, that whether otherwise required by law or not, an oath of office shall be filed by every member of any board or commission appointed by the governor, and by every administrative officer so appointed, also by every secretary and other chief executive officer appointed by such board or commission.

(8) PREMIUM ON BOND ALLOWED AS EXPENSE. The state and any county, town, village, city or school district may pay the cost of any official bond furnished by an officer or employee thereof pursuant to law or any rules or regulations requiring the same if said officer or employee shall furnish a bond with a licensed surety company as surety, said cost not to exceed the current rate of premium per year. The cost of any such bond to the state shall be charged to the proper expense appropriation.

History: 1971 c. 154; 1977 c. 29 s. 1649; 1977 c. 187 ss. 26, 135; 1977 c. 305 s. 64; 1977 c. 449; Sup. Ct. Order, eff. 1−1−80; 1979 c. 110 s. 60 (13); 1983 a. 6, 192; 1983 a. 538 s. 271; 1989 a. 31; 1991 a. 39, 316; 1993 a. 399; 1997 a. 250; 1999 a. 32, 83; 2001 a. 61; 2007 a. 96.

19.015 Actions by the state, municipality or district. Whenever the state or any county, town, city, village, school district or technical college district is entitled to recover any damages, money, penalty or forfeiture on any official bond, the attorney general, county chairperson, town chairperson, mayor, village president, school board president or technical college district board chairperson, respectively, shall prosecute or cause to be prosecuted all necessary actions in the name of the state, or the municipality, against the officer giving the bond and the sureties for the recovery of the damages, money, penalty or forfeiture.

History: 1971 c. 154; 1983 a. 192; 1989 a. 56; 1993 a. 399.

19.02 Actions by individuals. Any person injured by the act, neglect or default of any officer, except the state officers, the officer's deputies or other persons which constitutes a breach of the condition of the official bond of the officer, may maintain an action in that person's name against the officer and the officer's sureties upon such bond for the recovery of any damages the person may have sustained by reason thereof, without leave and without any assignment of any such bond.

History: 1991 a. 316.

19.03 Security for costs; notice of action. (1) Every person commencing an action against any officer and sureties upon

Electronic reproduction of 2009−10 Wis. Stats. database, current through 2011 Wis. Act 39 and July 25, 2011.

an official bond, except the obligee named therein, shall give security for costs by an undertaking as prescribed in s. 814.28 (3), and a copy thereof shall be served upon the defendants at the time of the service of the summons. In all such actions if final judgment is rendered against the plaintiff the same may be entered against the plaintiff and the sureties to such undertaking for all the lawful costs and disbursements of the defendants in such action, by whatever court awarded.

(2) The plaintiff in any such action shall, within 10 days after the service of the summons therein, deliver a notice of the commencement of such action to the officer who has the legal custody of such official bond, who shall file the same in his or her office in connection with such bond.

History: Sup. Ct. Order, 67 Wis. 2d 585, 773 (1975); 1975 c. 218; 1991 a. 316.

19.04 Other actions on same bond. No action brought upon an official bond shall be barred or dismissed by reason merely that any former action shall have been prosecuted on such bond, but any payment of damages made or collected from the sureties or any of them on any judgment in an action previously begun by any party on such bond shall be applied as a total or partial discharge of the penal sum of such bond, and such defense or partial defense may be pleaded by answer or supplemental answer as may be proper. The verdict and judgment in every such action shall be for no more than the actual damages sustained or damages, penalty or forfeiture awarded, besides costs. The court may, when it shall be necessary for the protection of such sureties, stay execution on any judgment rendered in such actions until the final determination of any actions so previously commenced and until the final determination of any other action commenced before judgment entered in any such action.

19.05 Execution; lien of judgment. (1) Whenever a judgment is rendered against any officer and the officer's sureties on the officer's official bond in any court other than the circuit court of the county in which the officer's official bond is filed, no execution for the collection of the judgment shall issue from the other court unless the plaintiff, the plaintiff's agent or the plaintiff's attorney shall make and file with the court an affidavit showing each of the following:

(a) That no other judgment has been rendered in any court in an action upon the officer's bond against the sureties of the bond that remains in whole or in part unpaid.

(b) That no other action upon the officer's bond against the sureties was pending and undetermined in any other court at the time of the entry of the judgment.

(2) A transcript of a judgment described in sub. (1) may be entered in the judgment and lien docket in other counties, shall constitute a lien, and may be enforced, in all respects the same as if it were an ordinary judgment, for the recovery of money, except as provided otherwise in sub. (1).

History: 1991 a. 316; 1995 a. 224.

19.06 Sureties, how relieved. Whenever several judgments shall be recovered against the sureties on any official bond in actions which shall have been commenced before the date of the entry of the last of such judgments the aggregate of which, exclusive of costs, shall exceed the sum for which such sureties remain liable at the time of the commencement of such actions, they may discharge themselves from all further liability upon such judgments by paying into court the sum for which they are then liable, together with the costs recovered on such judgments; or the court may, upon motion supported by affidavit, order that no execution for more than a proportional share of such judgments shall be issued thereon against the property of such sureties or either of them and that upon payment or collection of such proportional share they shall be discharged from the judgment or judgments upon which such proportional share shall be paid or collected. When the money is paid into court by the sureties as above specified the same, exclusive of the costs so paid in, shall be distributed by an order of the court to the several plaintiffs in such judgments in proportion to the amount of their respective judgments. But every judgment shall have precedence of payment over all judgments in other actions commenced after the date of the recovery of such judgment.

History: 1979 c. 110 s. 60 (11).

19.07 Bonds of public officers and employees. (1) CIVIL SERVICE EMPLOYEES; BLANKET BONDS. (a) The surety bond of any civil service employee of a city, village, town or county may be canceled in the manner provided by sub. (3).

(b) Any number of officers, department heads or employees may be combined in a schedule or blanket bond, where such bond is to be filed in the same place, and in the event such bond is executed by a corporate surety company, payment of the premium therefor is to be made from the same fund or appropriation prescribed in s. 19.01.

(2) CONTINUATION OF OBLIGATION. Unless canceled pursuant to this section, every such bond shall continue in full force and effect.

(3) CANCELLATION OF BOND. (a) Any city, village, town or county by their respective governing body may cancel such bond or bonds of any one employee or any number of employees by giving written notice to the surety by registered mail, such cancellation to be effective 15 days after receipt of such notice.

(b) When a surety, either personal or corporate, on such bond, shall desire to be released from such bond, the surety may give notice in writing that the surety desires to be released by giving written notice by registered mail, to the clerk of the respective city, village, town or county, and such cancellation shall be permitted if approved by the governing body thereof, such cancellation to be effective 15 days after receipt of such notice. This section shall not be construed to operate as a release of the sureties for liabilities incurred previous to the expiration of the 15 days' notice.

(c) Whenever a surety bond is canceled in the manner provided by this section, a proportional refund shall be made of the premium paid thereon.

History: 1979 c. 110 s. 60 (11); 1991 a. 316; 1993 a. 246.

19.10 Oaths. Each of the officers enumerated in s. 8.25 (4) (a) or (5) shall take and subscribe the oath of office prescribed by article IV, section 28, of the constitution, as follows: The governor and lieutenant governor, before entering upon the duties of office; the secretary of state, treasurer, attorney general, state superintendent and each district attorney, within 20 days after receiving notice of election and before entering upon the duties of office.

History: 1983 a. 192; 1989 a. 31; 1991 a. 39.

19.11 Official bonds. (1) The secretary of state, treasurer and attorney general shall each furnish a bond to the state, at the time each takes and subscribes the oath of office required of that officer, conditioned for the faithful discharge of the duties of the office, and the officer's duties as a member of the board of commissioners of public lands, and in the investment of the funds arising therefrom. The bond of each of said officers shall be further conditioned for the faithful performance by all persons appointed or employed by the officer in his or her office of their duties and trusts therein, and for the delivery over to the officer's successor in office, or to any person authorized by law to receive the same, of all moneys, books, records, deeds, bonds, securities and other property and effects of whatsoever nature belonging to the officer's offices.

(2) Each of said bonds shall be subject to the approval of the governor and shall be guaranteed by resident freeholders of this state, or by a surety company as provided in s. 632.17 (2). The amount of each such bond, and the number of sureties thereon if guaranteed by resident freeholders, shall be as follows: secretary of state, $25,000, with sufficient sureties; treasurer, $100,000, with not less than 6 sureties; and the attorney general, $10,000, with not less than 3 sureties.

(3) The attorney general shall renew the bond required under this section in a larger amount and with additional security, and the

2009−10 Wis. Stats. database updated and current through 2011 Wis. Act 39 and July 25, 2011. Statutory changes effective on or prior to 9−1−11 are printed as if currently in effect. Statutory changes effective after 9−1−11 are designated by NOTES. See Are The Statutes on this Website Official?

Electronic reproduction of 2009−10 Wis. Stats. database, current through 2011 Wis. Act 39 and July 25, 2011.

treasurer shall give an additional bond, when required by the governor.

(4) The governor shall require the treasurer to give additional bond, within such time, in such reasonable amount not exceeding the funds in the treasury, and with such security as the governor shall direct and approve, whenever the funds in the treasury exceed the amount of the treasurer's bond; or whenever the governor deems the treasurer's bond insufficient by reason of the insolvency, death or removal from the state of any of the sureties, or from any other cause.

History: 1975 c. 375 s. 44; 1991 a. 316.

19.12 Bond premiums payable from public funds. Any public officer required by law to give a suretyship obligation may pay the lawful premium for the execution of the obligation out of any moneys available for the payment of expenses of the office or department, unless payment is otherwise provided for or is prohibited by law.

History: 1977 c. 339.

SUBCHAPTER II

PUBLIC RECORDS AND PROPERTY

19.21 Custody and delivery of official property and records. (1) Each and every officer of the state, or of any county, town, city, village, school district, or other municipality or district, is the legal custodian of and shall safely keep and preserve all property and things received from the officer's predecessor or other persons and required by law to be filed, deposited, or kept in the officer's office, or which are in the lawful possession or control of the officer or the officer's deputies, or to the possession or control of which the officer or the officer's deputies may be lawfully entitled, as such officers.

(2) Upon the expiration of each such officer's term of office, or whenever the office becomes vacant, the officer, or on the officer's death the officer's legal representative, shall on demand deliver to the officer's successor all such property and things then in the officer's custody, and the officer's successor shall receipt therefor to said officer, who shall file said receipt, as the case may be, in the office of the secretary of state, county clerk, town clerk, city clerk, village clerk, school district clerk, or clerk or other secretarial officer of the municipality or district, respectively; but if a vacancy occurs before such successor is qualified, such property and things shall be delivered to and be receipted for by such secretary or clerk, respectively, on behalf of the successor, to be delivered to such successor upon the latter's receipt.

(3) Any person who violates this section shall, in addition to any other liability or penalty, civil or criminal, forfeit not less than $25 nor more than $2,000; such forfeiture to be enforced by a civil action on behalf of, and the proceeds to be paid into the treasury of the state, municipality, or district, as the case may be.

(4) (a) Any city council, village board or town board may provide by ordinance for the destruction of obsolete public records. Prior to the destruction at least 60 days' notice in writing of such destruction shall be given the historical society which shall preserve any such records it determines to be of historical interest. The historical society may, upon application, waive such notice. No assessment roll containing forest crop acreage may be destroyed without prior approval of the secretary of revenue. This paragraph does not apply to school records of a 1st class city school district.

(b) The period of time any town, city or village public record is kept before destruction shall be as prescribed by ordinance unless a specific period of time is provided by statute. The period prescribed in the ordinance may not be less than 2 years with respect to water stubs, receipts of current billings and customer's ledgers of any municipal utility, and 7 years for other records unless a shorter period has been fixed by the public records board under s. 16.61 (3) (e) and except as provided under sub. (7). This paragraph does not apply to school records of a 1st class city school district.

(c) Any local governmental unit or agency may provide for the keeping and preservation of public records kept by that governmental unit through the use of microfilm or another reproductive device, optical imaging or electronic formatting. A local governmental unit or agency shall make such provision by ordinance or resolution. Any such action by a subunit of a local governmental unit or agency shall be in conformity with the action of the unit or agency of which it is a part. Any photographic reproduction of a record authorized to be reproduced under this paragraph is deemed an original record for all purposes if it meets the applicable standards established in ss. 16.61 (7) and 16.612. This paragraph does not apply to public records kept by counties electing to be governed by ch. 228.

(cm) Paragraph (c) does not apply to court records kept by a clerk of circuit court and subject to SCR chapter 72.

(5) (a) Any county having a population of 500,000 or more may provide by ordinance for the destruction of obsolete public records, except for court records subject to SCR chapter 72.

(b) Any county having a population of less than 500,000 may provide by ordinance for the destruction of obsolete public records, subject to s. 59.52 (4) (b) and (c), except for court records governed by SCR chapter 72.

(c) The period of time any public record shall be kept before destruction shall be determined by ordinance except that in all counties the specific period of time expressed within s. 7.23 or 59.52 (4) (a) or any other law requiring a specific retention period shall apply. The period of time prescribed in the ordinance for the destruction of all records not governed by s. 7.23 or 59.52 (4) (a) or any other law prescribing a specific retention period may not be less than 7 years, unless a shorter period is fixed by the public records board under s. 16.61 (3) (e).

(d) 1. Except as provided in subd. 2., prior to any destruction of records under this subsection, except those specified within s. 59.52 (4) (a), at least 60 days' notice of such destruction shall be given in writing, to the historical society, which may preserve any records it determines to be of historical interest. Notice is not required for any records for which destruction has previously been approved by the historical society or in which the society has indicated that it has no interest for historical purposes. Records which have a confidential character while in the possession of the original custodian shall retain such confidential character after transfer to the historical society unless the director of the historical society, with the concurrence of the original custodian, determines that such records shall be made accessible to the public under such proper and reasonable rules as the historical society promulgates.

2. Subdivision 1. does not apply to patient health care records, as defined in s. 146.81 (4), that are in the custody or control of a local health department, as defined in s. 250.01 (4).

(e) The county board of any county may provide, by ordinance, a program for the keeping, preservation, retention and disposition of public records including the establishment of a committee on public records and may institute a records management service for the county and may appropriate funds to accomplish such purposes.

(f) District attorney records are state records and are subject to s. 978.07.

(6) A school district may provide for the destruction of obsolete school records. Prior to any such destruction, at least 60 days' notice in writing of such destruction shall be given to the historical society, which shall preserve any records it determines to be of historical interest. The historical society may, upon application, waive the notice. The period of time a school district record shall be kept before destruction shall be not less than 7 years, unless a shorter period is fixed by the public records board under s. 16.61

Electronic reproduction of 2009−10 Wis. Stats. database, current through 2011 Wis. Act 39 and July 25, 2011.

(3) (e) and except as provided under sub. (7). This section does not apply to pupil records under s. 118.125.

(7) Notwithstanding any minimum period of time for retention set under s. 16.61 (3) (e), any taped recording of a meeting, as defined in s. 19.82 (2), by any governmental body, as defined under s. 19.82 (1), of a city, village, town or school district may be destroyed no sooner than 90 days after the minutes have been approved and published if the purpose of the recording was to make minutes of the meeting.

(8) Any metropolitan sewerage commission created under ss. 200.21 to 200.65 may provide for the destruction of obsolete commission records. No record of the metropolitan sewerage district may be destroyed except by action of the commission specifically authorizing the destruction of that record. Prior to any destruction of records under this subsection, the commission shall give at least 60 days' prior notice of the proposed destruction to the state historical society, which may preserve records it determines to be of historical interest. Upon the application of the commission, the state historical society may waive this notice. Except as provided under sub. (7), the commission may only destroy a record under this subsection after 7 years elapse from the date of the record's creation, unless a shorter period is fixed by the public records board under s. 16.61 (3) (e).

History: 1971 c. 215; 1975 c. 41 s. 52; 1977 c. 202; 1979 c. 35, 221; 1981 c. 191, 282, 335; 1981 c. 350 s. 13; 1981 c. 391; 1983 a. 532; 1985 a. 180 ss. 22, 30m; 1985 a. 225; 1985 a. 332 s. 251 (1); Sup. Ct. Order, 136 Wis. 2d xi (1987); 1987 a. 147 ss. 20, 25; 1989 a. 248; 1991 a. 39, 185, 316; 1993 a. 27, 60, 172; 1995 a. 27, 201; 1999 a. 150 s. 672.

Sub. (1) provides that a police chief, as an officer of a municipality, is the legal custodian of all records of that officer's department. Town of LaGrange v. Auchinleck, 216 Wis. 2d 84, 573 N.W.2d 232 (Ct. App. 1997), 96−3313.

This section relates to records retention and is not a part of the public records law. An agency's alleged failure to keep sought−after records may not be attacked under the public records law. Gehl v. Connors, 2007 WI App 238, 306 Wis. 2d 247, 742 N.W.2d 530, 06−2455.

Under sub. (1), district attorneys must indefinitely preserve papers of a documentary nature evidencing activities of prosecutor's office. 68 Atty. Gen. 17.

A county with a population under 500,000 may by ordinance under s. 19.21 (6), [now s. 19.21 (5)] provide for the destruction of obsolete case records maintained by the county social services agency under s. 48.59 (1). 70 Atty. Gen. 196.

A VTAE (technical college) district is a "school district" under s. 19.21 (7) [now s. 19.21 (6)]. 71 Atty. Gen. 9.

19.22 Proceedings to compel the delivery of official property. (1) If any public officer refuses or neglects to deliver to his or her successor any official property or things as required in s. 19.21, or if the property or things shall come to the hands of any other person who refuses or neglects, on demand, to deliver them to the successor in the office, the successor may make complaint to any circuit judge for the county where the person refusing or neglecting resides. If the judge is satisfied by the oath of the complainant and other testimony as may be offered that the property or things are withheld, the judge shall grant an order directing the person so refusing to show cause, within some short and reasonable time, why the person should not be compelled to deliver the property or things.

(2) At the time appointed, or at any other time to which the matter may be adjourned, upon due proof of service of the order issued under sub. (1), if the person complained against makes affidavit before the judge that the person has delivered to the person's successor all of the official property and things in the person's custody or possession pertaining to the office, within the person's knowledge, the person complained against shall be discharged and all further proceedings in the matter before the judge shall cease.

(3) If the person complained against does not make such affidavit the matter shall proceed as follows:

(a) The judge shall inquire further into the matters set forth in the complaint, and if it appears that any such property or things are withheld by the person complained against the judge shall by warrant commit the person complained against to the county jail, there to remain until the delivery of such property and things to the complainant or until the person complained against be otherwise discharged according to law.

(b) If required by the complainant the judge shall also issue a warrant, directed to the sheriff or any constable of the county, commanding the sheriff or constable in the daytime to search such places as shall be designated in such warrant for such official property and things as were in the custody of the officer whose term of office expired or whose office became vacant, or of which the officer was the legal custodian, and seize and bring them before the judge issuing such warrant.

(c) When any such property or things are brought before the judge by virtue of such warrant, the judge shall inquire whether the same pertain to such office, and if it thereupon appears that the property or things pertain thereto the judge shall order the delivery of the property or things to the complainant.

History: 1977 c. 449; 1991 a. 316; 1993 a. 213.

19.23 Transfer of records or materials to historical society. (1) Any public records, in any state office, that are not required for current use may, in the discretion of the public records board, be transferred into the custody of the historical society, as provided in s. 16.61.

(2) The proper officer of any county, city, village, town, school district or other local governmental unit, may under s. 44.09 (1) offer title and transfer custody to the historical society of any records deemed by the society to be of permanent historical importance.

(3) The proper officer of any court may, on order of the judge of that court, transfer to the historical society title to such court records as have been photographed or microphotographed or which have been on file for at least 75 years, and which are deemed by the society to be of permanent historical value.

(4) Any other articles or materials which are of historic value and are not required for current use may, in the discretion of the department or agency where such articles or materials are located, be transferred into the custody of the historical society as trustee for the state, and shall thereupon become part of the permanent collections of said society.

History: 1975 c. 41 s. 52; 1981 c. 350 s. 13; 1985 a. 180 s. 30m; 1987 a. 147 s. 25; 1991 a. 226; 1995 a. 27.

19.24 Refusal to deliver money, etc., to successor. Any public officer whatever, in this state, who shall, at the expiration of the officer's term of office, refuse or willfully neglect to deliver, on demand, to the officer's successor in office, after such successor shall have been duly qualified and be entitled to said office according to law, all moneys, records, books, papers or other property belonging to the office and in the officer's hands or under the officer's control by virtue thereof, shall be imprisoned not more than 6 months or fined not more than $100.

History: 1991 a. 316.

19.25 State officers may require searches, etc., without fees. The secretary of state, treasurer and attorney general, respectively, are authorized to require searches in the respective offices of each other and in the offices of the clerk of the supreme court, of the court of appeals, of the circuit courts, of the registers of deeds for any papers, records or documents necessary to the discharge of the duties of their respective offices, and to require copies thereof and extracts therefrom without the payment of any fee or charge whatever.

History: 1977 c. 187, 449.

19.31 Declaration of policy. In recognition of the fact that a representative government is dependent upon an informed electorate, it is declared to be the public policy of this state that all persons are entitled to the greatest possible information regarding the affairs of government and the official acts of those officers and employees who represent them. Further, providing persons with such information is declared to be an essential function of a representative government and an integral part of the routine duties of officers and employees whose responsibility it is to provide such information. To that end, ss. 19.32 to 19.37 shall be construed in every instance with a presumption of complete public access, con-

Electronic reproduction of 2009−10 Wis. Stats. database, current through 2011 Wis. Act 39 and July 25, 2011.

sistent with the conduct of governmental business. The denial of public access generally is contrary to the public interest, and only in an exceptional case may access be denied.

History: 1981 c. 335, 391.

An agency cannot promulgate an administrative rule that creates an exception to the open records law. Chavala v. Bubolz, 204 Wis. 2d 82, 552 N.W.2d 892 (Ct. App. 1996), 95−3120.

Although the requester referred to the federal freedom information act, a letter that clearly described open records and had all the earmarkings of an open records request was in fact an open records request and triggered, at minimum, a duty to respond. ECO, Inc. v. City of Elkhorn, 2002 WI App 302, 259 Wis. 2d 276, 655 N.W.2d 510, 02−0216.

The public records law addresses the duty to disclose records; it does not address the duty to retain records. An agency's alleged failure to keep sought−after records may not be attacked under the public records law. Section 19.21 relates to records retention and is not a part of the public records law. Gehl v. Connors, 2007 WI App 238, 306 Wis. 2d 247, 742 N.W.2d 530, 06−2455.

The Wisconsin public records law. 67 MLR 65 (1983).

Municipal responsibility under the Wisconsin revised public records law. Maloney. WBB Jan. 1983.

The public records law and the Wisconsin department of revenue. Boykoff. WBB Dec. 1983.

The Wis. open records act: an update on issues. Trubek and Foley. WBB Aug. 1986.

Toward a More Open and Accountable Government: A Call For Optimal Disclosure Under the Wisconsin Open Records Law. Roang. 1994 WLR 719.

Wisconsin's Public−Records Law: Preserving the Presumption of Complete Public Access in the Age of Electronic Records. Holcomb & Isaac. 2008 WLR 515.

Getting the Best of Both Worlds: Open Government and Economic Development. Westerberg. Wis. Law. Feb. 2009.

19.32 Definitions. As used in ss. 19.33 to 19.39:

(1) "Authority" means any of the following having custody of a record: a state or local office, elected official, agency, board, commission, committee, council, department or public body corporate and politic created by constitution, law, ordinance, rule or order; a governmental or quasi−governmental corporation except for the Bradley center sports and entertainment corporation; a local exposition district under subch. II of ch. 229; a long−term care district under s. 46.2895; any court of law; the assembly or senate; a nonprofit corporation which receives more than 50% of its funds from a county or a municipality, as defined in s. 59.001 (3), and which provides services related to public health or safety to the county or municipality; or a formally constituted subunit of any of the foregoing.

(1b) "Committed person" means a person who is committed under ch. 51, 971, 975 or 980 and who is placed in an inpatient treatment facility, during the period that the person's placement in the inpatient treatment facility continues.

(1bg) "Employee" means any individual who is employed by an authority, other than an individual holding local public office or a state public office, or any individual who is employed by an employer other than an authority.

(1c) "Incarcerated person" means a person who is incarcerated in a penal facility or who is placed on probation and given confinement under s. 973.09 (4) as a condition of placement, during the period of confinement for which the person has been sentenced.

(1d) "Inpatient treatment facility" means any of the following:

(a) A mental health institute, as defined in s. 51.01 (12).

(c) A facility or unit for the institutional care of sexually violent persons specified under s. 980.065.

(d) The Milwaukee County mental health complex established under s. 51.08.

(1de) "Local governmental unit" has the meaning given in s. 19.42 (7u).

(1dm) "Local public office" has the meaning given in s. 19.42 (7w), and also includes any appointive office or position of a local governmental unit in which an individual serves as the head of a department, agency, or division of the local governmental unit, but does not include any office or position filled by a municipal employee, as defined in s. 111.70 (1) (i).

(1e) "Penal facility" means a state prison under s. 302.01, county jail, county house of correction or other state, county or municipal correctional or detention facility.

(1m) "Person authorized by the individual" means the parent, guardian, as defined in s. 48.02 (8), or legal custodian, as defined in s. 48.02 (11), of a child, as defined in s. 48.02 (2), the guardian of an individual adjudicated incompetent in this state, the personal representative or spouse of an individual who is deceased, or any person authorized, in writing, by the individual to exercise the rights granted under this section.

(1r) "Personally identifiable information" has the meaning specified in s. 19.62 (5).

(2) "Record" means any material on which written, drawn, printed, spoken, visual or electromagnetic information is recorded or preserved, regardless of physical form or characteristics, which has been created or is being kept by an authority. "Record" includes, but is not limited to, handwritten, typed or printed pages, maps, charts, photographs, films, recordings, tapes (including computer tapes), computer printouts and optical disks. "Record" does not include drafts, notes, preliminary computations and like materials prepared for the originator's personal use or prepared by the originator in the name of a person for whom the originator is working; materials which are purely the personal property of the custodian and have no relation to his or her office; materials to which access is limited by copyright, patent or bequest; and published materials in the possession of an authority other than a public library which are available for sale, or which are available for inspection at a public library.

(2g) "Record subject" means an individual about whom personally identifiable information is contained in a record.

(3) "Requester" means any person who requests inspection or copies of a record, except a committed or incarcerated person, unless the person requests inspection or copies of a record that contains specific references to that person or his or her minor children for whom he or she has not been denied physical placement under ch. 767, and the record is otherwise accessible to the person by law.

(4) "State public office" has the meaning given in s. 19.42 (13), but does not include a position identified in s. 20.923 (6) (f) to (gm).

History: 1981 c. 335; 1985 a. 26, 29, 332; 1987 a. 305; 1991 a. 39, 1991 a. 269 ss. 26pd, 33b; 1993 a. 215, 263, 491; 1995 a. 158; 1997 a. 79, 94; 1999 a. 9; 2001 a. 16; 2003 a. 47; 2005 a. 387; 2007 a. 20.

NOTE: 2003 Wis. Act 47, which affects this section, contains extensive explanatory notes.

A study commissioned by the corporation counsel and used in various ways was not a "draft" under sub. (2), although it was not in final form. A document prepared other than for the originator's personal use, although in preliminary form or marked "draft," is a record. Fox v. Bock, 149 Wis. 2d 403, 438 N.W.2d 589 (1989).

A settlement agreement containing a pledge of confidentiality and kept in the possession of a school district's attorney was a public record subject to public access. Journal/Sentinel v. Shorewood School Bd. 186 Wis. 2d 443, 521 N.W.2d 165 (Ct. App. 1994).

Individuals confined as sexually violent persons under ch. 980 are not "incarcerated" under sub. (1c). Klein v. Wisconsin Resource Center, 218 Wis. 2d 487, 582 N.W.2d 44 (Ct. App. 1998), 97−0679.

A nonprofit corporation that receives 50% of its funds from a municipality or county is an authority under sub. (1) regardless of the source from which the municipality or county obtained those funds. Cavey v. Walrath, 229 Wis. 2d 105, 598 N.W.2d 240 (Ct. App. 1999), 98−0072.

A person aggrieved by a request made under the open records law has standing to raise a challenge that the requested materials are not records because they fall within the exception for copyrighted material under sub. (2). Under the facts of this case, the language of sub. (2), when viewed in light of the fair use exception to copyright infringement, applied so that the disputed materials were records within the statutory definition. Zellner v. Cedarburg School District, 2007 WI 53, 300 Wis. 2d 290, 731 N.W.2d 240, 06−1143.

"Record" in sub. (2) and s. 19.35 (5) does not include identical copies of otherwise available records. A copy that is not different in some meaningful way from an original, regardless of the form of the original, is an identical copy. If a copy differs in some significant way for purposes of responding to an open records request, then it is not truly an identical copy, but instead a different record. Stone v. Board of Regents of the University of Wisconsin, 2007 WI App 223, 305 Wis. 2d 679, 741 N.W.2d 774, 06−2537.

A municipality's independent contractor assessor was not an authority under sub. (1) and was not a proper recipient of an open records request. In this case, only the municipalities themselves were the "authorities" for purposes of the open records

Electronic reproduction of 2009−10 Wis. Stats. database, current through 2011 Wis. Act 39 and July 25, 2011.

law. Accordingly, only the municipalities were proper recipients of the relevant open records requests. WIREdata, Inc. v. Village of Sussex, 2008 WI 69, 310 Wis. 2d 397, 751 N.W.2d 736, 05−1473.

A corporation is quasi−governmental if, based on the totality of circumstances, it resembles a governmental corporation in function, effect, or status, requiring a case−by−case analysis. Here, a primary consideration was that the body was funded exclusively by public tax dollars or interest thereon. Additionally, its office was located in the municipal building, it was listed on the city Web site, the city provided it with clerical support and office supplies, all its assets revert to the city if it ceases to exist, its books are open for city inspection, the mayor and another city official are directors, and it had no clients other than the city. State v. Beaver Dam Area Development Corporation, 2008 WI 90, 312 Wis. 2d 84, 752 N.W.2d 295, 06−0662.

In determining whether a document is a record under sub. (2), the focus is on the content of the document. To be a record, the content of the document must have a connection to a government function. In this case, the contents of teachers' personal e−mails had no connection to a government function and therefore are not records under sub. (2). The contents of personal e−mails could, however, be records under the public records law under certain circumstances. Schill v. Wisconsin Rapids School District, 2010 WI 86, 327 Wis. 2d 572, 786 N.W.2d 177, 08−0967.

"Records" must have some relation to the functions of the agency. 72 Atty. Gen. 99.

The treatment of drafts under the public records law is discussed. 77 Atty. Gen. 100.

Applying Open Records Policy to Wisconsin District Attorneys: Can Charging Guidelines Promote Public Awareness? Mayer. 1996 WLR 295.

19.33 Legal custodians. (1) An elected official is the legal custodian of his or her records and the records of his or her office, but the official may designate an employee of his or her staff to act as the legal custodian.

(2) The chairperson of a committee of elected officials, or the designee of the chairperson, is the legal custodian of the records of the committee.

(3) The cochairpersons of a joint committee of elected officials, or the designee of the cochairpersons, are the legal custodians of the records of the joint committee.

(4) Every authority not specified in subs. (1) to (3) shall designate in writing one or more positions occupied by an officer or employee of the authority or the unit of government of which it is a part as a legal custodian to fulfill its duties under this subchapter. In the absence of a designation the authority's highest ranking officer and the chief administrative officer, if any, are the legal custodians for the authority. The legal custodian shall be vested by the authority with full legal power to render decisions and carry out the duties of the authority under this subchapter. Each authority shall provide the name of the legal custodian and a description of the nature of his or her duties under this subchapter to all employees of the authority entrusted with records subject to the legal custodian's supervision.

(5) Notwithstanding sub. (4), if an authority specified in sub. (4) or the members of such an authority are appointed by another authority, the appointing authority may designate a legal custodian for records of the authority or members of the authority appointed by the appointing authority, except that if such an authority is attached for administrative purposes to another authority, the authority performing administrative duties shall designate the legal custodian for the authority for whom administrative duties are performed.

(6) The legal custodian of records maintained in a publicly owned or leased building or the authority appointing the legal custodian shall designate one or more deputies to act as legal custodian of such records in his or her absence or as otherwise required to respond to requests as provided in s. 19.35 (4). This subsection does not apply to members of the legislature or to members of any local governmental body.

(7) The designation of a legal custodian does not affect the powers and duties of an authority under this subchapter.

(8) No elected official of a legislative body has a duty to act as or designate a legal custodian under sub. (4) for the records of any committee of the body unless the official is the highest ranking officer or chief administrative officer of the committee or is designated the legal custodian of the committee's records by rule or by law.

History: 1981 c. 335.

The right to privacy law, s. 895.50, [now s. 995.50] does not affect the duties of a custodian of public records under s. 19.21, 1977 stats. 68 Atty. Gen. 68.

19.34 Procedural information. (1) Each authority shall adopt, prominently display and make available for inspection and copying at its offices, for the guidance of the public, a notice containing a description of its organization and the established times and places at which, the legal custodian under s. 19.33 from whom, and the methods whereby, the public may obtain information and access to records in its custody, make requests for records, or obtain copies of records, and the costs thereof. The notice shall also separately identify each position of the authority that constitutes a local public office or a state public office. This subsection does not apply to members of the legislature or to members of any local governmental body.

(2) (a) Each authority which maintains regular office hours at the location where records in the custody of the authority are kept shall permit access to the records of the authority at all times during those office hours, unless otherwise specifically authorized by law.

(b) Each authority which does not maintain regular office hours at the location where records in the custody of the authority are kept shall:

1. Permit access to its records upon at least 48 hours' written or oral notice of intent to inspect or copy a record; or

2. Establish a period of at least 2 consecutive hours per week during which access to the records of the authority is permitted. In such case, the authority may require 24 hours' advance written or oral notice of intent to inspect or copy a record.

(c) An authority imposing a notice requirement under par. (b) shall include a statement of the requirement in its notice under sub. (1), if the authority is required to adopt a notice under that subsection.

(d) If a record of an authority is occasionally taken to a location other than the location where records of the authority are regularly kept, and the record may be inspected at the place at which records of the authority are regularly kept upon one business day's notice, the authority or legal custodian of the record need not provide access to the record at the occasional location.

History: 1981 c. 335; 2003 a. 47.

NOTE: 2003 Wis. Act 47, which affects this section, contains extensive explanatory notes.

19.345 Time computation. In ss. 19.33 to 19.39, when a time period is provided for performing an act, whether the period is expressed in hours or days, the whole of Saturday, Sunday, and any legal holiday, from midnight to midnight, shall be excluded in computing the period.

History: 2003 a. 47.

NOTE: 2003 Wis. Act 47, which creates this section, contains extensive explanatory notes.

19.35 Access to records; fees. (1) RIGHT TO INSPECTION. (a) Except as otherwise provided by law, any requester has a right to inspect any record. Substantive common law principles construing the right to inspect, copy or receive copies of records shall remain in effect. The exemptions to the requirement of a governmental body to meet in open session under s. 19.85 are indicative of public policy, but may be used as grounds for denying public access to a record only if the authority or legal custodian under s. 19.33 makes a specific demonstration that there is a need to restrict public access at the time that the request to inspect or copy the record is made.

(am) In addition to any right under par. (a), any requester who is an individual or person authorized by the individual, has a right to inspect any record containing personally identifiable information pertaining to the individual that is maintained by an authority and to make or receive a copy of any such information. The right to inspect or copy a record under this paragraph does not apply to any of the following:

1. Any record containing personally identifiable information that is collected or maintained in connection with a complaint, investigation or other circumstances that may lead to an enforcement action, administrative proceeding, arbitration proceeding or

Electronic reproduction of 2009−10 Wis. Stats. database, current through 2011 Wis. Act 39 and July 25, 2011.

court proceeding, or any such record that is collected or maintained in connection with such an action or proceeding.

2. Any record containing personally identifiable information that, if disclosed, would do any of the following:

a. Endanger an individual's life or safety.

b. Identify a confidential informant.

c. Endanger the security, including the security of the population or staff, of any state prison under s. 302.01, jail, as defined in s. 165.85 (2) (bg), juvenile correctional facility, as defined in s. 938.02 (10p), secured residential care center for children and youth, as defined in s. 938.02 (15g), mental health institute, as defined in s. 51.01 (12), center for the developmentally disabled, as defined in s. 51.01 (3), or facility, specified under s. 980.065, for the institutional care of sexually violent persons.

d. Compromise the rehabilitation of a person in the custody of the department of corrections or detained in a jail or facility identified in subd. 2. c.

3. Any record that is part of a records series, as defined in s. 19.62 (7), that is not indexed, arranged or automated in a way that the record can be retrieved by the authority maintaining the records series by use of an individual's name, address or other identifier.

(b) Except as otherwise provided by law, any requester has a right to inspect a record and to make or receive a copy of a record. If a requester appears personally to request a copy of a record that permits photocopying, the authority having custody of the record may, at its option, permit the requester to photocopy the record or provide the requester with a copy substantially as readable as the original.

(c) Except as otherwise provided by law, any requester has a right to receive from an authority having custody of a record which is in the form of a comprehensible audio tape recording a copy of the tape recording substantially as audible as the original. The authority may instead provide a transcript of the recording to the requester if he or she requests.

(d) Except as otherwise provided by law, any requester has a right to receive from an authority having custody of a record which is in the form of a video tape recording a copy of the tape recording substantially as good as the original.

(e) Except as otherwise provided by law, any requester has a right to receive from an authority having custody of a record which is not in a readily comprehensible form a copy of the information contained in the record assembled and reduced to written form on paper.

(em) If an authority receives a request to inspect or copy a record that is in handwritten form or a record that is in the form of a voice recording which the authority is required to withhold or from which the authority is required to delete information under s. 19.36 (8) (b) because the handwriting or the recorded voice would identify an informant, the authority shall provide to the requester, upon his or her request, a transcript of the record or the information contained in the record if the record or information is otherwise subject to public inspection and copying under this subsection.

(f) Notwithstanding par. (b) and except as otherwise provided by law, any requester has a right to inspect any record not specified in pars. (c) to (e) the form of which does not permit copying. If a requester requests permission to photograph the record, the authority having custody of the record may permit the requester to photograph the record. If a requester requests that a photograph of the record be provided, the authority shall provide a good quality photograph of the record.

(g) Paragraphs (a) to (c), (e) and (f) do not apply to a record which has been or will be promptly published with copies offered for sale or distribution.

(h) A request under pars. (a) to (f) is deemed sufficient if it reasonably describes the requested record or the information requested. However, a request for a record without a reasonable limitation as to subject matter or length of time represented by the record does not constitute a sufficient request. A request may be made orally, but a request must be in writing before an action to enforce the request is commenced under s. 19.37.

(i) Except as authorized under this paragraph, no request under pars. (a) and (b) to (f) may be refused because the person making the request is unwilling to be identified or to state the purpose of the request. Except as authorized under this paragraph, no request under pars. (a) to (f) may be refused because the request is received by mail, unless prepayment of a fee is required under sub. (3) (f). A requester may be required to show acceptable identification whenever the requested record is kept at a private residence or whenever security reasons or federal law or regulations so require.

(j) Notwithstanding pars. (a) to (f), a requester shall comply with any regulations or restrictions upon access to or use of information which are specifically prescribed by law.

(k) Notwithstanding pars. (a), (am), (b) and (f), a legal custodian may impose reasonable restrictions on the manner of access to an original record if the record is irreplaceable or easily damaged.

(L) Except as necessary to comply with pars. (c) to (e) or s. 19.36 (6), this subsection does not require an authority to create a new record by extracting information from existing records and compiling the information in a new format.

(2) FACILITIES. The authority shall provide any person who is authorized to inspect or copy a record under sub. (1) (a), (am), (b) or (f) with facilities comparable to those used by its employees to inspect, copy and abstract the record during established office hours. An authority is not required by this subsection to purchase or lease photocopying, duplicating, photographic or other equipment or to provide a separate room for the inspection, copying or abstracting of records.

(3) FEES. (a) An authority may impose a fee upon the requester of a copy of a record which may not exceed the actual, necessary and direct cost of reproduction and transcription of the record, unless a fee is otherwise specifically established or authorized to be established by law.

(b) Except as otherwise provided by law or as authorized to be prescribed by law an authority may impose a fee upon the requester of a copy of a record that does not exceed the actual, necessary and direct cost of photographing and photographic processing if the authority provides a photograph of a record, the form of which does not permit copying.

(c) Except as otherwise provided by law or as authorized to be prescribed by law, an authority may impose a fee upon a requester for locating a record, not exceeding the actual, necessary and direct cost of location, if the cost is $50 or more.

(d) An authority may impose a fee upon a requester for the actual, necessary and direct cost of mailing or shipping of any copy or photograph of a record which is mailed or shipped to the requester.

(e) An authority may provide copies of a record without charge or at a reduced charge where the authority determines that waiver or reduction of the fee is in the public interest.

(f) An authority may require prepayment by a requester of any fee or fees imposed under this subsection if the total amount exceeds $5. If the requester is a prisoner, as defined in s. 301.01 (2), or is a person confined in a federal correctional institution located in this state, and he or she has failed to pay any fee that was imposed by the authority for a request made previously by that requester, the authority may require prepayment both of the amount owed for the previous request and the amount owed for the current request.

(g) Notwithstanding par. (a), if a record is produced or collected by a person who is not an authority pursuant to a contract entered into by that person with an authority, the authorized fees for obtaining a copy of the record may not exceed the actual, necessary, and direct cost of reproduction or transcription of the

Electronic reproduction of 2009−10 Wis. Stats. database, current through 2011 Wis. Act 39 and July 25, 2011.

record incurred by the person who makes the reproduction or transcription, unless a fee is otherwise established or authorized to be established by law.

(4) TIME FOR COMPLIANCE AND PROCEDURES. (a) Each authority, upon request for any record, shall, as soon as practicable and without delay, either fill the request or notify the requester of the authority's determination to deny the request in whole or in part and the reasons therefor.

(b) If a request is made orally, the authority may deny the request orally unless a demand for a written statement of the reasons denying the request is made by the requester within 5 business days of the oral denial. If an authority denies a written request in whole or in part, the requester shall receive from the authority a written statement of the reasons for denying the written request. Every written denial of a request by an authority shall inform the requester that if the request for the record was made in writing, then the determination is subject to review by mandamus under s. 19.37 (1) or upon application to the attorney general or a district attorney.

(c) If an authority receives a request under sub. (1) (a) or (am) from an individual or person authorized by the individual who identifies himself or herself and states that the purpose of the request is to inspect or copy a record containing personally identifiable information pertaining to the individual that is maintained by the authority, the authority shall deny or grant the request in accordance with the following procedure:

1. The authority shall first determine if the requester has a right to inspect or copy the record under sub. (1) (a).

2. If the authority determines that the requester has a right to inspect or copy the record under sub. (1) (a), the authority shall grant the request.

3. If the authority determines that the requester does not have a right to inspect or copy the record under sub. (1) (a), the authority shall then determine if the requester has a right to inspect or copy the record under sub. (1) (am) and grant or deny the request accordingly.

(5) RECORD DESTRUCTION. No authority may destroy any record at any time after the receipt of a request for inspection or copying of the record under sub. (1) until after the request is granted or until at least 60 days after the date that the request is denied or, if the requester is a committed or incarcerated person, until at least 90 days after the date that the request is denied. If an authority receives written notice that an action relating to a record has been commenced under s. 19.37, the record may not be destroyed until after the order of the court in relation to such record is issued and the deadline for appealing that order has passed, or, if appealed, until after the order of the court hearing the appeal is issued. If the court orders the production of any record and the order is not appealed, the record may not be destroyed until after the request for inspection or copying is granted.

(6) ELECTED OFFICIAL RESPONSIBILITIES. No elected official is responsible for the record of any other elected official unless he or she has possession of the record of that other official.

(7) LOCAL INFORMATION TECHNOLOGY AUTHORITY RESPONSIBILITY FOR LAW ENFORCEMENT RECORDS. (a) In this subsection:

1. "Law enforcement agency" has the meaning given s. 165.83 (1) (b).

2. "Law enforcement record" means a record that is created or received by a law enforcement agency and that relates to an investigation conducted by a law enforcement agency or a request for a law enforcement agency to provide law enforcement services.

3. "Local information technology authority" means a local public office or local governmental unit whose primary function is information storage, information technology processing, or other information technology usage.

(b) For purposes of requests for access to records under sub. (1), a local information technology authority that has custody of a law enforcement record for the primary purpose of information storage, information technology processing, or other information technology usage is not the legal custodian of the record. For such purposes, the legal custodian of a law enforcement record is the authority for which the record is stored, processed, or otherwise used.

(c) A local information technology authority that receives a request under sub. (1) for access to information in a law enforcement record shall deny any portion of the request that relates to information in a local law enforcement record.

History: 1981 c. 335, 391; 1991 a. 39, 1991 a. 269 ss. 34am, 40am; 1993 a. 93; 1995 a. 77, 158; 1997 a. 94, 133; 1999 a. 9; 2001 a. 16; 2005 a. 344; 2009 a. 259, 370.

NOTE: The following annotations relate to public records statutes in effect prior to the creation of s. 19.35 by ch. 335, laws of 1981.

A mandamus petition to inspect a county hospital's statistical, administrative, and other records not identifiable with individual patients, states a cause of action under this section. State ex rel. Dalton v. Mundy, 80 Wis. 2d 190, 257 N.W.2d 877 (1977).

Police daily arrest lists must be open for public inspection. Newspapers, Inc. v. Breier, 89 Wis. 2d 417, 279 N.W.2d 179 (1979).

This section is a statement of the common law rule that public records are open to public inspection subject to common law limitations. Section 59.14 [now 59.20 (3)] is a legislative declaration granting persons who come under its coverage an absolute right of inspection subject only to reasonable administrative regulations. State ex rel. Bilder v. Town of Delavan, 112 Wis. 2d 539, 334 N.W.2d 252 (1983).

A newspaper had the right to intervene to protect its right to examine sealed court files. State ex rel. Bilder v. Town of Delavan 112 Wis. 2d 539, 334 N.W.2d 252 (1983).

Examination of birth records cannot be denied simply because the examiner has a commercial purpose. 58 Atty. Gen. 67.

Consideration of a resolution is a formal action of an administrative or minor governing body. When taken in a proper closed session, the resolution and result of the vote must be made available for public inspection absent a specific showing that the public interest would be adversely affected. 60 Atty. Gen. 9.

Inspection of public records obtained under official pledges of confidentiality may be denied if: 1) a clear pledge has been made in order to obtain the information; 2) the pledge was necessary to obtain the information; and 3) the custodian determines that the harm to the public interest resulting from inspection would outweigh the public interest in full access to public records. The custodian must permit inspection of information submitted under an official pledge of confidentiality if the official or agency had specific statutory authority to require its submission. 60 Atty. Gen. 284.

The right to inspection and copying of public records in decentralized offices is discussed. 61 Atty. Gen. 12.

Public records subject to inspection and copying by any person would include a list of students awaiting a particular program in a VTAE (technical college) district school. 61 Atty. Gen. 297.

The investment board can only deny members of the public from inspecting and copying portions of the minutes relating to the investment of state funds and documents pertaining thereto on a case−by−case basis if valid reasons for denial exist and are specially stated. 61 Atty. Gen. 361.

Matters and documents in the possession or control of school district officials containing information concerning the salaries, including fringe benefits, paid to individual teachers are matters of public record. 63 Atty. Gen. 143.

The department of administration probably had authority under s. 19.21 (1) and (2), 1973 stats., to provide a private corporation with camera−ready copy of session laws that is the product of a printout of computer stored public records if the costs are minimal. The state cannot contract on a continuing basis for the furnishing of this service. 63 Atty. Gen. 302.

The scope of the duty of the governor to allow members of the public to examine and copy public records in his custody is discussed. 63 Atty. Gen. 400.

The public's right to inspect land acquisition files of the department of natural resources is discussed. 63 Atty. Gen. 573.

Financial statements filed in connection with applications for motor vehicle dealers' and motor vehicle salvage dealers' licenses are public records, subject to limitations. 66 Atty. Gen. 302.

Sheriff's radio logs, intradepartmental documents kept by the sheriff, and blood test records of deceased automobile drivers in the hands of the sheriff are public records, subject to limitations. 67 Atty. Gen. 12.

Plans and specifications filed under s. 101.12 are public records and are available for public inspection. 67 Atty. Gen. 214.

Under s. 19.21 (1), district attorneys must indefinitely preserve papers of a documentary nature evidencing activities of prosecutor's office. 68 Atty. Gen. 17.

The right to examine and copy computer−stored information is discussed. 68 Atty. Gen. 231.

After the transcript of court proceedings is filed with the clerk of court, any person may examine or copy the transcript. 68 Atty. Gen. 313.

NOTE: The following annotations relate to s. 19.35.

Although a meeting was properly closed, in order to refuse inspection of records of the meeting, the custodian was required by sub. (1) (a) to state specific and sufficient public policy reasons why the public's interest in nondisclosure outweighed the right of inspection. Oshkosh Northwestern Co. v. Oshkosh Library Board, 125 Wis. 2d 480, 373 N.W.2d 459 (Ct. App. 1985).

Courts must apply the open records balancing test to questions involving disclosure of court records. The public interests favoring secrecy must outweigh those favoring disclosure. C. L. v. Edson, 140 Wis. 2d 168, 409 N.W.2d 417 (Ct. App. 1987).

Public records germane to pending litigation were available under this section even though the discovery cutoff deadline had passed. State ex rel. Lank v. Rzentkowski, 141 Wis. 2d 846, 416 N.W.2d 635 (Ct. App. 1987).

To upheld a custodian's denial of access, an appellate court will inquire whether the trial court made a factual determination supported by the record of whether docu-

Electronic reproduction of 2009−10 Wis. Stats. database, current through 2011 Wis. Act 39 and July 25, 2011.

ments implicate a secrecy interest, and, if so, whether the secrecy interest outweighs the interests favoring release. Milwaukee Journal v. Call, 153 Wis. 2d 313, 450 N.W.2d 515 (Ct. App. 1989).

That releasing records would reveal a confidential informant's identity was a legally specific reason for denial of a records request. The public interest in not revealing the informant's identity outweighed the public interest in disclosure of the records. Mayfair Chrysler−Plymouth v. Baldarotta, 162 Wis. 2d 142, 469 N.W.2d 638 (1991).

Items subject to examination under s. 346.70 (4) (f) may not be withheld by the prosecution under a common law rule that investigative material may be withheld from a criminal defendant. State ex rel. Young v. Shaw, 165 Wis. 2d 276, 477 N.W.2d 340 (Ct. App. 1991).

Prosecutors' files are exempt from public access under the common law. State ex rel. Richards v. Foust, 165 Wis. 2d 429, 477 N.W.2d 608 (1991).

Records relating to pending claims against the state under s. 893.82 need not be disclosed under s. 19.35. Records of non−pending claims must be disclosed unless an *in camera* inspection reveals that the attorney−client privilege would be violated. George v. Record Custodian, 169 Wis. 2d 573, 485 N.W.2d 460 (Ct. App. 1992).

The public records law confers no exemption as of right on indigents from payment of fees under (3). George v. Record Custodian, 169 Wis. 2d 573, 485 N.W.2d 460 (Ct. App. 1992).

A settlement agreement containing a pledge of confidentiality and kept in the possession of a school district's attorney was a public record subject to public access under sub. (3). Journal/Sentinel v. School District of Shorewood, 186 Wis. 2d 443, 521 N.W.2d 165 (Ct. App. 1994).

The denial of a prisoner's information request regarding illegal behavior by guards on the grounds that it could compromise the guards' effectiveness and subject them to harassment was insufficient. State ex. rel. Ledford v. Turcotte, 195 Wis. 2d 244, 536 N.W.2d 130 (Ct. App. 1995), 94−2710.

The amount of prepayment required for copies may be based on a reasonable estimate. State ex rel. Hill v. Zimmerman, 196 Wis. 2d 419, 538 N.W.2d 608 (Ct. App. 1995), 94−1861.

The *Foust* decision does not automatically exempt all records stored in a closed prosecutorial file. The exemption is limited to material actually pertaining to the prosecution. Nichols v. Bennett, 199 Wis. 2d 268, 544 N.W.2d 428 (1996), 93−2480.

Department of Regulation and Licensing test scores were subject to disclosure under the open records law. Munroe v. Braatz, 201 Wis. 2d 442, 549 N.W.2d 452 (Ct. App. 1996), 95−2557.

Subs. (1) (i) and (3) (f) did not permit a demand for prepayment of $1.29 in response to a mail request for a record. Borzych v. Paluszcyk, 201 Wis. 2d 523, 549 N.W.2d 253 (Ct. App. 1996), 95−1711.

An agency cannot promulgate an administrative rule that creates an exception to the open records law. Chavala v. Bubolz, 204 Wis. 2d 82, 552 N.W.2d 892 (Ct. App. 1996), 95−3120.

While certain statutes grant explicit exceptions to the open records law, many statutes set out broad categories of records not open to an open records request. A custodian faced with such a broad statute must state with specificity a public policy reason for refusing to release the requested record. Chavala v. Bubolz, 204 Wis. 2d 82, 552 N.W.2d 892 (Ct. App. 1996), 95−3120.

The custodian is not authorized to comply with an open records request at some unspecified date in the future. Such a response constitutes a denial of the request. WTMJ, Inc. v. Sullivan, 204 Wis. 2d 452, 555 N.W.2d 125 (Ct. App. 1996), 96−0053.

Subject to the redaction of officers' home addresses and supervisors' conclusions and recommendations regarding discipline, police records regarding the use of deadly force were subject to public inspection. State ex rel. Journal/Sentinel, Inc. v. Arreola, 207 Wis. 2d 496, 558 N.W.2d 670 (Ct. App. 1996), 95−2956.

A public school student's interim grades are pupil records specifically exempted from disclosure under s. 118.125. If records are specifically exempted from disclosure, failure to specifically state reasons for denying an open records request for those records does not compel disclosure of those records. State ex rel. Blum v. Board of Education, 209 Wis. 2d 377, 565 N.W.2d 140 (Ct. App. 1997), 96−0758.

Requesting a copy of 180 hours of audiotape of "911" calls, together with a transcription of the tape and log of each transmission received, was a request without "reasonable limitation" and was not a "sufficient request" under sub. (1) (h). Schopper v. Gehring, 210 Wis. 2d 208, 565 N.W.2d 187 (Ct. App. 1997), 96−2782.

If the requested information is covered by an exempting statute that does not require a balancing of public interests, there is no need for a custodian to conduct such a balancing. Written denial claiming a statutory exception by citing the specific statute or regulation is sufficient. State ex rel. Savinski v. Kimble, 221 Wis. 2d 833, 586 N.W.2d 36 (Ct. App. 1998), 97−3356.

Protecting persons who supply information or opinions about an inmate to the parole commission is a public interest that may outweigh the public interest in access to documents that could identify those persons. State ex rel. Bergmann v. Faust, 226 Wis. 2d 273, 595 N.W.2d 75 (Ct. App. 1999), 98−2537.

The ultimate purchasers of municipal bonds from the bond's underwriter, whose only obligation was to purchase the bonds, were not "contractor's records under sub. (3). Machotka v. Village of West Salem, 2000 WI App 43, 233 Wis. 2d 106, 607 N.W.2d 319, 99−1163.

Sub. (1) (b) gives the record custodian, and not the requester, the choice of how a record will be copied. The requester cannot elect to use his or her own copying equipment without the custodian's permission. Grebner v. Schiebel, 2001 WI App 17, 240 Wis. 2d 551, 624 N.W.2d 892, 00−1549.

Requests for university admissions records focusing on test scores, class rank, grade point average, race, gender, ethnicity, and socio−economic background was not a request for personally identifiable information, and release was not barred by federal law or public policy. That the requests would require the university to redact information from thousands of documents under s. 19.36 (6) did not essentially require the university to create new records and, as such, did not provide grounds for denying the request under s. 19.35 (1) (L). Osborn v. Board of Regents of the University of Wisconsin System, 2002 WI 83, 254 Wis. 2d 266, 647 N.W.2d 158, 00−2861.

The police report of a closed investigation regarding a teacher's conduct that did not lead either to an arrest, prosecution, or any administrative disciplinary action, was subject to release. Linzmeyer v. Forcey, 2002 WI 84, 254 Wis. 2d 306, 646 N.W.2d 811, 01−0197.

The John Doe statute, s. 968.26, which authorizes secrecy in John Doe proceedings, is a clear statement of legislative policy and constitutes a specific exception to the public records law. On review of a petition for a writ stemming from a secret John Doe proceeding, the court of appeals may seal parts of a record in order to comply with existing secrecy orders issued by the John Doe judge. Unnamed Persons Numbers 1, 2, and 3 v. State, 2003 WI 30, 260 Wis. 2d 653, 660 N.W.2d 260, 01−3220.

Sub. (1) (am) is not subject to a balancing of interests. Therefore, the exceptions to sub. (1) (am) should not be narrowly construed. A requester who does not qualify for access to records under sub. (1) (am) will always have the right to seek records under sub. (1) (a), in which case the records custodian must determine whether the requested records are subject to a statutory or common law exception, and if not whether the strong presumption favoring access and disclosure is overcome by some even stronger public policy favoring limited access or nondisclosure determined by applying a balancing test. Hempel v. City of Baraboo, 2005 WI 120, 284 Wis. 2d 162, 699 N.W.2d 551, 03−0500.

Misconduct investigation and disciplinary records are not excepted from public disclosure under sub. (10) (d). Sub. (10) (b) is the only exception to the open records law relating to investigations of possible employee misconduct. Kroeplin v. DNR, 2006 WI App 227, 297 Wis. 2d 254, 725 N.W.2d 286, 05−1093.

Sub. (1) (a) does not mandate that, when a meeting is closed under s. 19.85, all records created for or presented at the meeting are exempt from disclosure. The court must still apply the balancing test articulated in *Linzmeyer*. Zellner v. Cedarburg School District, 2007 WI 53, 300 Wis. 2d 290, 731 N.W.2d 240, 06−1143.

A general request does not trigger the sub. (4) (c) review sequence. Sub. (4) (c) recites the procedure to be employed if an authority receives a request under (1) (a) or (am). An authority is an entity having custody of a record. The definition does not include a reviewing court. Seifert v. School District of Sheboygan Falls, 2007 WI App 207, 305 Wis. 2d 582, 740 N.W.2d 177, 06−2071.

The open records law cannot be used to circumvent established principles that shield attorney work product, nor can it be used as a discovery tool. The presumption of access under sub. (1) (a) is defeated because the attorney work product qualifies under the "otherwise provided by law" exception. Seifert v. School District of Sheboygan Falls, 2007 WI App 207, 305 Wis. 2d 582, 740 N.W.2d 177, 06−2071.

Sub. (1) (am) 1. plainly allows a records custodian to deny access to one who is, in effect, a potential adversary in litigation or other proceeding unless or until required to do so under the rules of discovery in actual litigation. The balancing of interests under sub. (1) (a) must include examining all the relevant factors in the context of the particular circumstances and may include the balancing the competing interests consider sub. (1) (am) 1. when evaluating the entire set of facts and making its specific demonstration of the need for withholding the records. Seifert v. School District of Sheboygan Falls, 2007 WI App 207, 305 Wis. 2d 582, 740 N.W.2d 177, 06−2071.

The sub. (1) (am) analysis is succinct. There is no balancing. There is no requirement that the investigation be current for the exemption for records "collected or maintained in connection with a complaint, investigation or other circumstances that may lead to . . . [a] court proceeding" to apply. Seifert v. School District of Sheboygan Falls, 2007 WI App 207, 305 Wis. 2d 582, 740 N.W.2d 177, 06−2071.

"Record" in sub. (5) and s. 19.32 (2) does not include identical copies of otherwise available records. A copy that is not different in some meaningful way from an original, regardless of the form of the original, is an identical copy. If a copy differs in some significant way for purposes of responding to an open records request, then it is not truly an identical copy, but instead a different record. Stone v. Board of Regents of the University of Wisconsin, 2007 WI App 223, 305 Wis. 2d 679, 741 N.W.2d 774, 06−2537.

Schopper does not permit a records custodian to deny a request based solely on the custodian's assertion that the request could reasonably be narrowed, nor does *Schopper* require that the custodian take affirmative steps to limit the search as a prerequisite to denying a request under sub. (1) (h). The fact that the request may result in the generation of a large volume of records is not, in itself, a sufficient reason to deny a request as not properly limited, but at some point, an overly broad request becomes sufficiently excessive to warrant rejection under sub. (1) (h). Gehl v. Connors, 2007 WI App 238, 306 Wis. 2d 247, 742 N.W.2d 530, 06−2455.

The public records law addresses the duty to disclose records; it does not address the duty to retain records. An agency's alleged failure to keep sought−after records may not be attacked under the public records law. Section 19.21 relates to records retention and is not a part of the public records law. Gehl v. Connors, 2007 WI App 238, 306 Wis. 2d 247, 742 N.W.2d 530, 06−2455.

Foust held that a common law categorical exception exists for records in the custody of a district attorney's office, not for records in the custody of a law enforcement agency. A sheriff's department is legally obligated to provide public access to records in its possession, which cannot be avoided by invoking a common law exception that is exclusive to the records of another custodian. That the same record was in the custody of both the law enforcement agency and the district attorney does not change the outcome. To the extent that a sheriff's department can articulate a policy reason why the public interest in disclosure is outweighed by the interest in withholding the particular record it may properly deny access. Portage Daily Register v. Columbia Co. Sheriff's Department, 2008 WI App 30, 308 Wis. 2d 357, 746 N.W.2d 525, 07−0323.

When requests are complex, municipalities should be afforded reasonable latitude in time for their responses. An authority should not be subjected to the burden and expense of a premature public records lawsuit while it is attempting in good faith to respond, or to determine how to respond, to a request. What constitutes a reasonable time for a response by an authority depends on the nature of the request, the staff and other resources available to the authority to process the request, the extent of the request, and other related considerations. WIREdata, Inc. v. Village of Sussex, 2008 WI 69, 310 Wis. 2d 397, 751 N.W.2d 736, 05−1473.

A custodian may not require a requester to pay the cost of an unrequested certification. Unless the fee for copies of records is established by law, a custodian may not charge more than the actual and direct cost of reproduction. 72 Atty. Gen. 36.

2009−10 Wis. Stats. database updated and current through 2011 Wis. Act 39 and July 25, 2011. Statutory changes effective on or prior to 9−1−11 are printed as if currently in effect. Statutory changes effective after 9−1−11 are designated by NOTES. See Are The Statutes on this Website Official?

Electronic reproduction of 2009−10 Wis. Stats. database, current through 2011 Wis. Act 39 and July 25, 2011.

Copying fees, but not location fees, may be imposed on a requester for the cost of a computer run. 72 Atty. Gen. 68.

The fee for copying public records is discussed. 72 Atty. Gen. 150.

Public records relating to employee grievances are not generally exempt from disclosure. Nondisclosure must be justified on a case−by−case basis. 73 Atty. Gen. 20.

The disclosure of an employee's birthdate, sex, ethnic heritage, and handicapped status is discussed. 73 Atty. Gen. 26.

The department of regulation and licensing may refuse to disclose records relating to complaints against health care professionals while the matters are merely "under investigation." Good faith disclosure of the records will not expose the custodian to liability for damages. Prospective continuing requests for records are not contemplated by public records law. 73 Atty. Gen. 37.

Prosecutors' case files are exempt from disclosure. 74 Atty. Gen. 4.

The relationship between the public records law and pledges of confidentiality in settlement agreements is discussed. 74 Atty. Gen. 14.

A computerized compilation of bibliographic records is discussed in relation to copyright law; a requester is entitled to a copy of a computer tape or a printout of information on the tape. 75 Atty. Gen. 133 (1986).

Ambulance records relating to medical history, condition, or treatment are confidential while other ambulance call records are subject to disclosure under the public records law. 78 Atty. Gen. 71.

Courts are likely to require disclosure of legislators' mailing and distribution lists absent a factual showing that the public interest in withholding the records outweighs the public interest in their release. OAG 2−03.

If a legislator custodian decides that a mailing or distribution list compiled and used for official purposes must be released under the public records statute, the persons whose names, addresses or telephone numbers are contained on the list are not entitled to notice and the opportunity to challenge the decision prior to release of the record. OAG 2−03.

Access Denied: How *Woznicki v. Erickson* Reversed the Statutory Presumption of Openness in the Wisconsin Open Records Law. Munro. 2002 WLR 1197.

19.356 Notice to record subject; right of action. **(1)** Except as authorized in this section or as otherwise provided by statute, no authority is required to notify a record subject prior to providing to a requester access to a record containing information pertaining to that record subject, and no person is entitled to judicial review of the decision of an authority to provide a requester with access to a record.

(2) (a) Except as provided in pars. (b) and (c) and as otherwise authorized or required by statute, if an authority decides under s. 19.35 to permit access to a record specified in this paragraph, the authority shall, before permitting access and within 3 days after making the decision to permit access, serve written notice of that decision on any record subject to whom the record pertains, either by certified mail or by personally serving the notice on the record subject. The notice shall briefly describe the requested record and include a description of the rights of the record subject under subs. (3) and (4). This paragraph applies only to the following records:

1. A record containing information relating to an employee that is created or kept by the authority and that is the result of an investigation into a disciplinary matter involving the employee or possible employment−related violation by the employee of a statute, ordinance, rule, regulation, or policy of the employee's employer.

2. A record obtained by the authority through a subpoena or search warrant.

3. A record prepared by an employer other than an authority, if that record contains information relating to an employee of that employer, unless the employee authorizes the authority to provide access to that information.

(b) Paragraph (a) does not apply to an authority who provides access to a record pertaining to an employee to the employee who is the subject of the record or to his or her representative to the extent required under s. 103.13 or to a recognized or certified collective bargaining representative to the extent required to fulfill a duty to bargain or pursuant to a collective bargaining agreement under ch. 111.

(c) Paragraph (a) does not apply to access to a record produced in relation to a function specified in s. 106.54 or 230.45 or subch. II of ch. 111 if the record is provided by an authority having responsibility for that function.

(3) Within 5 days after receipt of a notice under sub. (2) (a), a record subject may provide written notification to the authority of his or her intent to seek a court order restraining the authority from providing access to the requested record.

(4) Within 10 days after receipt of a notice under sub. (2) (a), a record subject may commence an action seeking a court order to restrain the authority from providing access to the requested record. If a record subject commences such an action, the record subject shall name the authority as a defendant. Notwithstanding s. 803.09, the requester may intervene in the action as a matter of right. If the requester does not intervene in the action, the authority shall notify the requester of the results of the proceedings under this subsection and sub. (5).

(5) An authority shall not provide access to a requested record within 12 days of sending a notice pertaining to that record under sub. (2) (a). In addition, if the record subject commences an action under sub. (4), the authority shall not provide access to the requested record during pendency of the action. If the record subject appeals or petitions for review of a decision of the court or the time for appeal or petition for review of a decision adverse to the record subject has not expired, the authority shall not provide access to the requested record until any appeal is decided, until the period for appealing or petitioning for review expires, until a petition for review is denied, or until the authority receives written notice from the record subject that an appeal or petition for review will not be filed, whichever occurs first.

(6) The court, in an action commenced under sub. (4), may restrain the authority from providing access to the requested record. The court shall apply substantive common law principles construing the right to inspect, copy, or receive copies of records in making its decision.

(7) The court, in an action commenced under sub. (4), shall issue a decision within 10 days after the filing of the summons and complaint and proof of service of the summons and complaint upon the defendant, unless a party demonstrates cause for extension of this period. In any event, the court shall issue a decision within 30 days after those filings are complete.

(8) If a party appeals a decision of the court under sub. (7), the court of appeals shall grant precedence to the appeal over all other matters not accorded similar precedence by law. An appeal shall be taken within the time period specified in s. 808.04 (1m).

(9) (a) Except as otherwise authorized or required by statute, if an authority decides under s. 19.35 to permit access to a record containing information relating to a record subject who is an officer or employee of the authority holding a local public office or a state public office, the authority shall, before permitting access and within 3 days after making the decision to permit access, serve written notice of that decision on the record subject, either by certified mail or by personally serving the notice on the record subject. The notice shall briefly describe the requested record and include a description of the rights of the record subject under par. (b).

(b) Within 5 days after receipt of a notice under par. (a), a record subject may augment the record to be released with written comments and documentation selected by the record subject. Except as otherwise authorized or required by statute, the authority under par. (a) shall release the record as augmented by the record subject.

History: 2003 a. 47.

NOTE: 2003 Wis. Act 47, which creates this section, contains extensive explanatory notes.

The right of a public employee to obtain de novo judicial review of an authority's decision to allow public access to certain records granted by this section is no broader than the common law right previously recognized. It is not a right to prevent disclosure solely on the basis of a public employee's privacy and reputational interests. The public's interest in not injuring the reputations of public employees must be given due consideration, but it is not controlling. Local 2489 v. Rock County, 2004 WI App 210, 277 Wis. 2d 208, 689 N.W.2d 644, 03−3101.

An intervenor as of right under the statute is "a party" under sub. (8) whose appeal is subject to the "time period specified in s. 808.04 (1m)." The only time period referenced in s. 808.04 (1m) is 20 days. Zellner v. Herrick, 2009 WI 80, 319 Wis. 2d 532, 770 N.W.2d 305, 07−2584.

Sub. (2) (a) 1. must be interpreted as requiring notification when an authority proposes to release records in its possession that are the result of an investigation by an employer into a disciplinary or other employment matter involving an employee, but not when there has been an investigation of possible employment−related violation by the employee and the investigation is conducted by some entity other than the employee's employer. OAG 1−06.

Electronic reproduction of 2009−10 Wis. Stats. database, current through 2011 Wis. Act 39 and July 25, 2011.

Sub. (2) (a) 2. is unambiguous. If an authority has obtained a record through a subpoena or a search warrant, it must provide the requisite notice before releasing the records. The duty to notify, however, does not require notice to every record subject who happens to be named in the subpoena or search warrant records. Under sub. (2) (a), DCI must serve written notice of the decision to release the record to any record subject to whom the record pertains. OAG 1−06.

To the extent any requested records proposed to be released are records prepared by a private employer and those records contain information pertaining to one of the private employer's employees, sub. (2) (a) 3. does not allow release of the information without obtaining authorization from the individual employee. OAG 1−06.

19.36 Limitations upon access and withholding. **(1)** APPLICATION OF OTHER LAWS. Any record which is specifically exempted from disclosure by state or federal law or authorized to be exempted from disclosure by state law is exempt from disclosure under s. 19.35 (1), except that any portion of that record which contains public information is open to public inspection as provided in sub. (6).

(2) LAW ENFORCEMENT RECORDS. Except as otherwise provided by law, whenever federal law or regulations require or as a condition to receipt of aids by this state require that any record relating to investigative information obtained for law enforcement purposes be withheld from public access, then that information is exempt from disclosure under s. 19.35 (1).

(3) CONTRACTORS' RECORDS. Subject to sub. (12), each authority shall make available for inspection and copying under s. 19.35 (1) any record produced or collected under a contract entered into by the authority with a person other than an authority to the same extent as if the record were maintained by the authority. This subsection does not apply to the inspection or copying of a record under s. 19.35 (1) (am).

(4) COMPUTER PROGRAMS AND DATA. A computer program, as defined in s. 16.971 (4) (c), is not subject to examination or copying under s. 19.35 (1), but the material used as input for a computer program or the material produced as a product of the computer program is subject to the right of examination and copying, except as otherwise provided in s. 19.35 or this section.

(5) TRADE SECRETS. An authority may withhold access to any record or portion of a record containing information qualifying as a trade secret as defined in s. 134.90 (1) (c).

(6) SEPARATION OF INFORMATION. If a record contains information that is subject to disclosure under s. 19.35 (1) (a) or (am) and information that is not subject to such disclosure, the authority having custody of the record shall provide the information that is subject to disclosure and delete the information that is not subject to disclosure from the record before release.

(7) IDENTITIES OF APPLICANTS FOR PUBLIC POSITIONS. (a) In this section, "final candidate" means each applicant for a position who is seriously considered for appointment or whose name is certified for appointment and whose name is submitted for final consideration to an authority for appointment to any state position, except a position in the classified service, or to any local public office. "Final candidate" includes, whenever there are at least 5 candidates for an office or position, each of the 5 candidates who are considered most qualified for the office or position by an authority, and whenever there are less than 5 candidates for an office or position, each such candidate. Whenever an appointment is to be made from a group of more than 5 candidates, "final candidate" also includes each candidate in the group.

(b) Every applicant for a position with any authority may indicate in writing to the authority that the applicant does not wish the authority to reveal his or her identity. Except with respect to an applicant whose name is certified for appointment to a position in the state classified service or a final candidate, if an applicant makes such an indication in writing, the authority shall not provide access to any record related to the application that may reveal the identity of the applicant.

(8) IDENTITIES OF LAW ENFORCEMENT INFORMANTS. (a) In this subsection:

1. "Informant" means an individual who requests confidentiality from a law enforcement agency in conjunction with providing information to that agency or, pursuant to an express promise of confidentiality by a law enforcement agency or under circumstances in which a promise of confidentiality would reasonably be implied, provides information to a law enforcement agency or, is working with a law enforcement agency to obtain information, related in any case to any of the following:

a. Another person who the individual or the law enforcement agency suspects has violated, is violating or will violate a federal law, a law of any state or an ordinance of any local government.

b. Past, present or future activities that the individual or law enforcement agency believes may violate a federal law, a law of any state or an ordinance of any local government.

2. "Law enforcement agency" has the meaning given in s. 165.83 (1) (b), and includes the department of corrections.

(b) If an authority that is a law enforcement agency receives a request to inspect or copy a record or portion of a record under s. 19.35 (1) (a) that contains specific information including but not limited to a name, address, telephone number, voice recording or handwriting sample which, if disclosed, would identify an informant, the authority shall delete the portion of the record in which the information is contained or, if no portion of the record can be inspected or copied without identifying the informant, shall withhold the record unless the legal custodian of the record, designated under s. 19.33, makes a determination, at the time that the request is made, that the public interest in allowing a person to inspect, copy or receive a copy of such identifying information outweighs the harm done to the public interest by providing such access.

(9) RECORDS OF PLANS OR SPECIFICATIONS FOR STATE BUILDINGS. Records containing plans or specifications for any state−owned or state−leased building, structure or facility or any proposed state−owned or state−leased building, structure or facility are not subject to the right of inspection or copying under s. 19.35 (1) except as the department of administration otherwise provides by rule.

(10) EMPLOYEE PERSONNEL RECORDS. Unless access is specifically authorized or required by statute, an authority shall not provide access under s. 19.35 (1) to records containing the following information, except to an employee or the employee's representative to the extent required under s. 103.13 or to a recognized or certified collective bargaining representative to the extent required to fulfill a duty to bargain under ch. 111 or pursuant to a collective bargaining agreement under ch. 111:

(a) Information maintained, prepared, or provided by an employer concerning the home address, home electronic mail address, home telephone number, or social security number of an employee, unless the employee authorizes the authority to provide access to such information.

(b) Information relating to the current investigation of a possible criminal offense or possible misconduct connected with employment by an employee prior to disposition of the investigation.

(c) Information pertaining to an employee's employment examination, except an examination score if access to that score is not otherwise prohibited.

(d) Information relating to one or more specific employees that is used by an authority or by the employer of the employees for staff management planning, including performance evaluations, judgments, or recommendations concerning future salary adjustments or other wage treatments, management bonus plans, promotions, job assignments, letters of reference, or other comments or ratings relating to employees.

(11) RECORDS OF AN INDIVIDUAL HOLDING A LOCAL PUBLIC OFFICE OR A STATE PUBLIC OFFICE. Unless access is specifically authorized or required by statute, an authority shall not provide access under s. 19.35 (1) to records, except to an individual to the extent required under s. 103.13, containing information maintained, prepared, or provided by an employer concerning the home address, home electronic mail address, home telephone number, or social security number of an individual who holds a local public office or a state public office, unless the individual

Electronic reproduction of 2009−10 Wis. Stats. database, current through 2011 Wis. Act 39 and July 25, 2011.

authorizes the authority to provide access to such information. This subsection does not apply to the home address of an individual who holds an elective public office or to the home address of an individual who, as a condition of employment, is required to reside in a specified location.

(12) INFORMATION RELATING TO CERTAIN EMPLOYEES. Unless access is specifically authorized or required by statute, an authority shall not provide access to a record prepared or provided by an employer performing work on a project to which s. 66.0903, 103.49, or 103.50 applies, or on which the employer is otherwise required to pay prevailing wages, if that record contains the name or other personally identifiable information relating to an employee of that employer, unless the employee authorizes the authority to provide access to that information. In this subsection, "personally identifiable information" does not include an employee's work classification, hours of work, or wage or benefit payments received for work on such a project.

(13) FINANCIAL IDENTIFYING INFORMATION. An authority shall not provide access to personally identifiable data that contains an individual's account or customer number with a financial institution, as defined in s. 134.97 (1) (b), including credit card numbers, debit card numbers, checking account numbers, or draft account numbers, unless specifically required by law.

History: 1981 c. 335; 1985 a. 236; 1991 a. 39, 269, 317; 1993 a. 93; 1995 a. 27; 2001 a. 16; 2003 a. 33, 47; 2005 a. 59, 253; 2007 a. 97; 2009 a. 28; 2011 a. 32.

NOTE: 2003 Wis. Act 47, which affects this section, contains extensive explanatory notes.

Sub. (2) does not require providing access to payroll records of subcontractors of a prime contractor of a public construction project. Building and Construction Trades Council v. Waunakee Community School District, 221 Wis. 2d 575, 585 N.W.2d 726 (Ct. App. 1999), 97−3282.

Production of an analog audio tape was insufficient under sub. (4) when the requester asked for examination and copying of the original digital audio tape. State ex rel. Milwaukee Police Association v. Jones, 2000 WI App 146, 237 Wis. 2d 840, 615 N.W.2d 190, 98−3629.

Requests for university admissions records focusing on test scores, class rank, grade point average, race, gender, ethnicity, and socio−economic background was not a request for personally identifiable information and release was not barred by federal law or public policy. That the requests would require the university to redact information from thousands of documents under s. 19.36 (6) did not essentially require the university to create new records and, as such, did not provide grounds for denying the request under under s. 19.35 (1) (L). Osborn v. Board of Regents of the University of Wisconsin System, 2002 WI 83, 254 Wis. 2d 266, 647 N.W.2d 158, 00−2861.

"Investigation" in sub. (10) (b) includes only that conducted by the public authority itself as a prelude to possible employee disciplinary action. An investigation achieves its "disposition" when the authority acts to impose discipline on an employee as a result of the investigation, regardless of whether the employee elects to pursue grievance arbitration or another review mechanism that may be available. Local 2489 v. Rock County, 2004 WI App 210, 277 Wis. 2d 208, 689 N.W.2d 644, 03−3101. See also, Zellner v. Cedarburg School District, 2007 WI 53, 300 Wis. 2d 290, 731 N.W.2d 240, 06−1143.

Municipalities may not avoid liability under the open records law by contracting with independent contractor assessors for the collection, maintenance, and custody of property assessment records, and then directing any requester of those records to the independent contractor assessors. WIREdata, Inc. v. Village of Sussex, 2008 WI 69, 310 Wis. 2d 397, 751 N.W.2d 736, 05−1473.

When requests to municipalities were for electronic/digital copies of assessment records, "PDF" files were "electronic/digital" files despite the fact that the files did not have all the characteristics that the requester wished. It is not required that requesters must be given access to an authority's electronic databases to examine them, extract information from them, or copy them. Allowing requesters such direct access to the electronic databases of an authority would pose substantial risks. WIREdata, Inc. v. Village of Sussex, 2008 WI 69, 310 Wis. 2d 397, 751 N.W.2d 736, 05−1473.

Separation costs must be borne by the agency. 72 Atty. Gen. 99.

A computerized compilation of bibliographic records is discussed in relation to copyright law; a requester is entitled to a copy of a computer tape or a printout of information on the tape. 75 Atty. Gen. 133 (1986).

An exemption to the federal Freedom of Information Act was not incorporated under sub. (1). 77 Atty. Gen. 20.

Sub. (7) is an exception to the public records law and should be narrowly construed. In sub. (7) "applicant" and "candidate" are synonymous. "Final candidates" are the five most qualified unless there are less than five applicants, in which case all are final candidates. 81 Atty. Gen. 37.

Public access to law enforcement records. Fitzgerald. 68 MLR 705 (1985).

19.365 Rights of data subject to challenge; authority corrections. (1) Except as provided under sub. (2), an individual or person authorized by the individual may challenge the accuracy of a record containing personally identifiable information pertaining to the individual that is maintained by an authority if the individual is authorized to inspect the record under s. 19.35 (1) (a) or (am) and the individual notifies the authority, in writing, of the challenge. After receiving the notice, the authority shall do one of the following:

(a) Concur with the challenge and correct the information.

(b) Deny the challenge, notify the individual or person authorized by the individual of the denial and allow the individual or person authorized by the individual to file a concise statement setting forth the reasons for the individual's disagreement with the disputed portion of the record. A state authority that denies a challenge shall also notify the individual or person authorized by the individual of the reasons for the denial.

(2) This section does not apply to any of the following records:

(a) Any record transferred to an archival depository under s. 16.61 (13).

(b) Any record pertaining to an individual if a specific state statute or federal law governs challenges to the accuracy of the record.

History: 1991 a. 269 ss. 27d, 27e, 35am, 37am, 39am.

19.37 Enforcement and penalties. (1) MANDAMUS. If an authority withholds a record or a part of a record or delays granting access to a record or part of a record after a written request for disclosure is made, the requester may pursue either, or both, of the alternatives under pars. (a) and (b).

(a) The requester may bring an action for mandamus asking a court to order release of the record. The court may permit the parties or their attorneys to have access to the requested record under restrictions or protective orders as the court deems appropriate.

(b) The requester may, in writing, request the district attorney of the county where the record is found, or request the attorney general, to bring an action for mandamus asking a court to order release of the record to the requester. The district attorney or attorney general may bring such an action.

(1m) TIME FOR COMMENCING ACTION. No action for mandamus under sub. (1) to challenge the denial of a request for access to a record or part of a record may be commenced by any committed or incarcerated person later than 90 days after the date that the request is denied by the authority having custody of the record or part of the record.

(1n) NOTICE OF CLAIM. Sections 893.80 and 893.82 do not apply to actions commenced under this section.

(2) COSTS, FEES AND DAMAGES. (a) Except as provided in this paragraph, the court shall award reasonable attorney fees, damages of not less than $100, and other actual costs to the requester if the requester prevails in whole or in substantial part in any action filed under sub. (1) relating to access to a record or part of a record under s. 19.35 (1) (a). If the requester is a committed or incarcerated person, the requester is not entitled to any minimum amount of damages, but the court may award damages. Costs and fees shall be paid by the authority affected or the unit of government of which it is a part, or by the unit of government by which the legal custodian under s. 19.33 is employed and may not become a personal liability of any public official.

(b) In any action filed under sub. (1) relating to access to a record or part of a record under s. 19.35 (1) (am), if the court finds that the authority acted in a willful or intentional manner, the court shall award the individual actual damages sustained by the individual as a consequence of the failure.

(3) PUNITIVE DAMAGES. If a court finds that an authority or legal custodian under s. 19.33 has arbitrarily and capriciously denied or delayed response to a request or charged excessive fees, the court may award punitive damages to the requester.

(4) PENALTY. Any authority which or legal custodian under s. 19.33 who arbitrarily and capriciously denies or delays response to a request or charges excessive fees may be required to forfeit not more than $1,000. Forfeitures under this section shall be enforced by action on behalf of the state by the attorney general or by the district attorney of any county where a violation occurs. In actions brought by the attorney general, the court shall award

Electronic reproduction of 2009−10 Wis. Stats. database, current through 2011 Wis. Act 39 and July 25, 2011.

any forfeiture recovered together with reasonable costs to the state; and in actions brought by the district attorney, the court shall award any forfeiture recovered together with reasonable costs to the county.

History: 1981 c. 335, 391; 1991 a. 269 s. 43d; 1995 a. 158; 1997 a. 94.

A party seeking fees under sub. (2) must show that the prosecution of an action could reasonably be regarded as necessary to obtain the information and that a "causal nexus" exists between that action and the agency's surrender of the information. State ex rel. Vaughan v. Faust, 143 Wis. 2d 868, 422 N.W.2d 898 (Ct. App. 1988).

If an agency exercises due diligence but is unable to respond timely to a records request, the plaintiff must show that a mandamus action was necessary to secure the records release to qualify for award of fees and costs under sub. (2). Racine Education Association. v. Racine Board of Education, 145 Wis. 2d 518, 427 N.W.2d 414 (Ct. App. 1988).

Assuming sub. (1) (a) applies before mandamus is issued, the trial court retains discretion to refuse counsel's participation in an *in camera* inspection. Milwaukee Journal v. Call, 153 Wis. 2d 313, 450 N.W.2d 515 (Ct. App. 1989).

If the trial court has an incomplete knowledge of the contents of the public records sought, it must conduct an *in camera* inspection to determine what may be disclosed following a custodian's refusal. State ex rel. Morke v. Donnelly, 155 Wis. 2d 521, 455 N.W.2d 893 (1990).

A *pro se* litigant is not entitled to attorney fees. State ex rel. Young v. Shaw, 165 Wis. 2d 276, 477 N.W.2d 340 (Ct. App. 1991).

A favorable judgment or order is not a necessary condition precedent for finding that a party prevailed against an agency under sub. (2). A causal nexus must be shown between the prosecution of the mandamus action and the release of the requested information. Eau Claire Press Co. v. Gordon, 176 Wis. 2d 154, 499 N.W.2d 918 (Ct. App. 1993).

Actions brought under the open meetings and open records laws are exempt from the notice provisions of s. 893.80 (1). Auchinleck v. Town of LaGrange, 200 Wis. 2d 585, 547 N.W.2d 587 (1996), 94−2809.

An inmate's right to mandamus under this section is subject to s. 801.02 (7), which requires exhaustion of administrative remedies before an action may be commenced. Moore v. Stahowiak, 212 Wis. 2d 744, 569 N.W.2d 711 (Ct. App. 1997), 96−2547.

When requests are complex, municipalities should be afforded reasonable latitude in time for their responses. An authority should not be subjected to the burden and expense of a premature public records lawsuit while it is attempting in good faith to respond, or to determine how to respond, to a request. What constitutes a reasonable time for a response by an authority depends on the nature of the request, the staff and other resources available to the authority to process the request, the extent of the request, and other related considerations. WIREdata, Inc. v. Village of Sussex, 2008 WI 69, 310 Wis. 2d 397, 751 N.W.2d 736, 05−1473.

The legislature did not intend to allow a record requester to control or appeal a mandamus action brought by the attorney general under sub. (1) (b). Sub. (1) outlines two distinct courses of action when a records request is denied, dictates distinct courses of action, and prescribes different remedies for each course. Nothing suggests that a requester is hiring the attorney general as a sort of private counsel to proceed with the case, or that the requester would be a named plaintiff in the case with the attorney general appearing as counsel of record when proceeding under sub. (1) (b). State v. Zien, 2008 WI App 153, 314 Wis. 2d 340, 761 N.W.2d 15, 07−1930.

Actual damages are the liability of the agency. Punitive damages and forfeitures can be the liability of either the agency or the legal custodian, or both. Section 895.46 (1) (a) probably provides indemnification for punitive damages assessed against a custodian, but not for forfeitures. 72 Atty. Gen. 99.

19.39 Interpretation by attorney general. Any person may request advice from the attorney general as to the applicability of this subchapter under any circumstances. The attorney general may respond to such a request.

History: 1981 c. 335.

SUBCHAPTER III

CODE OF ETHICS FOR PUBLIC OFFICIALS AND EMPLOYEES

19.41 Declaration of policy. (1) It is declared that high moral and ethical standards among state public officials and state employees are essential to the conduct of free government; that the legislature believes that a code of ethics for the guidance of state public officials and state employees will help them avoid conflicts between their personal interests and their public responsibilities, will improve standards of public service and will promote and strengthen the faith and confidence of the people of this state in their state public officials and state employees.

(2) It is the intent of the legislature that in its operations the board shall protect to the fullest extent possible the rights of individuals affected.

History: 1973 c. 90; Stats. 1973 s. 11.01; 1973 c. 334 s. 33; Stats. 1973 s. 19.41; 1977 c. 277.

19.42 Definitions. In this subchapter:

(1) "Anything of value" means any money or property, favor, service, payment, advance, forbearance, loan, or promise of future employment, but does not include compensation and expenses paid by the state, fees and expenses which are permitted and reported under s. 19.56, political contributions which are reported under ch. 11, or hospitality extended for a purpose unrelated to state business by a person other than an organization.

(2) "Associated", when used with reference to an organization, includes any organization in which an individual or a member of his or her immediate family is a director, officer or trustee, or owns or controls, directly or indirectly, and severally or in the aggregate, at least 10% of the outstanding equity or of which an individual or a member of his or her immediate family is an authorized representative or agent.

(3) "Board" means the government accountability board.

(3m) "Candidate," except as otherwise provided, has the meaning given in s. 11.01 (1).

(3s) "Candidate for local public office" means any individual who files nomination papers and a declaration of candidacy under s. 8.21 or who is nominated at a caucus under s. 8.05 (1) for the purpose of appearing on the ballot for election as a local public official or any individual who is nominated for the purpose of appearing on the ballot for election as a local public official through the write−in process or by appointment to fill a vacancy in nomination and who files a declaration of candidacy under s. 8.21.

(4) "Candidate for state public office" means any individual who files nomination papers and a declaration of candidacy under s. 8.21 or who is nominated at a caucus under s. 8.05 (1) for the purpose of appearing on the ballot for election as a state public official or any individual who is nominated for the purpose of appearing on the ballot for election as a state public official through the write−in process or by appointment to fill a vacancy in nomination and who files a declaration of candidacy under s. 8.21.

(4g) "Clearly identified," when used in reference to a communication containing a reference to a person, means one of the following:

(a) The person's name appears.

(b) A photograph or drawing of the person appears.

(c) The identity of the person is apparent by unambiguous reference.

(4r) "Communication" means a message transmitted by means of a printed advertisement, billboard, handbill, sample ballot, radio or television advertisement, telephone call, or any medium that may be utilized for the purpose of disseminating or broadcasting a message, but not including a poll conducted solely for the purpose of identifying or collecting data concerning the attitudes or preferences of electors.

(5) "Department" means the legislature, the University of Wisconsin System, any authority or public corporation created and regulated by an act of the legislature and any office, department, independent agency or legislative service agency created under ch. 13, 14 or 15, any technical college district or any constitutional office other than a judicial office. In the case of a district attorney, "department" means the department of administration unless the context otherwise requires.

(5m) "Elective office" means an office regularly filled by vote of the people.

(6) "Gift" means the payment or receipt of anything of value without valuable consideration.

(7) "Immediate family" means:

(a) An individual's spouse; and

(b) An individual's relative by marriage, lineal descent or adoption who receives, directly or indirectly, more than one−half of his or her support from the individual or from whom the individual receives, directly or indirectly, more than one−half of his or her support.

Electronic reproduction of 2009−10 Wis. Stats. database, current through 2011 Wis. Act 39 and July 25, 2011.

(7m) "Income" has the meaning given under section 61 of the internal revenue code.

(7s) "Internal revenue code" has the meanings given under s. 71.01 (6).

(7u) "Local governmental unit" means a political subdivision of this state, a special purpose district in this state, an instrumentality or corporation of such a political subdivision or special purpose district, a combination or subunit of any of the foregoing or an instrumentality of the state and any of the foregoing.

(7w) "Local public office" means any of the following offices, except an office specified in sub. (13):

(a) An elective office of a local governmental unit.

(b) A county administrator or administrative coordinator or a city or village manager.

(c) An appointive office or position of a local governmental unit in which an individual serves for a specified term, except a position limited to the exercise of ministerial action or a position filled by an independent contractor.

(cm) The position of member of the board of directors of a local exposition district under subch. II of ch. 229 not serving for a specified term.

(d) An appointive office or position of a local government which is filled by the governing body of the local government or the executive or administrative head of the local government and in which the incumbent serves at the pleasure of the appointing authority, except a clerical position, a position limited to the exercise of ministerial action or a position filled by an independent contractor.

(7x) "Local public official" means an individual holding a local public office.

(8) "Ministerial action" means an action that an individual performs in a given state of facts in a prescribed manner in obedience to the mandate of legal authority, without regard to the exercise of the individual's own judgment as to the propriety of the action being taken.

(9) "Nominee" means any individual who is nominated by the governor for appointment to a state public office and whose nomination requires the advice and consent of the senate.

(10) "Official required to file" means:

(b) A member of a technical college district board or district director of a technical college, or any individual occupying the position of assistant, associate or deputy district director of a technical college.

(c) A state public official identified under s. 20.923 except an official holding a state public office identified under s. 20.923 (6) (h).

(d) A state public official whose appointment to state public office requires the advice and consent of the senate, except a member of the board of directors of the Bradley Center Sports and Entertainment Corporation created under ch. 232.

(e) An individual appointed by the governor or the state superintendent of public instruction pursuant to s. 17.20 (2) other than a trustee of any private higher educational institution receiving state appropriations.

(f) An auditor for the legislative audit bureau.

(g) The chief clerk and sergeant at arms of each house of the legislature.

(h) The members and employees of the Wisconsin Housing and Economic Development Authority, except clerical employees.

(i) A municipal judge.

(j) A member or the executive director of the judicial commission.

(k) A division administrator of an office created under ch. 14 or a department or independent agency created or continued under ch. 15.

(L) The executive director, executive assistant to the executive director, internal auditor, chief investment officer, chief financial officer, chief legal counsel, chief risk officer and investment directors of the investment board.

(m) The executive director, members and employees of the World Dairy Center Authority, except clerical employees.

(n) The chief executive officer and members of the board of directors of the University of Wisconsin Hospitals and Clinics Authority.

(o) The chief executive officer and members of the board of directors of the Fox River Navigational System Authority.

(q) The executive director and members of the board of directors of the Wisconsin Aerospace Authority.

(r) The employees and members of the board of directors of the Lower Fox River Remediation Authority.

(sm) The members of the board of directors of the Wisconsin Economic Development Corporation employed in the private sector who are appointed by the speaker of the assembly and the senate majority leader.

(11) "Organization" means any corporation, partnership, proprietorship, firm, enterprise, franchise, association, trust or other legal entity other than an individual or body politic.

(11m) "Political party" means a political organization under whose name individuals who seek elective public office appear on the ballot at any election or any national, state, or local unit or affiliate of that organization.

(12) "Security" has the meaning given under s. 551.102 (28), except that the term does not include a certificate of deposit or a deposit in a savings and loan association, savings bank, credit union or similar association organized under the laws of any state.

(13) "State public office" means:

(a) All positions to which individuals are regularly appointed by the governor, except the position of trustee of any private higher educational institution receiving state appropriations and the position of member of the district board of a local professional baseball park district created under subch. III of ch. 229 and the position of member of the district board of a local cultural arts district created under subch. V of ch. 229.

(b) The positions of associate and assistant vice presidents of the University of Wisconsin System and vice chancellors identified in s. 20.923 (5).

NOTE: Par. (b) is amended eff. 7−1−13 by 2011 Wis. Act 32 to read:

(b) The positions of associate and assistant vice presidents of the University of Wisconsin System.

(c) All positions identified under s. 20.923 (2), (4), (4g), (6) (f) to (h), (7), and (8) to (10), except clerical positions.

NOTE: Par. (c) is amended eff. 7−1−13 by 2011 Wis. Act 32 to read:

(c) All positions identified under s. 20.923 (2), (4), (6) (f) to (h), (7), and (8) to (10), except clerical positions.

(cm) The president and vice presidents of the University of Wisconsin System and the chancellors and vice chancellors of all University of Wisconsin institutions, the University of Wisconsin Colleges, and the University of Wisconsin−Extension.

NOTE: Par. (cm) is created eff. 7−1−13 by 2011 Wis. Act 32.

(e) The chief clerk and sergeant at arms of each house of the legislature or a full−time, permanent employee occupying the position of auditor for the legislative audit bureau.

(f) A member of a technical college district board or district director of a technical college, or any position designated as assistant, associate or deputy district director of a technical college.

(g) The members and employees of the Wisconsin Housing and Economic Development Authority, except clerical employees.

(h) A municipal judge.

(i) A member or the executive director of the judicial commission.

Electronic reproduction of 2009−10 Wis. Stats. database, current through 2011 Wis. Act 39 and July 25, 2011.

(j) A division administrator of an office created under ch. 14 or a department or independent agency created or continued under ch. 15.

(k) The executive director, executive assistant to the executive director, internal auditor, chief investment officer, chief financial officer, chief legal counsel, chief risk officer and investment directors of the investment board.

(L) The members and employees of the World Dairy Center Authority.

(m) The chief executive officer and members of the board of directors of the University of Wisconsin Hospitals and Clinics Authority.

(n) The chief executive officer and members of the board of directors of the Fox River Navigational System Authority.

(om) The members of the board of directors of the Wisconsin Economic Development Corporation employed in the private sector who are appointed by the speaker of the assembly and the senate majority leader.

(14) "State public official" means any individual holding a state public office.

History: 1973 c. 90; Stats. 1973 s. 11.02; 1973 c. 333; 1973 c. 334 ss. 33, 57; Stats. 1973 s. 19.42; 1977 c. 29, 223, 277; 1977 c. 447 ss. 35, 209; 1979 c. 34, 177, 221; 1981 c. 20, 269, 349, 391; 1983 a. 27; 1983 a. 81 s. 11; 1983 a. 83 s. 20; 1983 a. 166 ss. 1 to 4, 16; 1983 a. 484, 538; 1985 a. 26; 1985 a. 29 s. 3202 (46); 1985 a. 304; 1987 a. 72, 119; 1987 a. 312 s. 17; 1987 a. 340, 365, 399, 403; 1989 a. 31, 338; 1991 a. 39, 189, 221, 269; 1993 a. 16, 263, 399; 1995 a. 27, 56, 274; 1997 a. 27; 1997 a. 237 ss. 19m, 722q; 1997 a. 298; 1999 a. 42, 65; 2001 a. 16, 104, 109; 2003 a. 39; 2005 a. 335; 2007 a. 1, 20, 196; 2009 a. 28; 2011 a. 7, 10, 32.

Cross−reference: See also s. GAB 16.02, Wis. adm. code.

Law Revision Committee Note, 1983: This bill establishes consistency in the usage of the terms "person", "individual" and "organization" in the code of ethics for state public officials. The term "person" is the broadest of these terms, and refers to any legal entity. The use of the term "person" in the bill is consistent with the definition of the word in s. 990.01 (26), stats., which provides that "person" includes all partnerships, associations and bodies politic or corporate". The term "organization" is narrower, and is defined in s. 19.42 (11), stats., as "any corporation, partnership, proprietorship, firm, enterprise, franchise, association, trust or other legal entity other than an individual or body politic". "Individual", although not specifically defined in the current statutes or in this bill, is used consistently in this bill to refer to natural persons.

The term "income" is used several times in the code of ethics for state public officials. This bill clarifies the current definition of income by providing a specific cross−reference to the internal revenue code and by providing that the definition refers to the most recent version of the internal revenue code which has been adopted by the legislature for state income tax purposes.

When person holds 2 government positions, one included in and the other exempted from the definition of state public official, the applicability of subch. III depends upon the capacity in which the person acted. 64 Atty. Gen. 143.

19.43 Financial disclosure. (1) Each individual who in January of any year is an official required to file shall file with the board no later than April 30 of that year a statement of economic interests meeting each of the requirements of s. 19.44 (1). The information contained on the statement shall be current as of December 31 of the preceding year.

(2) An official required to file shall file with the board a statement of economic interests meeting each of the requirements of s. 19.44 (1) no later than 21 days following the date he or she assumes office if the official has not previously filed a statement of economic interests with the board during that year. The information on the statement shall be current as per the date he or she assumes office.

(3) A nominee shall file with the board a statement of economic interests meeting each of the requirements of s. 19.44 (1) within 21 days of being nominated unless the nominee has previously filed a statement of economic interests with the board during that year. The information on the statement shall be current as per the date he or she was nominated. Following the receipt of a nominee's statement of economic interests, the board shall forward copies of such statement to the members of the committee of the senate to which the nomination is referred.

(4) A candidate for state public office shall file with the board a statement of economic interests meeting each of the requirements of s. 19.44 (1) no later than 4:30 p.m. on the 3rd day following the last day for filing nomination papers for the office which the candidate seeks, or no later than 4:30 p.m. on the next business day after the last day whenever that candidate is granted an extension of time for filing nomination papers or a declaration of candidacy under s. 8.05 (1) (j), 8.10 (2) (a), 8.15 (1), or 8.20 (8) (a), no later than 4:30 p.m. on the 5th day after notification of nomination is mailed or personally delivered to the candidate by the municipal clerk in the case of a candidate who is nominated at a caucus, or no later than 4:30 p.m. on the 3rd day after notification of nomination is mailed or personally delivered to the candidate by the appropriate official or agency in the case of a write−in candidate or candidate who is appointed to fill a vacancy in nomination under s. 8.35 (2) (a). The information contained on the statement shall be current as of December 31 of the year preceding the filing deadline. Before certifying the name of any candidate for state public office under s. 7.08 (2) (a), the government accountability board, municipal clerk, or board of election commissioners shall ascertain whether that candidate has complied with this subsection. If not, the government accountability board, municipal clerk, or board of election commissioners may not certify the candidate's name for ballot placement.

(5) Each member of the investment board and each employee of the investment board who is a state public official shall complete and file with the government accountability board a quarterly report of economic transactions no later than the last day of the month following the end of each calendar quarter during any portion of which he or she was a member or employee of the investment board. Such reports of economic transactions shall be in the form prescribed by the government accountability board and shall identify the date and nature of any purchase, sale, put, call, option, lease, or creation, dissolution, or modification of any economic interest made during the quarter for which the report is filed and disclosure of which would be required by s. 19.44 if a statement of economic interests were being filed.

(7) If an official required to file fails to make a timely filing, the board shall promptly provide notice of the delinquency to the secretary of administration, and to the chief executive of the department of which the official's office or position is a part, or, in the case of a district attorney, to the chief executive of that department and to the county clerk of each county served by the district attorney or in the case of a municipal judge to the clerk of the municipality of which the official's office is a part, or in the case of a justice, court of appeals judge, or circuit judge, to the director of state courts. Upon such notification both the secretary of administration and the department, municipality, or director shall withhold all payments for compensation, reimbursement of expenses, and other obligations to the official until the board notifies the officers to whom notice of the delinquency was provided that the official has complied with this section.

(8) On its own motion or at the request of any individual who is required to file a statement of economic interests, the board may extend the time for filing or waive any filing requirement if the board determines that the literal application of the filing requirements of this subchapter would work an unreasonable hardship on that individual or that the extension of the time for filing or waiver is in the public interest. The board shall set forth in writing as a matter of public record its reason for the extension or waiver.

History: 1973 c. 90; Stats. 1973 s. 11.03; 1973 c. 333; 1973 c. 334 s. 33; Stats. 1973 s. 19.43; 1977 c. 223, 277; 1979 c. 221; 1983 a. 166 ss. 5, 16; 1983 a. 484, 538; 1985 a. 29, 304; 1987 a. 399; 1989 a. 31; 1993 a. 266; 2003 a. 33; 2007 a. 1.

Cross−reference: See also chs. GAB 15 and 25, Wis. adm. code.

The extent of confidentiality of investment board nominees' statements of economic interests rests in the sound discretion of the senate committee to which the nomination is referred under sub. (3). 68 Atty. Gen. 378.

The possible conflict between requirements of financial disclosure and confidentiality requirements for lawyers is discussed. 68 Atty. Gen. 411.

Sub. (8) does not authorize the ethics board to extend the date by which a candidate must file a statement of economic interest and cannot waive the filing requirement. 81 Atty. Gen. 85.

19.44 Form of statement. (1) Every statement of economic interests which is required to be filed under this subchapter shall be in the form prescribed by the board, and shall contain the following information:

Electronic reproduction of 2009−10 Wis. Stats. database, current through 2011 Wis. Act 39 and July 25, 2011.

(a) The identity of every organization with which the individual required to file is associated and the nature of his or her association with the organization, except that no identification need be made of:

1. Any organization which is described in section 170 (c) of the internal revenue code.

2. Any organization which is organized and operated primarily to influence voting at an election including support for or opposition to an individual's present or future candidacy or to a present or future referendum.

3. Any nonprofit organization which is formed exclusively for social purposes and any nonprofit community service organization.

4. A trust.

(b) The identity of every organization or body politic in which the individual who is required to file or that individual's immediate family, severally or in the aggregate, owns, directly or indirectly, securities having a value of $5,000 or more, the identity of such securities and their approximate value, except that no identification need be made of a security or issuer of a security when it is issued by any organization not doing business in this state or by any government or instrumentality or agency thereof, or an authority or public corporation created and regulated by an act of such government, other than the state of Wisconsin, its instrumentalities, agencies and political subdivisions, or authorities or public corporations created and regulated by an act of the legislature.

(c) The name of any creditor to whom the individual who is required to file or such individual's immediate family, severally or in the aggregate, owes $5,000 or more and the approximate amount owed.

(d) The real property located in this state in which the individual who is required to file or such individual's immediate family holds an interest, other than the principal residence of the individual or his or her immediate family, and the nature of the interest held. An individual's interest in real property does not include a proportional share of interests in real property if the individual's proportional share is less than 10% of the outstanding shares or is less than an equity value of $5,000.

(e) The identity of each payer from which the individual who is required to file or a member of his or her immediate family received $1,000 or more of his or her income for the preceding taxable year, except that if the individual who is required to file identifies the general nature of the business in which he or she or his or her immediate family is engaged, then no identification need be made of a decedent's estate or an individual, not acting as a representative of an organization, unless the individual is a lobbyist as defined in s. 13.62. In addition, no identification need be made of payers from which only dividends or interest, anything of pecuniary value reported under s. 19.56 or reportable under s. 19.57, or political contributions reported under ch. 11 were received.

(f) If the individual who is required to file or a member of his or her immediate family received $10,000 or more of his or her income for the preceding taxable year from a partnership, limited liability company, corporation electing to be taxed as a partnership under subchapter S of the internal revenue code or service corporation under ss. 180.1901 to 180.1921 in which the individual or a member of his or her immediate family, severally or in the aggregate, has a 10% or greater interest, the identity of each payer from which the organization received $10,000 or more of its income for its preceding taxable year, except that if the individual who is required to file identifies the general nature of the business in which he or she or his or her immediate family is engaged then no identification need be made of a decedent's estate or an individual, not acting as a representative of an organization, unless the individual is a lobbyist as defined in s. 13.62. In addition, no identification need be made of payers from which dividends or interest are received.

(g) The identity of each person from which the individual who is required to file received, directly or indirectly, any gift or gifts having an aggregate value of more than $50 within the taxable year preceding the time of filing, except that the source of a gift need not be identified if the donation is permitted under s. 19.56 (3) (e), (em) or (f) or if the donor is the donee's parent, grandparent, child, grandchild, brother, sister, parent−in−law, grandparent−in−law, brother−in−law, sister−in−law, uncle, aunt, niece, nephew, spouse, fiance or fiancee.

(h) Lodging, transportation, money or other things of pecuniary value reportable under s. 19.56 (2).

(2) Whenever a dollar amount is required to be reported pursuant to this section, it is sufficient to report whether the amount is not more than $50,000, or more than $50,000.

(3) (a) An individual is the owner of a trust and the trust's assets and obligations if he or she is the creator of the trust and has the power to revoke the trust without obtaining the consent of all of the beneficiaries of the trust.

(b) An individual who is eligible to receive income or other beneficial use of the principal of a trust is the owner of a proportional share of the principal in the proportion that the individual's beneficial interest in the trust bears to the total beneficial interests vested in all beneficiaries of the trust. A vested beneficial interest in a trust includes a vested reverter interest.

(4) Information which is required by this section shall be provided on the basis of the best knowledge, information and belief of the individual filing the statement.

History: 1973 c. 90; Stats. 1973 s. 11.04; 1973 c. 334 ss. 33, 57, 58; Stats. 1973 s. 19.44; 1977 c. 277; 1979 c. 110 s. 60 (4), (11); 1983 a. 61; 1983 a. 166 ss. 6, 16; 1983 a. 538; 1989 a. 303, 338; 1991 a. 39; 1993 a. 112, 490; 1995 a. 27; 2011 a. 32.

Cross−reference: See also chs. GAB 15 and 25, Wis. adm. code.

Law Revision Committee Note, 1983: Under the ethics code, each state public official and candidate for state public office must file a statement of economic interests with the ethics board listing the businesses, organizations and other legal entities from which they and their families received substantial income during the preceding taxable year. However, the ethics code does not require identification of individual persons from whom the income is received. This bill provides that if the individual filing the statement of economic interests identifies the general nature of the business in which the individual or a member of his or her family is engaged, then no identification need be made of the estate of any deceased individual from which income was received. This bill makes it unnecessary to identify a decedent's estate which was indebted to a state public official or candidate for state public office, and makes it unnecessary to identify decedents' estates which are represented by lawyer−public officials.

A beneficiary of a future interest in a trust must identify the securities held by the trust if the individual's interest in the securities is valued at $5,000 or more. 80 Atty. Gen. 183.

19.45 Standards of conduct; state public officials. **(1)** The legislature hereby reaffirms that a state public official holds his or her position as a public trust, and any effort to realize substantial personal gain through official conduct is a violation of that trust. This subchapter does not prevent any state public official from accepting other employment or following any pursuit which in no way interferes with the full and faithful discharge of his or her duties to this state. The legislature further recognizes that in a representative democracy, the representatives are drawn from society and, therefore, cannot and should not be without all personal and economic interest in the decisions and policies of government; that citizens who serve as state public officials retain their rights as citizens to interests of a personal or economic nature; that standards of ethical conduct for state public officials need to distinguish between those minor and inconsequential conflicts that are unavoidable in a free society, and those conflicts which are substantial and material; and that state public officials may need to engage in employment, professional or business activities, other than official duties, in order to support themselves or their families and to maintain a continuity of professional or business activity, or may need to maintain investments, which activities or investments do not conflict with the specific provisions of this subchapter.

(2) No state public official may use his or her public position or office to obtain financial gain or anything of substantial value

Electronic reproduction of 2009−10 Wis. Stats. database, current through 2011 Wis. Act 39 and July 25, 2011.

for the private benefit of himself or herself or his or her immediate family, or for an organization with which he or she is associated. This subsection does not prohibit a state public official from using the title or prestige of his or her office to obtain contributions permitted and reported as required by ch. 11.

(3) No person may offer or give to a state public official, directly or indirectly, and no state public official may solicit or accept from any person, directly or indirectly, anything of value if it could reasonably be expected to influence the state public official's vote, official actions or judgment, or could reasonably be considered as a reward for any official action or inaction on the part of the state public official. This subsection does not prohibit a state public official from engaging in outside employment.

(3m) No state public official may accept or retain any transportation, lodging, meals, food or beverage, or reimbursement therefor, except in accordance with s. 19.56 (3).

(4) No state public official may intentionally use or disclose information gained in the course of or by reason of his or her official position or activities in any way that could result in the receipt of anything of value for himself or herself, for his or her immediate family, or for any other person, if the information has not been communicated to the public or is not public information.

(5) No state public official may use or attempt to use the public position held by the public official to influence or gain unlawful benefits, advantages or privileges personally or for others.

(6) No state public official, member of a state public official's immediate family, nor any organization with which the state public official or a member of the official's immediate family owns or controls at least 10% of the outstanding equity, voting rights, or outstanding indebtedness may enter into any contract or lease involving a payment or payments of more than $3,000 within a 12−month period, in whole or in part derived from state funds, unless the state public official has first made written disclosure of the nature and extent of such relationship or interest to the board and to the department acting for the state in regard to such contract or lease. Any contract or lease entered into in violation of this subsection may be voided by the state in an action commenced within 3 years of the date on which the board, or the department or officer acting for the state in regard to the allocation of state funds from which such payment is derived, knew or should have known that a violation of this subsection had occurred. This subsection does not affect the application of s. 946.13.

(7) (a) No state public official who is identified in s. 20.923 may represent a person for compensation before a department or any employee thereof, except:

1. In a contested case which involves a party other than the state with interests adverse to those represented by the state public official; or

2. At an open hearing at which a stenographic or other record is maintained; or

3. In a matter that involves only ministerial action by the department; or

4. In a matter before the department of revenue or tax appeals commission that involves the representation of a client in connection with a tax matter.

(b) This subsection does not apply to representation by a state public official acting in his or her official capacity.

(8) Except in the case where the state public office formerly held was that of legislator, legislative employee under s. 20.923 (6) (bp), (f), (g) or (h), chief clerk of a house of the legislature, sergeant at arms of a house of the legislature or a permanent employee occupying the position of auditor for the legislative audit bureau:

(a) No former state public official, for 12 months following the date on which he or she ceases to be a state public official, may, for compensation, on behalf of any person other than a governmental entity, make any formal or informal appearance before, or negotiate with, any officer or employee of the department with which he or she was associated as a state public official within 12 months prior to the date on which he or she ceased to be a state public official.

(b) No former state public official, for 12 months following the date on which he or she ceases to be a state public official, may, for compensation, on behalf of any person other than a governmental entity, make any formal or informal appearance before, or negotiate with, any officer or employee of a department in connection with any judicial or quasi−judicial proceeding, application, contract, claim, or charge which might give rise to a judicial or quasi−judicial proceeding which was under the former official's responsibility as a state public official within 12 months prior to the date on which he or she ceased to be a state public official.

(c) No former state public official may, for compensation, act on behalf of any party other than the state in connection with any judicial or quasi−judicial proceeding, application, contract, claim, or charge which might give rise to a judicial or quasi−judicial proceeding in which the former official participated personally and substantially as a state public official.

(9) The attorney general may not engage in the private practice of law during the period in which he or she holds that office. No justice of the supreme court and no judge of any court of record may engage in the private practice of law during the period in which he or she holds that office. No full−time district attorney may engage in the private practice of law during the period in which he or she holds that office, except as authorized in s. 978.06 (5).

(10) This section does not prohibit a legislator from making inquiries for information on behalf of a person or from representing a person before a department if he or she receives no compensation therefor beyond the salary and other compensation or reimbursement to which the legislator is entitled by law, except as authorized under sub. (7).

(11) The legislature recognizes that all state public officials and employees and all employees of the University of Wisconsin Hospitals and Clinics Authority should be guided by a code of ethics and thus:

(a) The administrator of the division of merit recruitment and selection in the office of state employment relations shall, with the board's advice, promulgate rules to implement a code of ethics for classified and unclassified state employees except state public officials subject to this subchapter, unclassified personnel in the University of Wisconsin System and officers and employees of the judicial branch.

NOTE: Par. (a) is amended eff. 7−1−13 by 2011 Wis. Act 32 to read:

(a) The administrator of the division of merit recruitment and selection in the office of state employment relations shall, with the board's advice, promulgate rules to implement a code of ethics for classified and unclassified state employees except state public officials subject to this subchapter, personnel in the University of Wisconsin System, and officers and employees of the judicial branch.

(b) The board of regents of the University of Wisconsin System shall establish a code of ethics for unclassified personnel in that system who are not subject to this subchapter.

NOTE: Par. (b) is amended eff. 7−1−13 by 2011 Wis. Act 32 to read:

(b) The board of regents of the University of Wisconsin System shall establish a code of ethics for personnel in that system who are not subject to this subchapter.

(c) The supreme court shall promulgate a code of judicial ethics for officers and employees of the judiciary and candidates for judicial office which shall include financial disclosure requirements. All justices and judges shall, in addition to complying with this subchapter, adhere to the code of judicial ethics.

(d) The board of directors of the University of Wisconsin Hospitals and Clinics Authority shall establish a code of ethics for employees of the authority who are not state public officials.

(12) No agency, as defined in s. 16.52 (7), or officer or employee thereof may present any request, or knowingly utilize any interests outside the agency to present any request, to either house of the legislature or any member or committee thereof, for appropriations which exceed the amount requested by the agency in the agency's most recent request submitted under s. 16.42.

Electronic reproduction of 2009−10 Wis. Stats. database, current through 2011 Wis. Act 39 and July 25, 2011.

(13) No state public official or candidate for state public office may, directly or by means of an agent, give, or offer or promise to give, or withhold, or offer or promise to withhold, his or her vote or influence, or promise to take or refrain from taking official action with respect to any proposed or pending matter in consideration of, or upon condition that, any other person make or refrain from making a political contribution, or provide or refrain from providing any service or other thing of value, to or for the benefit of a candidate, a political party, any person who is subject to a registration requirement under s. 11.05, or any person making a communication that contains a reference to a clearly identified state public official holding an elective office or to a candidate for state public office.

History: 1973 c. 90; Stats. 1973 s. 11.05; 1973 c. 334 ss. 33, 57; Stats. 1973 s. 19.45; 1977 c. 29; 1977 c. 196 s. 130 (2); 1977 c. 223, 277; 1977 c. 418 s. 923 (14); 1977 c. 419, 447; 1979 c. 120; 1983 a. 27 ss. 112, 2200 (15); 1983 a. 166 ss. 7, 16; 1985 a. 332 s. 251 (1); 1987 a. 365; 1989 a. 31, 338; 1991 a. 39, 316; 1995 a. 27; 1997 a. 27; 2001 a. 109; 2003 a. 33 ss. 279, 9160; 2003 a. 39; 2007 a. 1; 2011 a. 32.

Cross−reference: See also ch. ER−MRS 24, Wis. adm. code.

A county board may provide for a penalty in the nature of a forfeiture for a violation of a code of ethics ordinance but may not bar violators from running for office. A violation is not a neglect of duties under s. 59.10 [now 59.15] or an *ipso facto* cause for removal under s. 17.09 (1). 66 Atty. Gen. 148. See also 67 Atty. Gen. 164.

The ethics law does not prohibit a state public official from purchasing items and services that are available to the official because he or she holds public office. If the opportunity to purchase the item or service itself has substantial value, the purchase of the item or service is prohibited. 80 Atty. Gen. 201.

Sub. (12) is an unconstitutional infringement on free speech. Barnett v. State Ethics Board, 817 F. Supp. 67 (1993).

19.451 Discounts at certain stadiums. No person serving in a national, state or local office, as defined in s. 5.02, may accept any discount on the price of admission or parking charged to members of the general public, including any discount on the use of a sky box or private luxury box, at a stadium that is exempt from general property taxes under s. 70.11 (36).

History: 1991 a. 37.

19.46 Conflict of interest prohibited; exception. (1) Except in accordance with the board's advice under s. 5.05 (6a) and except as otherwise provided in sub. (3), no state public official may:

(a) Take any official action substantially affecting a matter in which the official, a member of his or her immediate family, or an organization with which the official is associated has a substantial financial interest.

(b) Use his or her office or position in a way that produces or assists in the production of a substantial benefit, direct or indirect, for the official, one or more members of the official's immediate family either separately or together, or an organization with which the official is associated.

(3) This section does not prohibit a state public official from taking any action concerning the lawful payment of salaries or employee benefits or reimbursement of actual and necessary expenses, or prohibit a state public official from taking official action with respect to any proposal to modify state law or the state administrative code.

History: 1973 c. 90; Stats. 1973 s. 11.06; 1973 c. 334 ss. 33, 57, 58; Stats. 1973 s. 19.46; 1975 c. 422; 1977 c. 223, 277, 449; 1983 a. 166; 1985 a. 29; 1989 a. 338; 2007 a. 1.

19.47 Statements of economic interests. All members and employees of the board shall file statements of economic interests with the board.

History: 1973 c. 90; Stats. 1973 s. 11.07; 1973 c. 334 ss. 33, 57; Stats. 1973 s. 19.47; 1975 c. 426 s. 3; 1977 c. 26, 277; 1983 a. 27, 166, 378; 1987 a. 186; 1989 a. 338; 1991 a. 39, 189; 2007 a. 1.

19.48 Duties of the board. The board shall:

(1) Promulgate rules necessary to carry out this subchapter and subch. III of ch. 13. The board shall give prompt notice of the contents of its rules to state public officials who will be affected thereby.

(2) Prescribe and make available forms for use under this subchapter and subch. III of ch. 13, including the forms specified in s. 13.685 (1).

(3) Accept and file any information related to the purposes of this subchapter or subch. III of ch. 13 which is voluntarily supplied by any person in addition to the information required by this subchapter.

(4) Preserve the statements of economic interests filed with it for a period of 6 years from the date of receipt in such form, including microfilming, optical imaging or electronic formatting, as will facilitate document retention, except that:

(a) Upon the expiration of 3 years after an individual ceases to be a state public official the board shall, unless the former state public official otherwise requests, destroy any statement of economic interests filed by him or her and any copies thereof in its possession.

(b) Upon the expiration of 3 years after any election at which a candidate for state public office was not elected, the board shall destroy any statements of economic interests filed by him or her as a candidate for state public office and any copies thereof in the board's possession, unless the individual continues to hold another position for which he or she is required to file a statement, or unless the individual otherwise requests.

(c) Upon the expiration of 3 years from the action of the senate upon a nomination for state public office at which the senate refused to consent to the appointment of the nominee, the board shall destroy any statements of economic interests filed by him or her as a nominee and any copies thereof in the board's possession, unless the individual continues to hold another position for which he or she is required to file a statement, or unless the nominee otherwise requests. This paragraph does not apply to any individual who is appointed to state public office under s. 17.20 (2).

(5) Except as provided in s. 19.55 (2) (c), make statements of economic interests filed with the board available for public inspection and copying during regular office hours and make copying facilities available at a charge not to exceed actual cost.

(6) Compile and maintain an index to all the statements of economic interests currently on file with the board to facilitate public access to such statements of economic interests.

(7) Prepare and publish special reports and technical studies to further the purposes of this subchapter and subch. III of ch. 13.

(8) Report the full name and address of any individual and the full name and address of any person represented by an individual seeking to copy or obtain information from a statement of economic interests in writing to the individual who filed it, as soon as possible.

(9) Administer programs to explain and interpret this subchapter and subch. III of ch. 13 for state public officials, and for elective state officials, candidates for state public office, legislative officials, agency officials, lobbyists, as defined in s. 13.62, local public officials, corporation counsels and attorneys for local governmental units. The programs shall provide advice regarding appropriate ethical and lobbying practices, with special emphasis on public interest lobbying. The board may delegate creation and implementation of any such program to a group representing the public interest. The board may charge a fee to participants in any such program.

(10) Compile and make available information filed with the board in ways designed to facilitate access to the information. The board may charge a fee to a person requesting information for compiling, disseminating or making available such information, except that the board shall not charge a fee for inspection at the board's office of any record otherwise open to public inspection under s. 19.35 (1).

(11) Maintain an Internet site on which the information required to be posted by agencies under s. 16.753 (4) can be posted and accessed. The information on the site shall be accessible directly or by linkage from a single page on the Internet.

History: 1973 c. 90; Stats. 1973 s. 11.08; 1973 c. 333; 1973 c. 334 ss. 33, 57; Stats. 1973 s. 19.48; 1975 c. 41; 1977 c. 223, 277; 1977 c. 447 ss. 37, 209; 1983 a. 166 ss. 10, 16; 1985 a. 164; 1989 a. 338, 359; 1991 a. 39, 269; 1995 a. 27; 1997 a. 186; 2005 a. 410.

Cross−reference: See also GAB, Wis. adm. code.

2009−10 Wis. Stats. database updated and current through 2011 Wis. Act 39 and July 25, 2011. Statutory changes effective on or prior to 9−1−11 are printed as if currently in effect. Statutory changes effective after 9−1−11 are designated by NOTES. See Are The Statutes on this Website Official?

Electronic reproduction of 2009−10 Wis. Stats. database, current through 2011 Wis. Act 39 and July 25, 2011.

19.55 Public inspection of records. (1) Except as provided in sub. (2) and s. 5.05 (5s), all records under this subchapter or subch. III of ch. 13 in the possession of the board are open to public inspection at all reasonable times. The board shall require an individual wishing to examine a statement of economic interests or the list of persons who inspect any statements which are in the board's possession to provide his or her full name and address, and if the individual is representing another person, the full name and address of the person which he or she represents. Such identification may be provided in writing or in person. The board shall record and retain for at least 3 years information obtained by it pursuant to this subsection. No individual may use a fictitious name or address or fail to identify a principal in making any request for inspection.

(2) The following records in the board's possession are not open for public inspection:

(c) Statements of economic interests and reports of economic transactions which are filed with the government accountability board by members or employees of the investment board, except that the government accountability board shall refer statements and reports filed by such individuals to the legislative audit bureau for its review, and except that a statement of economic interests filed by a member or employee of the investment board who is also an official required to file shall be open to public inspection.

(d) Records of the social security number of any individual who files an application for licensure as a lobbyist under s. 13.63 or who registers as a principal under s. 13.64, except to the department of children and families for purposes of administration of s. 49.22 or to the department of revenue for purposes of administration of s. 73.0301.

History: 1977 c. 277; 1981 c. 335 s. 26; 1983 a. 166 ss. 15, 16; 1985 a. 164; 1989 a. 31, 338; 1997 a. 191, 237; 1999 a. 32; 2007 a. 1, 20.

The extent of confidentiality of investment board nominees' statements of economic interests rests in the sound discretion of the senate committee to which the nomination is referred. 68 Atty. Gen. 378.

19.56 Honorariums, fees and expenses. (1) Every state public official is encouraged to meet with clubs, conventions, special interest groups, political groups, school groups and other gatherings to discuss and to interpret legislative, administrative, executive or judicial processes and proposals and issues initiated by or affecting a department or the judicial branch.

(2) (a) Except as provided in par. (b), every official required to file who receives for a published work or for the presentation of a talk or participation in a meeting, any lodging, transportation, money or other thing with a combined pecuniary value exceeding $50 excluding the value of food or beverage offered coincidentally with a talk or meeting shall, on his or her statement of economic interests, report the identity of every person from whom the official receives such lodging, transportation, money or other thing during his or her preceding taxable year, the circumstances under which it was received and the approximate value thereof.

(b) An official need not report on his or her statement of economic interests under par. (a) information pertaining to any lodging, transportation, money or other thing of pecuniary value which:

1. The official returns to the payor within 30 days of receipt;

2. Is paid to the official by a person identified on the official's statement of economic interests under s. 19.44 (1) (e) or (f) as a source of income;

3. The official can show by clear and convincing evidence was unrelated to and did not arise from the recipient's holding or having held a public office and was made for a purpose unrelated to the purposes specified in sub. (1);

4. The official has previously reported to the board as a matter of public record;

5. Is paid by the department or municipality of which the official's state public office is a part, or, in the case of a district attorney, is paid by that department or a county which the district attorney serves, or, in the case of a justice or judge of a court of record, is paid from the appropriations for operation of the state court system; or

6. Is made available to the official by the Wisconsin Economic Development Corporation or the department of tourism in accordance with sub. (3) (e), (em) or (f).

(3) Notwithstanding s. 19.45:

(a) A state public official may receive and retain reimbursement or payment of actual and reasonable expenses and an elected official may retain reasonable compensation, for a published work or for the presentation of a talk or participation in a meeting related to a topic specified in sub. (1) if the payment or reimbursement is paid or arranged by the organizer of the event or the publisher of the work.

(b) A state public official may receive and retain anything of value if the activity or occasion for which it is given is unrelated to the official's use of the state's time, facilities, services or supplies not generally available to all citizens of this state and the official can show by clear and convincing evidence that the payment or reimbursement was unrelated to and did not arise from the recipient's holding or having held a public office and was paid for a purpose unrelated to the purposes specified in sub. (1).

(c) A state public official may receive and retain from the state or on behalf of the state transportation, lodging, meals, food or beverage, or reimbursement therefor or payment or reimbursement of actual and reasonable costs that the official can show by clear and convincing evidence were incurred or received on behalf of the state of Wisconsin and primarily for the benefit of the state and not primarily for the private benefit of the official or any other person.

(d) A state public official may receive and retain from a political committee under ch. 11 transportation, lodging, meals, food or beverage, or reimbursement therefor or payment or reimbursement of costs permitted and reported in accordance with ch. 11.

(e) A state public official who is an officer or employee of the Wisconsin Economic Development Corporation may solicit, receive and retain on behalf of the state anything of value for the purpose of any of the following:

1. The sponsorship by the Wisconsin Economic Development Corporation of a trip to a foreign country primarily to promote trade between that country and this state that the Wisconsin Economic Development Corporation can demonstrate through clear and convincing evidence is primarily for the benefit of this state.

2. Hosting individuals in order to promote business, economic development, tourism or conferences sponsored by multistate, national or international associations of governments or governmental officials.

(em) A state public official who is an officer or employee of the department of tourism may solicit, receive and retain on behalf of the state anything of value for the purpose of hosting individuals in order to promote tourism.

(f) A state public official may receive and retain from the Wisconsin Economic Development Corporation anything of value which the Wisconsin Economic Development Corporation is authorized to provide under par. (e) and may receive and retain from the department of tourism anything of value which the department of tourism is authorized to provide under par. (em).

(4) If a state public official receives a payment not authorized by this subchapter, in cash or otherwise, for a published work or a talk or meeting, the official may not retain it. If practicable, the official shall deposit it with the department or municipality with which he or she is associated or, in the case of a justice or judge of a court of record, with the director of state courts. If that is not practicable, the official shall return it or its equivalent to the payor or convey it to the state or to a charitable organization other than one with which he or she is associated.

History: 1977 c. 277; 1983 a. 61, 538; 1985 a. 203; 1989 a. 31, 338; 1991 a. 39; 1995 a. 27 ss. 455 to 457, 9116 (5); 2011 a. 32.

The interaction of s. 19.56 with the prohibition against furnishing anything of pecuniary value to state officials under s. 13.625 is discussed. 80 Atty. Gen. 205.

2009−10 Wis. Stats. database updated and current through 2011 Wis. Act 39 and July 25, 2011. Statutory changes effective on or prior to 9−1−11 are printed as if currently in effect. Statutory changes effective after 9−1−11 are designated by NOTES. See Are The Statutes on this Website Official?

Electronic reproduction of 2009−10 Wis. Stats. database, current through 2011 Wis. Act 39 and July 25, 2011.

19.57 Conferences, visits and economic development activities. The Wisconsin Economic Development Corporation shall file a report with the board no later than April 30 annually, specifying the source and amount of anything of value received by the Wisconsin Economic Development Corporation during the preceding calendar year for a purpose specified in s. 19.56 (3) (e), and the program or activity in connection with which the thing is received, together with the location and date of that program or activity.

History: 1991 a. 39; 1995 a. 27 s. 9116 (5); 2011 a. 32.

19.575 Tourism activities. The department of tourism shall file a report with the board no later than April 30 annually, specifying the source and amount of anything of value received by the department of tourism during the preceding calendar year for a purpose specified in s. 19.56 (3) (em) and the program or activity in connection with which the thing is received, together with the location and date of that program or activity.

History: 1995 a. 27.

19.579 Civil penalties. (1) Except as provided in sub. (2), any person who violates this subchapter may be required to forfeit not more than $500 for each violation of s. 19.43, 19.44, or 19.56 (2) or not more than $5,000 for each violation of any other provision of this subchapter. If the court determines that the accused has realized economic gain as a result of the violation, the court may, in addition, order the accused to forfeit the amount gained as a result of the violation. In addition, if the court determines that a state public official has violated s. 19.45 (13), the court may order the official to forfeit an amount equal to the amount or value of any political contribution, service, or other thing of value that was wrongfully obtained. If the court determines that a state public official has violated s. 19.45 (13) and no political contribution, service or other thing of value was obtained, the court may order the official to forfeit an amount equal to the maximum contribution authorized under s. 11.26 (1) for the office held or sought by the official, whichever amount is greater. The attorney general, when so requested by the board, shall institute proceedings to recover any forfeiture incurred under this section which is not paid by the person against whom it is assessed.

(2) Any person who violates s. 19.45 (13) may be required to forfeit not more than $5,000.

History: 2003 a. 39; 2007 a. 1 ss. 121, 130, 131.

19.58 Criminal penalties. (1) (a) Any person who intentionally violates any provision of this subchapter except s. 19.45 (13) or 19.59 (1) (br), or a code of ethics adopted or established under s. 19.45 (11) (a) or (b), shall be fined not less than $100 nor more than $5,000 or imprisoned not more than one year in the county jail or both.

(b) Any person who intentionally violates s. 19.45 (13) or 19.59 (1) (br) is guilty of a Class I felony.

(2) The penalties under sub. (1) do not limit the power of either house of the legislature to discipline its own members or to impeach a public official, or limit the power of a department to discipline its state public officials or employees.

(3) In this section "intentionally" has the meaning given under s. 939.23.

History: 1973 c. 90; Stats. 1973 s. 11.10; 1973 c. 334 ss. 33, 57, 58; Stats. 1973 s. 19.50; 1975 c. 200; 1977 c. 277 ss. 34, 37; Stats. 1977 s. 19.58; 2003 a. 39.

19.59 Codes of ethics for local government officials, employees and candidates. (1) (a) No local public official may use his or her public position or office to obtain financial gain or anything of substantial value for the private benefit of himself or herself or his or her immediate family, or for an organization with which he or she is associated. A violation of this paragraph includes the acceptance of free or discounted admissions to a professional baseball or football game by a member of the district board of a local professional baseball park district created under subch. III of ch. 229 or a local professional football stadium district created under subch. IV of ch. 229. This paragraph does not prohibit a local public official from using the title or prestige of his or her office to obtain campaign contributions that are permitted and reported as required by ch. 11.

(b) No person may offer or give to a local public official, directly or indirectly, and no local public official may solicit or accept from any person, directly or indirectly, anything of value if it could reasonably be expected to influence the local public official's vote, official actions or judgment, or could reasonably be considered as a reward for any official action or inaction on the part of the local public official. This paragraph does not prohibit a local public official from engaging in outside employment.

(br) No local public official or candidate for local public office may, directly or by means of an agent, give, or offer or promise to give, or withhold, or offer or promise to withhold, his or her vote or influence, or promise to take or refrain from taking official action with respect to any proposed or pending matter in consideration of, or upon condition that, any other person make or refrain from making a political contribution, or provide or refrain from providing any service or other thing of value, to or for the benefit of a candidate, a political party, any person who is subject to a registration requirement under s. 11.05, or any person making a communication that contains a reference to a clearly identified local public official holding an elective office or to a candidate for local public office.

(c) Except as otherwise provided in par. (d), no local public official may:

1. Take any official action substantially affecting a matter in which the official, a member of his or her immediate family, or an organization with which the official is associated has a substantial financial interest.

2. Use his or her office or position in a way that produces or assists in the production of a substantial benefit, direct or indirect, for the official, one or more members of the official's immediate family either separately or together, or an organization with which the official is associated.

(d) Paragraph (c) does not prohibit a local public official from taking any action concerning the lawful payment of salaries or employee benefits or reimbursement of actual and necessary expenses, or prohibit a local public official from taking official action with respect to any proposal to modify a county or municipal ordinance.

(f) Paragraphs (a) to (c) do not apply to the members of a local committee appointed under s. 289.33 (7) (a) to negotiate with the owner or operator of, or applicant for a license to operate, a solid waste disposal or hazardous waste facility under s. 289.33, with respect to any matter contained or proposed to be contained in a written agreement between a municipality and the owner, operator or applicant or in an arbitration award or proposed award that is applicable to those parties.

(g) 1. In this paragraph:

a. "District" means a local professional baseball park district created under subch. III of ch. 229 or a local professional football stadium district created under subch. IV of ch. 229.

b. "District board member" means a member of the district board of a district.

2. No district board member may accept or retain any transportation, lodging, meals, food or beverage, or reimbursement therefor, except in accordance with this paragraph.

3. A district board member may receive and retain reimbursement or payment of actual and reasonable expenses for a published work or for the presentation of a talk or participation in a meeting related to processes, proposals and issues affecting a district if the payment or reimbursement is paid or arranged by the organizer of the event or the publisher of the work.

4. A district board member may receive and retain anything of value if the activity or occasion for which it is given is unrelated to the member's use of the time, facilities, services or supplies of the district not generally available to all residents of the district and the member can show by clear and convincing evidence that

Electronic reproduction of 2009−10 Wis. Stats. database, current through 2011 Wis. Act 39 and July 25, 2011.

the payment or reimbursement was unrelated to and did not arise from the recipient's holding or having held a public office and was paid for a purpose unrelated to the purposes specified in subd. 3.

5. A district board member may receive and retain from the district or on behalf of the district transportation, lodging, meals, food or beverage, or reimbursement therefor or payment or reimbursement of actual and reasonable costs that the member can show by clear and convincing evidence were incurred or received on behalf of the district and primarily for the benefit of the district and not primarily for the private benefit of the member or any other person.

6. No district board member may intentionally use or disclose information gained in the course of or by reason of his or her official position or activities in any way that could result in the receipt of anything of value for himself or herself, for his or her immediate family, or for any other person, if the information has not been communicated to the public or is not public information.

7. No district board member may use or attempt to use the position held by the member to influence or gain unlawful benefits, advantages or privileges personally or for others.

8. No district board member, member of a district board member's immediate family, nor any organization with which the district board member or a member of the district board member's immediate family owns or controls at least 10% of the outstanding equity, voting rights, or outstanding indebtedness may enter into any contract or lease involving a payment or payments of more than $3,000 within a 12−month period, in whole or in part derived from district funds unless the district board member has first made written disclosure of the nature and extent of such relationship or interest to the government accountability board and to the district. Any contract or lease entered into in violation of this subdivision may be voided by the district in an action commenced within 3 years of the date on which the government accountability board, or the district, knew or should have known that a violation of this subdivision had occurred. This subdivision does not affect the application of s. 946.13.

9. No former district board member, for 12 months following the date on which he or she ceases to be a district board member, may, for compensation, on behalf of any person other than a governmental entity, make any formal or informal appearance before, or negotiate with, any officer or employee of the district with which he or she was associated as a district board member within 12 months prior to the date on which he or she ceased to be a district board member.

10. No former district board member, for 12 months following the date on which he or she ceases to be a district board member, may, for compensation, on behalf of any person other than a governmental entity, make any formal or informal appearance before, or negotiate with, any officer or employee of a district with which he or she was associated as a district board member in connection with any judicial or quasi−judicial proceeding, application, contract, claim, or charge which might give rise to a judicial or quasi−judicial proceeding which was under the former member's responsibility as a district board member within 12 months prior to the date on which he or she ceased to be a member.

11. No former district board member may, for compensation, act on behalf of any party other than the district with which he or she was associated as a district board member in connection with any judicial or quasi−judicial proceeding, application, contract, claim, or charge which might give rise to a judicial or quasi−judicial proceeding in which the former member participated personally and substantially as a district board member.

(1m) In addition to the requirements of sub. (1), any county, city, village or town may enact an ordinance establishing a code of ethics for public officials and employees of the county or municipality and candidates for county or municipal elective offices.

(2) An ordinance enacted under this section shall specify the positions to which it applies. The ordinance may apply to members of the immediate family of individuals who hold positions or who are candidates for positions to which the ordinance applies.

(3) An ordinance enacted under this section may contain any of the following provisions:

(a) A requirement for local public officials, other employees of the county or municipality and candidates for local public office to identify any of the economic interests specified in s. 19.44.

(b) A provision directing the county or municipal clerk or board of election commissioners to omit the name of any candidate from an election ballot who fails to disclose his or her economic interests in accordance with the requirements of the ordinance.

(c) A provision directing the county or municipal treasurer to withhold the payment of salaries or expenses from any local public official or other employee of the county or municipality who fails to disclose his or her economic interests in accordance with the requirements of the ordinance.

(d) A provision vesting administration and civil enforcement of the ordinance with an ethics board appointed in a manner specified in the ordinance. A board created under this paragraph may issue subpoenas, administer oaths and investigate any violation of the ordinance on its own motion or upon complaint by any person. The ordinance may empower the board to issue opinions upon request. Records of the board's opinions, opinion requests and investigations of violations of the ordinance may be closed in whole or in part to public inspection if the ordinance so provides.

(e) Provisions prescribing ethical standards of conduct and prohibiting conflicts of interest on the part of local public officials and other employees of the county or municipality or on the part of former local public officials or former employees of the county or municipality.

(f) A provision prescribing a forfeiture for violation of the ordinance in an amount not exceeding $1,000 for each offense. A minimum forfeiture not exceeding $100 for each offense may also be prescribed.

(4) This section may not be construed to limit the authority of a county, city, village or town to regulate the conduct of its officials and employees to the extent that it has authority to regulate that conduct under the constitution or other laws.

(5) (a) Any individual, either personally or on behalf of an organization or governmental body, may request of a county or municipal ethics board, or, in the absence of a county or municipal ethics board, a county corporation counsel or attorney for a local governmental unit, an advisory opinion regarding the propriety of any matter to which the person is or may become a party. Any appointing officer, with the consent of a prospective appointee, may request of a county or municipal ethics board, or, in the absence of a county or municipal ethics board, a county corporation counsel or attorney for a local governmental unit an advisory opinion regarding the propriety of any matter to which the prospective appointee is or may become a party. The county or municipal ethics board or the county corporation counsel or attorney shall review a request for an advisory opinion and may advise the person making the request. Advisory opinions and requests therefor shall be in writing. It is prima facie evidence of intent to comply with this section or any ordinance enacted under this section when a person refers a matter to a county or municipal ethics board or a county corporation counsel or attorney for a local governmental unit and abides by the advisory opinion, if the material facts are as stated in the opinion request. A county or municipal ethics board may authorize a county corporation counsel or attorney to act in its stead in instances where delay is of substantial inconvenience or detriment to the requesting party. Except as provided in par. (b), neither a county corporation counsel or attorney for a local governmental unit nor a member or agent of a county or municipal ethics board may make public the identity of an individual requesting an advisory opinion or of individuals or organizations mentioned in the opinion.

Electronic reproduction of 2009−10 Wis. Stats. database, current through 2011 Wis. Act 39 and July 25, 2011.

(b) A county or municipal ethics board, county corporation counsel or attorney for a local governmental unit replying to a request for an advisory opinion may make the opinion public with the consent of the individual requesting the advisory opinion or the organization or governmental body on whose behalf it is requested and may make public a summary of an advisory opinion issued under this subsection after making sufficient alterations in the summary to prevent disclosing the identities of individuals involved in the opinion. A person who makes or purports to make public the substance of or any portion of an advisory opinion requested by or on behalf of the person waives the confidentiality of the request for an advisory opinion and of any records obtained or prepared by the county or municipal ethics board, the county corporation counsel or the attorney for the local governmental unit in connection with the request for an advisory opinion.

(6) Any county corporation counsel, attorney for a local governmental unit or statewide association of local governmental units may request the board to issue an opinion concerning the interpretation of this section. The board shall review such a request and may advise the person making the request.

(7) (a) Any person who violates sub. (1) may be required to forfeit not more than $1,000 for each violation, and, if the court determines that the accused has violated sub. (1) (br), the court may, in addition, order the accused to forfeit an amount equal to the amount or value of any political contribution, service, or other thing of value that was wrongfully obtained.

(b) Any person who violates sub. (1) may be required to forfeit not more than $1,000 for each violation, and, if the court determines that a local public official has violated sub. (1) (br) and no political contribution, service or other thing of value was obtained, the court may, in addition, order the accused to forfeit an amount equal to the maximum contribution authorized under s. 11.26 (1) for the office held or sought by the official, whichever amount is greater.

(8) (a) Subsection (1) shall be enforced in the name and on behalf of the state by action of the district attorney of any county wherein a violation may occur, upon the verified complaint of any person.

(b) In addition and supplementary to the remedy provided in sub. (7), the district attorney may commence an action, separately or in conjunction with an action brought to obtain the remedy provided in sub. (7), to obtain such other legal or equitable relief, including but not limited to mandamus, injunction or declaratory judgment, as may be appropriate under the circumstances.

(c) If the district attorney fails to commence an action to enforce sub. (1) (a), (b), or (c) to (g) within 20 days after receiving a verified complaint or if the district attorney refuses to commence such an action, the person making the complaint may petition the attorney general to act upon the complaint. The attorney general may then bring an action under par. (a) or (b), or both.

(cm) No complaint alleging a violation of sub. (1) (br) may be filed during the period beginning 120 days before a general or spring election, or during the period commencing on the date of the order of a special election under s. 8.50, and ending on the date of that election, against a candidate who files a declaration of candidacy to have his or her name appear on the ballot at that election.

(cn) If the district attorney for the county in which a violation of sub. (1) (br) is alleged to occur receives a verified complaint alleging a violation of sub. (1) (br), the district attorney shall, within 30 days after receipt of the complaint, either commence an investigation of the allegations contained in the complaint or dismiss the complaint. If the district attorney dismisses the complaint, with or without investigation, the district attorney shall notify the complainant in writing. Upon receiving notification of the dismissal, the complainant may then file the complaint with the attorney general or the district attorney for a county that is adjacent to the county in which the violation is alleged to occur. The attorney general or district attorney may then investigate the allegations contained in the complaint and commence a prosecution.

(d) If the district attorney prevails in such an action, the court shall award any forfeiture recovered together with reasonable costs to the county wherein the violation occurs. If the attorney general prevails in such an action, the court shall award any forfeiture recovered together with reasonable costs to the state.

History: 1979 c. 120; 1981 c. 149; 1981 c. 335 s. 26; 1983 a. 166 s. 16; 1991 a. 39, 269; 1995 a. 56, 227; 1999 a. 167; 2001 a. 109; 2003 a. 39; 2007 a. 1.

SUBCHAPTER IV

PERSONAL INFORMATION PRACTICES

19.62 Definitions. In this subchapter:

(1) "Authority" has the meaning specified in s. 19.32 (1).

(2) "Internet protocol address" means an identifier for a computer or device on a transmission control protocol−Internet protocol network.

(3) "Matching program" means the computerized comparison of information in one records series to information in another records series for use by an authority or a federal agency to establish or verify an individual's eligibility for any right, privilege or benefit or to recoup payments or delinquent debts under programs of an authority or federal agency.

(5) "Personally identifiable information" means information that can be associated with a particular individual through one or more identifiers or other information or circumstances.

(6) "Record" has the meaning specified in s. 19.32 (2).

(7) "Records series" means records that are arranged under a manual or automated filing system, or are kept together as a unit, because they relate to a particular subject, result from the same activity or have a particular form.

(8) "State authority" means an authority that is a state elected official, agency, board, commission, committee, council, department or public body corporate and politic created by constitution, statute, rule or order; a state governmental or quasi−governmental corporation; the supreme court or court of appeals; or the assembly or senate.

History: 1991 a. 39; 1993 a. 215; 1995 a. 27; 1997 a. 79; 2001 a. 16; 2007 a. 20.

19.65 Rules of conduct; employee training; and security. An authority shall do all of the following:

(1) Develop rules of conduct for its employees who are involved in collecting, maintaining, using, providing access to, sharing or archiving personally identifiable information.

(2) Ensure that the persons identified in sub. (1) know their duties and responsibilities relating to protecting personal privacy, including applicable state and federal laws.

History: 1991 a. 39.

19.67 Data collection. (1) COLLECTION FROM DATA SUBJECT OR VERIFICATION. An authority that maintains personally identifiable information that may result in an adverse determination about any individual's rights, benefits or privileges shall, to the greatest extent practicable, do at least one of the following:

(a) Collect the information directly from the individual.

(b) Verify the information, if collected from another person.

History: 1991 a. 39.

19.68 Collection of personally identifiable information from Internet users. No state authority that maintains an Internet site may use that site to obtain personally identifiable information from any person who visits that site without the consent of the person from whom the information is obtained. This section does not apply to acquisition of Internet protocol addresses.

History: 2001 a. 16.

Electronic reproduction of 2009−10 Wis. Stats. database, current through 2011 Wis. Act 39 and July 25, 2011.

19.69 Computer matching. (1) MATCHING SPECIFICATION. A state authority may not use or allow the use of personally identifiable information maintained by the state authority in a match under a matching program, or provide personally identifiable information for use in a match under a matching program, unless the state authority has specified in writing all of the following for the matching program:

(a) The purpose and legal authority for the matching program.

(b) The justification for the program and the anticipated results, including an estimate of any savings.

(c) A description of the information that will be matched.

(2) COPY TO PUBLIC RECORDS BOARD. A state authority that prepares a written specification of a matching program under sub. (1) shall provide to the public records board a copy of the specification and any subsequent revision of the specification within 30 days after the state authority prepares the specification or the revision.

(3) NOTICE OF ADVERSE ACTION. (a) Except as provided under par. (b), a state authority may not take an adverse action against an individual as a result of information produced by a matching program until after the state authority has notified the individual, in writing, of the proposed action.

(b) A state authority may grant an exception to par. (a) if it finds that the information in the records series is sufficiently reliable.

(4) NONAPPLICABILITY. This section does not apply to any matching program established between the secretary of transportation and the commissioner of the federal social security administration pursuant to an agreement specified under s. 85.61 (2).

History: 1991 a. 39, 269; 1995 a. 27; 2003 a. 265.

19.71 Sale of names or addresses. An authority may not sell or rent a record containing an individual's name or address of residence, unless specifically authorized by state law. The collection of fees under s. 19.35 (3) is not a sale or rental under this section.

History: 1991 a. 39.

19.77 Summary of case law and attorney general opinions. Annually, the attorney general shall summarize case law and attorney general opinions relating to due process and other legal issues involving the collection, maintenance, use, provision of access to, sharing or archiving of personally identifiable information by authorities. The attorney general shall provide the summary, at no charge, to interested persons.

History: 1991 a. 39.

19.80 Penalties. (2) EMPLOYEE DISCIPLINE. Any person employed by an authority who violates this subchapter may be discharged or suspended without pay.

(3) PENALTIES. (a) Any person who willfully collects, discloses or maintains personally identifiable information in violation of federal or state law may be required to forfeit not more than $500 for each violation.

(b) Any person who willfully requests or obtains personally identifiable information from an authority under false pretenses may be required to forfeit not more than $500 for each violation.

History: 1991 a. 39, 269.

SUBCHAPTER V

OPEN MEETINGS OF GOVERNMENTAL BODIES

19.81 Declaration of policy. (1) In recognition of the fact that a representative government of the American type is dependent upon an informed electorate, it is declared to be the policy of this state that the public is entitled to the fullest and most complete information regarding the affairs of government as is compatible with the conduct of governmental business.

(2) To implement and ensure the public policy herein expressed, all meetings of all state and local governmental bodies shall be publicly held in places reasonably accessible to members of the public and shall be open to all citizens at all times unless otherwise expressly provided by law.

(3) In conformance with article IV, section 10, of the constitution, which states that the doors of each house shall remain open, except when the public welfare requires secrecy, it is declared to be the intent of the legislature to comply to the fullest extent with this subchapter.

(4) This subchapter shall be liberally construed to achieve the purposes set forth in this section, and the rule that penal statutes must be strictly construed shall be limited to the enforcement of forfeitures and shall not otherwise apply to actions brought under this subchapter or to interpretations thereof.

History: 1975 c. 426; 1983 a. 192.

NOTE: The following annotations relate to s. 66.77, repealed by Chapter 426, laws of 1975.

Subsequent to the presentation of evidence by the taxpayer, a board of review's consideration of testimony by the village assessor at an executive session was contrary to the open meeting law. Although it was permissible for the board to convene a closed session for the purpose of deliberating after a quasi−judicial hearing, the proceedings did not constitute mere deliberations but were a continuation of the quasi−judicial hearing without the presence of or notice to the objecting taxpayer. Dolphin v. Butler Board of Review, 70 Wis. 2d 403, 234 N.W.2d 277 (1975).

The open meeting law is not applicable to the judicial commission. State ex rel. Lynch v. Dancey, 71 Wis. 2d 287, 238 N.W.2d 81 (1976).

A regular open meeting, held subsequent to a closed meeting on another subject, does not constitute a reconvened open meeting when there was no prior open meeting on that day. 58 Atty. Gen. 41.

Consideration of a resolution is a formal action of an administrative or minor governing body and when taken in proper closed session, the resolution and result of the vote must be made available for public inspection, pursuant to 19.21, absent a specific showing that the public interest would be adversely affected. 60 Atty. Gen. 9.

Joint apprenticeship committees, appointed pursuant to Wis. Adm. Code provisions, are governmental bodies and subject to the requirements of the open meeting law. 63 Atty. Gen. 363.

Voting procedures employed by worker's compensation and unemployment advisory councils that utilized adjournment of public meeting for purposes of having members representing employers and members representing employees or workers to separately meet in closed caucuses and to vote as a block on reconvening was contrary to the open records law. 63 Atty. Gen. 414.

A governmental body can call closed sessions for proper purposes without giving notice to members of the news media who have filed written requests. 63 Atty. Gen. 470.

The meaning of "communication" is discussed with reference to giving the public and news media members adequate notice. 63 Atty. Gen. 509.

The posting in the governor's office of agenda of future investment board meetings is not sufficient communication to the public or the news media who have filed a written request for notice. 63 Atty. Gen. 549.

A county board may not utilize an unidentified paper ballot in voting to appoint a county highway commissioner, but may vote by ayes and nays or show of hands at an open session if some member does not require the vote to be taken in such manner that the vote of each member may be ascertained and recorded. 63 Atty. Gen. 569.

NOTE: The following annotations refer to ss. 19.81 to 19.98.

When the city of Milwaukee and a private non−profit festival organization incorporated the open meetings law into a contract, the contract allowed public enforcement of the contractual provisions concerning open meetings. Journal/Sentinel, Inc. v. Pleva, 155 Wis. 2d 704, 456 N.W.2d 359 (1990).

Sub. (2) requires that a meeting be held in a facility that gives reasonable public access, not total access. No person may be systematically excluded or arbitrarily refused admittance. State ex rel. Badke v. Greendale Village Bd. 173 Wis. 2d 553, 494 N.W.2d 408 (1993).

This subchapter is discussed. 65 Atty. Gen. preface.

Public notice requirements for meetings of a city district school board under this subchapter and s. 120.48, 1983 stats., are discussed. 66 Atty. Gen. 93.

A volunteer fire department organized as a nonprofit corporation under s. 213.05 is not subject to the open meeting law. 66 Atty. Gen. 113.

Anyone has the right to tape−record an open meeting of a governmental body provided the meeting is not thereby physically disrupted. 66 Atty. Gen. 318.

The open meeting law does not apply to a coroner's inquest. 67 Atty. Gen. 250.

The open meeting law does not apply if the common council hears a grievance under a collective bargaining agreement. 67 Atty. Gen. 276.

The application of the open meeting law to the duties of WERC is discussed. 68 Atty. Gen. 171.

A senate committee meeting was probably held in violation of the open meetings law although there was never any intention prior to the gathering to attempt to debate any matter of policy, to reach agreement on differences, to make any decisions on any bill or part thereof, to take any votes, or to resolve substantive differences. Quorum gatherings should be presumed to be in violation of the law, due to a quorum's ability to thereafter call, compose and control by vote a formal meeting of a governmental body. 71 Atty. Gen. 63.

Nonstock corporations created by statute as bodies politic clearly fall within the term "governmental body" as defined in the open meetings law and are subject to the provisions of the open meetings law. Nonstock corporations that were not created by the legislature or by rule, but were created by private citizens are not bodies politic and not governmental bodies. 73 Atty. Gen. 53.

2009−10 Wis. Stats. database updated and current through 2011 Wis. Act 39 and July 25, 2011. Statutory changes effective on or prior to 9−1−11 are printed as if currently in effect. Statutory changes effective after 9−1−11 are designated by NOTES. See Are The Statutes on this Website Official?

Electronic reproduction of 2009−10 Wis. Stats. database, current through 2011 Wis. Act 39 and July 25, 2011.

A "quasi−governmental corporation" in sub. (1) includes private corporations that closely resemble governmental corporations in function, effect, or status. 80 Atty. Gen. 129.

Understanding Wisconsin's open meeting law. Harvey, WBB September 1980.

Getting the Best of Both Worlds: Open Government and Economic Development. Westerberg. Wis. Law. Feb. 2009.

19.82 Definitions. As used in this subchapter:

(1) "Governmental body" means a state or local agency, board, commission, committee, council, department or public body corporate and politic created by constitution, statute, ordinance, rule or order; a governmental or quasi−governmental corporation except for the Bradley center sports and entertainment corporation; a local exposition district under subch. II of ch. 229; a long−term care district under s. 46.2895; or a formally constituted subunit of any of the foregoing, but excludes any such body or committee or subunit of such body which is formed for or meeting for the purpose of collective bargaining under subch. I, IV, or V of ch. 111.

(2) "Meeting" means the convening of members of a governmental body for the purpose of exercising the responsibilities, authority, power or duties delegated to or vested in the body. If one−half or more of the members of a governmental body are present, the meeting is rebuttably presumed to be for the purpose of exercising the responsibilities, authority, power or duties delegated to or vested in the body. The term does not include any social or chance gathering or conference which is not intended to avoid this subchapter, any gathering of the members of a town board for the purpose specified in s. 60.50 (6), any gathering of the commissioners of a town sanitary district for the purpose specified in s. 60.77 (5) (k), or any gathering of the members of a drainage board created under s. 88.16, 1991 stats., or under s. 88.17, for a purpose specified in s. 88.065 (5) (a).

(3) "Open session" means a meeting which is held in a place reasonably accessible to members of the public and open to all citizens at all times. In the case of a state governmental body, it means a meeting which is held in a building and room thereof which enables access by persons with functional limitations, as defined in s. 101.13 (1).

History: 1975 c. 426; 1977 c. 364, 447; 1985 a. 26, 29, 332; 1987 a. 305; 1993 a. 215, 263, 456, 491; 1995 a. 27, 185; 1997 a. 79; 1999 a. 9; 2007 a. 20, 96; 2009 a. 28; 2011 a. 10.

A "meeting" under sub. (2) was found although the governmental body was not empowered to exercise the final powers of its parent body. State v. Swanson, 92 Wis. 2d 310, 284 N.W.2d 655 (1979).

A "meeting" under sub. (2) was found when members met with a purpose to engage in government business and the number of members present was sufficient to determine the parent body's course of action regarding the proposal discussed. State ex rel. Newspapers v. Showers, 135 Wis. 2d 77, 398 N.W.2d 154 (1987).

The open meetings law is not meant to apply to single−member governmental bodies. Sub. (2) speaks of a meeting of the members, plural, implying there must be at least two members of a governmental body. Plourde v. Berends, 2006 WI App 147, 294 Wis. 2d 746, 720 N.W.2d 130, 05−2106.

A corporation is quasi−governmental if, based on the totality of circumstances, it resembles a governmental corporation in function, effect, or status, requiring a case−by−case analysis. Here, a primary consideration was that the body was funded exclusively by public tax dollars or interest thereon. Additionally, its office was located in the municipal building, it was listed on the city Web site, the city provided it with clerical support and office supplies, all its assets revert to the city if it ceases to exist, its books are open for city inspection, the mayor and another city official are directors, and it had no clients other than the city. State v. Beaver Dam Area Development Corporation, 2008 WI 90, 312 Wis. 2d 84, 752 N.W.2d 295, 06−0662.

A municipal public utility commission managing a city owned public electric utility is a governmental body under sub. (1). 65 Atty. Gen. 243.

A "private conference" under s. 118.22 (3), on nonrenewal of a teacher's contract is a "meeting" within s. 19.82 (2). 66 Atty. Gen. 211.

A private home may qualify as a meeting place under sub. (3). 67 Atty. Gen. 125.

A telephone conference call involving members of governmental body is a "meeting" that must be reasonably accessible to the public and public notice must be given. 69 Atty. Gen. 143.

19.83 Meetings of governmental bodies. (1) Every meeting of a governmental body shall be preceded by public notice as provided in s. 19.84, and shall be held in open session. At any meeting of a governmental body, all discussion shall be held and all action of any kind, formal or informal, shall be initiated, deliberated upon and acted upon only in open session except as provided in s. 19.85.

(2) During a period of public comment under s. 19.84 (2), a governmental body may discuss any matter raised by the public.

History: 1975 c. 426; 1997 a. 123.

When a quorum of a governmental body attends the meeting of another governmental body when any one of the members is not also a member of the second body, the gathering is a "meeting," unless the gathering is social or by chance. State ex rel. Badke v. Greendale Village Board, 173 Wis. 2d 553, 494 N.W.2d 408 (1993).

19.84 Public notice. (1) Public notice of all meetings of a governmental body shall be given in the following manner:

(a) As required by any other statutes; and

(b) By communication from the chief presiding officer of a governmental body or such person's designee to the public, to those news media who have filed a written request for such notice, and to the official newspaper designated under ss. 985.04, 985.05 and 985.06 or, if none exists, to a news medium likely to give notice in the area.

(2) Every public notice of a meeting of a governmental body shall set forth the time, date, place and subject matter of the meeting, including that intended for consideration at any contemplated closed session, in such form as is reasonably likely to apprise members of the public and the news media thereof. The public notice of a meeting of a governmental body may provide for a period of public comment, during which the body may receive information from members of the public.

(3) Public notice of every meeting of a governmental body shall be given at least 24 hours prior to the commencement of such meeting unless for good cause such notice is impossible or impractical, in which case shorter notice may be given, but in no case may the notice be provided less than 2 hours in advance of the meeting.

(4) Separate public notice shall be given for each meeting of a governmental body at a time and date reasonably proximate to the time and date of the meeting.

(5) Departments and their subunits in any University of Wisconsin System institution or campus are exempt from the requirements of subs. (1) to (4) but shall provide meeting notice which is reasonably likely to apprise interested persons, and news media who have filed written requests for such notice.

(6) Notwithstanding the requirements of s. 19.83 and the requirements of this section, a governmental body which is a formally constituted subunit of a parent governmental body may conduct a meeting without public notice as required by this section during a lawful meeting of the parent governmental body, during a recess in such meeting or immediately after such meeting for the purpose of discussing or acting upon a matter which was the subject of that meeting of the parent governmental body. The presiding officer of the parent governmental body shall publicly announce the time, place and subject matter of the meeting of the subunit in advance at the meeting of the parent body.

History: 1975 c. 426; 1987 a. 305; 1993 a. 215; 1997 a. 123; 2007 a. 20.

There is no requirement in this section that the notice provided be exactly correct in every detail. State ex rel. Olson v. City of Baraboo Joint Review Board, 2002 WI App 64, 252 Wis. 2d 628, 643 N.W.2d 796, 01−0201.

Sub. (2) does not expressly require that the notice indicate whether a meeting will be purely deliberative or if action will be taken. The notice must alert the public of the importance of the meeting. Although a failure to expressly state whether action will be taken could be a violation, the importance of knowing whether a vote would be taken is diminished when no input from the audience is allowed or required. State ex rel. Olson v. City of Baraboo Joint Review Board, 2002 WI App 64, 252 Wis. 2d 628, 643 N.W.2d 796, 01−0201.

Sub. (2) sets forth a reasonableness standard for determining whether notice of a meeting is sufficient that strikes the proper balance between the public's right to information and the government's need to efficiently conduct its business. The standard requires taking into account the circumstances of the case, which includes analyzing such factors as the burden of providing more detailed notice, whether the subject is of particular public interest, and whether it involves non−routine action that the public would be unlikely to anticipate. Buswell v. Tomah Area School District, 2007 WI 71, 301 Wis. 2d 178, 732 N.W.2d 804, 05−2998.

Under sub. (1) (b), a written request for notice of meetings of a governmental body should be filed with the chief presiding officer or designee and a separate written request should be filed with each specific governmental body. 65 Atty. Gen. 166.

The method of giving notice pursuant to sub. (1) is discussed. 65 Atty. Gen. 250.

The specificity of notice required by a governmental body is discussed. 66 Atty. Gen. 143, 195.

2009−10 Wis. Stats. database updated and current through 2011 Wis. Act 39 and July 25, 2011. Statutory changes effective on or prior to 9−1−11 are printed as if currently in effect. Statutory changes effective after 9−1−11 are designated by NOTES. See Are The Statutes on this Website Official?

Electronic reproduction of 2009−10 Wis. Stats. database, current through 2011 Wis. Act 39 and July 25, 2011.

The requirements of notice given to newspapers under this section is discussed. 66 Atty. Gen. 230.

A town board, but not an annual town meeting, is a "governmental body" within the meaning of the open meetings law. 66 Atty. Gen. 237.

News media who have filed written requests for notices of public meetings cannot be charged fees by governmental bodies for communication of the notices. 77 Atty. Gen. 312.

A newspaper is not obligated to print a notice received under sub. (1) (b), nor is governmental body obligated to pay for publication. Martin v. Wray, 473 F. Supp. 1131 (1979).

19.85 Exemptions. (1) Any meeting of a governmental body, upon motion duly made and carried, may be convened in closed session under one or more of the exemptions provided in this section. The motion shall be carried by a majority vote in such manner that the vote of each member is ascertained and recorded in the minutes. No motion to convene in closed session may be adopted unless the chief presiding officer announces to those present at the meeting at which such motion is made, the nature of the business to be considered at such closed session, and the specific exemption or exemptions under this subsection by which such closed session is claimed to be authorized. Such announcement shall become part of the record of the meeting. No business may be taken up at any closed session except that which relates to matters contained in the chief presiding officer's announcement of the closed session. A closed session may be held for any of the following purposes:

(a) Deliberating concerning a case which was the subject of any judicial or quasi−judicial trial or hearing before that governmental body.

(b) Considering dismissal, demotion, licensing or discipline of any public employee or person licensed by a board or commission or the investigation of charges against such person, or considering the grant or denial of tenure for a university faculty member, and the taking of formal action on any such matter; provided that the faculty member or other public employee or person licensed is given actual notice of any evidentiary hearing which may be held prior to final action being taken and of any meeting at which final action may be taken. The notice shall contain a statement that the person has the right to demand that the evidentiary hearing or meeting be held in open session. This paragraph and par. (f) do not apply to any such evidentiary hearing or meeting where the employee or person licensed requests that an open session be held.

(c) Considering employment, promotion, compensation or performance evaluation data of any public employee over which the governmental body has jurisdiction or exercises responsibility.

(d) Except as provided in s. 304.06 (1) (eg) and by rule promulgated under s. 304.06 (1) (em), considering specific applications of probation, extended supervision or parole, or considering strategy for crime detection or prevention.

(e) Deliberating or negotiating the purchasing of public properties, the investing of public funds, or conducting other specified public business, whenever competitive or bargaining reasons require a closed session.

(ee) Deliberating by the council on unemployment insurance in a meeting at which all employer members of the council or all employee members of the council are excluded.

(eg) Deliberating by the council on worker's compensation in a meeting at which all employer members of the council or all employee members of the council are excluded.

(em) Deliberating under s. 157.70 if the location of a burial site, as defined in s. 157.70 (1) (b), is a subject of the deliberation and if discussing the location in public would be likely to result in disturbance of the burial site.

(f) Considering financial, medical, social or personal histories or disciplinary data of specific persons, preliminary consideration of specific personnel problems or the investigation of charges against specific persons except where par. (b) applies which, if discussed in public, would be likely to have a substantial adverse effect upon the reputation of any person referred to in such histories or data, or involved in such problems or investigations.

(g) Conferring with legal counsel for the governmental body who is rendering oral or written advice concerning strategy to be adopted by the body with respect to litigation in which it is or is likely to become involved.

(h) Consideration of requests for confidential written advice from the government accountability board under s. 5.05 (6a), or from any county or municipal ethics board under s. 19.59 (5).

(2) No governmental body may commence a meeting, subsequently convene in closed session and thereafter reconvene again in open session within 12 hours after completion of the closed session, unless public notice of such subsequent open session was given at the same time and in the same manner as the public notice of the meeting convened prior to the closed session.

(3) Nothing in this subchapter shall be construed to authorize a governmental body to consider at a meeting in closed session the final ratification or approval of a collective bargaining agreement under subch. I, IV, or V of ch. 111 which has been negotiated by such body or on its behalf.

History: 1975 c. 426; 1977 c. 260; 1983 a. 84; 1985 a. 316; 1987 a. 38, 305; 1989 a. 64; 1991 a. 39; 1993 a. 97, 215; 1995 a. 27; 1997 a. 39, 237, 283; 1999 a. 32; 2007 a. 1, 20; 2009 a. 28; 2011 a. 10, 32.

Although a meeting was properly closed, in order to refuse inspection of records of the meeting, the custodian was required by s. 19.35 (1) (a) to state specific and sufficient public policy reasons why the public interest in nondisclosure outweighed the public's right of inspection. Oshkosh Northwestern Co. v. Oshkosh Library Board, 125 Wis. 2d 480, 373 N.W.2d 459 (Ct. App. 1985).

The balance between protection of reputation under sub. (1) (f) and the public interest in openness is discussed. Wis. State Journal v. UW−Platteville, 160 Wis. 2d 31, 465 N.W.2d 266 (Ct. App. 1990). See also Pangman v. Stigler, 161 Wis. 2d 828, 468 N.W.2d 784 (Ct. App. 1991).

A "case" under sub. (1) (a) contemplates an adversarial proceeding. It does not connote the mere application for and granting of a permit. Hodge v. Turtle Lake, 180 Wis. 2d 62, 508 N.W.2d 603 (1993).

A closed session to discuss an employee's dismissal was properly held under sub. (1) (b) and did not require notice to the employee under sub. (1) (c) when no evidentiary hearing or final action took place in the closed session. State ex rel. Epping v. City of Neillsville, 218 Wis. 2d 516, 581 N.W.2d 548 (Ct. App. 1998), 97−0403.

The exception under sub. (1) (e) must be strictly construed. A private entity's desire for confidentiality does not permit a closed meeting. A governing body's belief that secret meetings will produce cost savings does not justify closing the door to public scrutiny. Providing contingencies allowing for future public input was insufficient. Because legitimate concerns were present for portions of some of the meetings does not mean the entirety of the meetings fell within the narrow exception under sub. (1) (e). Citizens for Responsible Development v. City of Milton, 2007 WI App 114, 300 Wis. 2d 649, 731 N.W.2d 640, 06−0427.

Section 19.35 (1) (a) does not mandate that, when a meeting is closed under this section, all records created for or presented at the meeting are exempt from disclosure. The court must still apply the balancing test articulated in *Linzmeyer*, 2002 WI 84, 254 Wis. 2d 306. Zellner v. Cedarburg School District, 2007 WI 53, 300 Wis. 2d 290, 731 N.W.2d 240, 06−1143.

Nothing in sub. (1) (e) suggests that a reason for going into closed session must be shared by each municipality participating in an intergovernmental body. It is not inconsistent with the open meetings law for a body to move into closed session under sub. (1) (e) when the bargaining position to be protected is not shared by every member of the body. Once a vote passes to go into closed session, the reason for requesting the vote becomes the reason of the entire body. Herro v. Village of McFarland, 2007 WI App 172, 303 Wis. 2d 749, 737 N.W.2d 55, 06−1929.

In allowing governmental bodies to conduct closed sessions in limited circumstances, this section does not create a blanket privilege shielding closed session contents from discovery. There is no implicit or explicit confidentiality mandate. A closed meeting is not synonymous with a meeting that, by definition, entails a privilege exempting its contents from discovery. Sands v. The Whitnall School District, 2008 WI 89, 312 Wis. 2d 1, 754 N.W.2d 439, 05−1026.

Boards of review cannot rely on the exemptions in sub. (1) to close any meeting in view of the explicit requirements in s. 70.47 (2m). 65 Atty. Gen. 162.

A university subunit may discuss promotions not relating to tenure, merit increases, and property purchase recommendations in closed session. 66 Atty. Gen. 60.

Neither sub. (1) (c) nor (f) authorizes a school board to make actual appointments of a new member in closed session. 74 Atty. Gen. 70.

A county board chairperson and committee are not authorized by sub. (1) (c) to meet in closed session to discuss appointments to county board committees. In appropriate circumstances, sub. (1) (f) would authorize closed sessions. 76 Atty. Gen. 276.

Sub. (1) (c) does not permit closed sessions to consider employment, compensation, promotion, or performance evaluation policies to be applied to a position of employment in general. 80 Atty. Gen. 176.

A governmental body may convene in closed session to formulate collective bargaining strategy, but sub. (3) requires that deliberations leading to ratification of a tentative agreement with a bargaining unit, as well as the ratification vote, must be held in open session. 81 Atty. Gen. 139.

Electronic reproduction of 2009−10 Wis. Stats. database, current through 2011 Wis. Act 39 and July 25, 2011.

"Evidentiary hearing" as used in s. 19.85 (1) (b), means a formal examination of accusations by receiving testimony or other forms of evidence that may be relevant to the dismissal, demotion, licensing, or discipline of any public employee or person covered by that section. A council that considered a mayor's accusations against an employee in closed session without giving the employee prior notice violated the requirement of actual notice to the employee. Campana v. City of Greenfield, 38 F. Supp. 2d 1043 (1999).

Closed Session, Open Book: Sifting the *Sands* Case. Bach. Wis. Law. Oct. 2009.

19.851 Closed sessions by government accountability board. The government accountability board shall hold each meeting of the board for the purpose of deliberating concerning an investigation of any violation of the law under the jurisdiction of the ethics and accountability division of the board in closed session under this section. Prior to convening under this section, the government accountability board shall vote to convene in closed session in the manner provided in s. 19.85 (1). No business may be conducted by the government accountability board at any closed session under this section except that which relates to the purposes of the session as authorized in this section or as authorized in s. 19.85 (1).

History: 2007 a. 1.

19.86 Notice of collective bargaining negotiations. Notwithstanding s. 19.82 (1), where notice has been given by either party to a collective bargaining agreement under subch. I, IV, or V of ch. 111 to reopen such agreement at its expiration date, the employer shall give notice of such contract reopening as provided in s. 19.84 (1) (b). If the employer is not a governmental body, notice shall be given by the employer's chief officer or such person's designee.

History: 1975 c. 426; 1987 a. 305; 1993 a. 215; 1995 a. 27; 2007 a. 20; 2009 a. 28; 2011 a. 10.

19.87 Legislative meetings. This subchapter shall apply to all meetings of the senate and assembly and the committees, subcommittees and other subunits thereof, except that:

(1) Section 19.84 shall not apply to any meeting of the legislature or a subunit thereof called solely for the purpose of scheduling business before the legislative body; or adopting resolutions of which the sole purpose is scheduling business before the senate or the assembly.

(2) No provision of this subchapter which conflicts with a rule of the senate or assembly or joint rule of the legislature shall apply to a meeting conducted in compliance with such rule.

(3) No provision of this subchapter shall apply to any partisan caucus of the senate or any partisan caucus of the assembly, except as provided by legislative rule.

(4) Meetings of the senate or assembly committee on organization under s. 71.78 (4) (c) or 77.61 (5) (b) 3. shall be closed to the public.

History: 1975 c. 426; 1977 c. 418; 1987 a. 312 s. 17.

Sub. (3) applied to a closed meeting of the members of one political party on a legislative committee to discuss a bill. State ex rel. Lynch v. Conta, 71 Wis. 2d 662, 239 N.W.2d 313 (1976).

19.88 Ballots, votes and records. (1) Unless otherwise specifically provided by statute, no secret ballot may be utilized to determine any election or other decision of a governmental body except the election of the officers of such body in any meeting.

(2) Except as provided in sub. (1) in the case of officers, any member of a governmental body may require that a vote be taken at any meeting in such manner that the vote of each member is ascertained and recorded.

(3) The motions and roll call votes of each meeting of a governmental body shall be recorded, preserved and open to public inspection to the extent prescribed in subch. II of ch. 19.

History: 1975 c. 426; 1981 c. 335 s. 26.

Under sub. (1), a common council may not vote to fill a vacancy on the common council by secret ballot. 65 Atty. Gen. 131.

19.89 Exclusion of members. No duly elected or appointed member of a governmental body may be excluded from any meeting of such body. Unless the rules of a governmental body provide to the contrary, no member of the body may be excluded from any meeting of a subunit of that governmental body.

History: 1975 c. 426.

19.90 Use of equipment in open session. Whenever a governmental body holds a meeting in open session, the body shall make a reasonable effort to accommodate any person desiring to record, film or photograph the meeting. This section does not permit recording, filming or photographing such a meeting in a manner that interferes with the conduct of the meeting or the rights of the participants.

History: 1977 c. 322.

19.96 Penalty. Any member of a governmental body who knowingly attends a meeting of such body held in violation of this subchapter, or who, in his or her official capacity, otherwise violates this subchapter by some act or omission shall forfeit without reimbursement not less than $25 nor more than $300 for each such violation. No member of a governmental body is liable under this subchapter on account of his or her attendance at a meeting held in violation of this subchapter if he or she makes or votes in favor of a motion to prevent the violation from occurring, or if, before the violation occurs, his or her votes on all relevant motions were inconsistent with all those circumstances which cause the violation.

History: 1975 c. 426.

The state need not prove specific intent to violate the Open Meetings Law. State v. Swanson, 92 Wis. 2d 310, 284 N.W.2d 655 (1979).

19.97 Enforcement. (1) This subchapter shall be enforced in the name and on behalf of the state by the attorney general or, upon the verified complaint of any person, by the district attorney of any county wherein a violation may occur. In actions brought by the attorney general, the court shall award any forfeiture recovered together with reasonable costs to the state; and in actions brought by the district attorney, the court shall award any forfeiture recovered together with reasonable costs to the county.

(2) In addition and supplementary to the remedy provided in s. 19.96, the attorney general or the district attorney may commence an action, separately or in conjunction with an action brought under s. 19.96, to obtain such other legal or equitable relief, including but not limited to mandamus, injunction or declaratory judgment, as may be appropriate under the circumstances.

(3) Any action taken at a meeting of a governmental body held in violation of this subchapter is voidable, upon action brought by the attorney general or the district attorney of the county wherein the violation occurred. However, any judgment declaring such action void shall not be entered unless the court finds, under the facts of the particular case, that the public interest in the enforcement of this subchapter outweighs any public interest which there may be in sustaining the validity of the action taken.

(4) If the district attorney refuses or otherwise fails to commence an action to enforce this subchapter within 20 days after receiving a verified complaint, the person making such complaint may bring an action under subs. (1) to (3) on his or her relation in the name, and on behalf, of the state. In such actions, the court may award actual and necessary costs of prosecution, including reasonable attorney fees to the relator if he or she prevails, but any forfeiture recovered shall be paid to the state.

(5) Sections 893.80 and 893.82 do not apply to actions commenced under this section.

History: 1975 c. 426; 1981 c. 289; 1995 a. 158.

Judicial Council Note, 1981: Reference in sub. (2) to a "writ" of mandamus has been removed because that remedy is now available in an ordinary action. See s. 781.01, stats., and the note thereto. [Bill 613−A]

Awards of attorney fees are to be at a rate applicable to private attorneys. A court may review the reasonableness of the hours and hourly rate charged, including the rates for similar services in the area, and may in addition consider the peculiar facts of the case and the responsible party's ability to pay. Hodge v. Town of Turtle Lake, 190 Wis. 2d 181, 526 N.W.2d 784 (Ct. App. 1994).

2009−10 Wis. Stats. database updated and current through 2011 Wis. Act 39 and July 25, 2011. Statutory changes effective on or prior to 9−1−11 are printed as if currently in effect. Statutory changes effective after 9−1−11 are designated by NOTES. See Are The Statutes on this Website Official?

Electronic reproduction of 2009−10 Wis. Stats. database, current through 2011 Wis. Act 39 and July 25, 2011.

Actions brought under the open meetings and open records laws are exempt form the notice provisions of s. 893.80 (1). Auchinleck v. Town of LaGrange, 200 Wis. 2d 585, 547 N.W.2d 587 (1996), 94−2809.

Failure to bring an action under this section on behalf of the state is fatal and deprives the court of competency to proceed. Fabyan v. Achtenhagen, 2002 WI App 214, 257 Wis. 2d. 310, 652 N.W.2d 649, 01−3298.

Complaints under the open meetings law are not brought in the individual capacity of the plaintiff but on behalf of the state, subject to the 2−year statue of limitations under s. 893.93 (2). Leung v. City of Lake Geneva, 2003 WI App 129, 265 Wis. 2d 674, 666 N.W.2d 104, 02−2747.

When a town board's action was voided by the court due to lack of statutory authority, an action for enforcement under sub. (4) by an individual as a private attorney general on behalf of the state against individual board members for a violation of the open meetings law that would subject the individual board members to civil forfeitures was not rendered moot. Lawton v. Town of Barton, 2005 WI App 16, 278 Wis. 2d 388, 692 N.W.2d 304, 04−0659

19.98 Interpretation by attorney general. Any person may request advice from the attorney general as to the applicability of this subchapter under any circumstances.

History: 1975 c. 426.

2009−10 Wis. Stats. database updated and current through 2011 Wis. Act 39 and July 25, 2011. Statutory changes effective on or prior to 9−1−11 are printed as if currently in effect. Statutory changes effective after 9−1−11 are designated by NOTES. See Are The Statutes on this Website Official?

Electronic reproduction of 2009−10 Wis. Stats. database, current through 2011 Wis. Act 39 and July 25, 2011.

CHAPTER 30

NAVIGABLE WATERS, HARBORS AND NAVIGATION

SUBCHAPTER I
GENERAL PROVISIONS

30.01 Definitions.
30.025 Permit procedure for utility facilities.
30.027 Lower Wisconsin State Riverway.
30.03 Enforcement of forfeitures; abatement of nuisances; infringement of public rights.
30.05 Applicability of chapter to municipally−owned submerged shorelands.
30.056 Exemption from certain permit requirements.
30.06 Waiver of certain provisions of this chapter.
30.07 Transportation of aquatic plants and animals; placement of objects in navigable waters.
30.10 Declarations of navigability.
30.103 Identification of ordinary high−water mark by town sanitary district.
30.105 Determining footage of shoreline.

SUBCHAPTER II
NAVIGABLE WATERS AND NAVIGATION IN GENERAL

30.11 Establishment of bulkhead lines.
30.12 Structures and deposits in navigable waters.
30.121 Regulation of boathouses and houseboats.
30.122 Unauthorized structures.
30.123 Bridges and culverts.
30.1235 Municipal bridge construction.
30.124 Waterfowl habitat management.
30.1255 Report on control of aquatic nuisance species.
30.126 Regulation of fishing rafts.
30.13 Regulation of wharves, piers and swimming rafts; establishment of pierhead lines.
30.131 Wharves and piers placed and maintained by persons other than riparian owners.
30.133 Prohibition against conveyance of riparian rights.
30.1335 Marina condominiums.
30.134 Use of exposed shore areas along streams.
30.135 Regulation of water ski platforms and jumps.
30.14 Reports of and hearings on violations.
30.15 Penalty for unlawful obstruction of navigable waters.
30.16 Removal of obstructions to navigation.
30.18 Withdrawal of water from lakes and streams.
30.19 Enlargement and protection of waterways.
30.195 Changing of stream courses.
30.196 Enclosure of navigable waters; issuance of permits to municipalities.
30.20 Removal of material from beds of navigable waters.
30.201 Financial assurance for nonmetallic mining.
30.202 Dredge disposal in and near the Mississippi, St. Croix and Black rivers by the U.S. corps of engineers.
30.2022 Activities of department of transportation.
30.2023 Seawalls; Wolf River and Fox River basins.
30.2025 Lake Koshkonong comprehensive project.
30.2026 Lake Belle View and Sugar River project.
30.203 Lake Winnebago comprehensive project.
30.2035 Shoreline protection study.
30.2037 Big Silver Lake high−water mark.
30.204 Lake acidification experiment.
30.205 Water resources development projects.
30.206 General permits.
30.2065 General permit for certain wetland restoration activities.
30.207 General permit pilot program.
30.208 Applications for individual permits and contracts; department determinations.
30.209 Contracts and individual permits; administrative and judicial review.
30.2095 Limits and conditions for permits and contracts.
30.21 Use of beds of Great Lakes by public utilities.
30.24 Bluff protection.
30.25 Wolf River protection.
30.255 Florence Wild Rivers Interpretive Center.
30.26 Wild rivers.
30.265 Adopt a river program.
30.27 Lower St. Croix River preservation.
30.275 Scenic urban waterways.
30.277 Urban rivers grant program.
30.28 Fees for permits, approvals, determinations and hearings.
30.285 Records of exemptions and permitted activities.
30.29 Operation of motor vehicles in waters prohibited.
30.291 Inspections for certain exemptions and permitted activities.
30.292 Parties to a violation.
30.294 Nuisances, abatement.
30.298 Penalties.

SUBCHAPTER III
DEVELOPMENT AND OPERATION OF HARBORS

30.30 Municipal authority to make harbor improvements.
30.31 Procedural and other requirements to be followed in making harbor improvements.
30.32 Contracts; competitive bidding; exceptions.
30.33 Harbor railway belt lines.
30.34 Financing harbor improvements and operations generally.
30.35 Financing harbor improvements through bonds or notes.
30.37 Boards of harbor commissioners authorized.
30.38 Powers and duties of boards of harbor commissioners.

SUBCHAPTER IV
LOWER WISCONSIN STATE RIVERWAY

30.40 Definitions.
30.41 Creation.
30.42 Departmental duties, powers, prohibitions.
30.43 Board duties.
30.435 Board powers.
30.44 Permits and waivers; board procedures.
30.443 Erosion prevention and control.
30.445 Piers.
30.45 Prohibited and restricted activities in the riverway.
30.452 Prohibited activities in the river.
30.455 Department of transportation activities.
30.46 Agricultural use.
30.47 Restrictions on recreational use.
30.48 Applicability.
30.49 Enforcement.

SUBCHAPTER V
REGULATION OF BOATING

30.50 Definitions.
30.501 Capacity plates on boats.
30.505 Certificate of number system to conform to federal system.
30.51 Certificate of number and registration; requirements; exemptions.
30.52 Certificate of number and registration; application; certification and registration period; fees; issuance.
30.523 Certification or registration card to be on board; display of decals and identification number.
30.525 Voluntary contributions for nonmotorized boats.
30.53 Certificate of origin; requirements; contents.
30.531 Certificate of title; requirements; exemptions.
30.533 Application for certificate of title; hull and engine identification numbers.
30.535 Department to examine records.
30.537 Certificate of title; issuance, records, fees.
30.539 Contents of certificate of title.
30.54 Lost, stolen or mutilated certificates.
30.541 Transfers of boat titles.
30.543 Report of stolen or abandoned boats.
30.544 Inspection of boats purchased out−of−state.
30.547 Alterations and falsifications prohibited.
30.549 Transfer of ownership of boats with a certificate of title, certificate of number or registration.
30.55 Notice of abandonment or destruction of boat or change of address.
30.553 Sharing boat title records.
30.57 Perfection of security interests.
30.571 Notification of person who has perfected security interest.
30.572 Duties on creation of security interest.
30.573 Assignment of security interest.
30.574 Release of security interest.
30.575 Secured party's and owner's duties.
30.576 Method of perfecting exclusive.
30.577 Suspension or revocation of certificate of title.
30.578 Grounds for refusing issuance of certificate of title.
30.60 Classification of motorboats.
30.61 Lighting equipment.
30.62 Other equipment.
30.625 Rental of motorboats.
30.63 Sale and use of certain outboard motors restricted.
30.635 Motorboat prohibition.
30.64 Patrol boats.
30.65 Traffic rules.
30.66 Speed restrictions.
30.67 Accidents and accident reports.
30.675 Distress signal flag.
30.678 Boating safety certificates; requirements; exemptions; operation by minors.
30.68 Prohibited operation.
30.681 Intoxicated boating.
30.682 Preliminary breath screening test.

30.683 Implied consent.
30.684 Chemical tests.
30.686 Report arrest to department.
30.687 Officer's action after arrest for violating intoxicated boating law.
30.69 Water skiing.
30.70 Skin diving.
30.71 Disposal of waste from boats equipped with toilets.
30.72 Watercraft use rules, Lower St. Croix River.
30.73 Use regulations, Brule River.
30.74 Additional functions of department.
30.742 Water exhibitions and races; rules.
30.745 Limited jurisdiction for administration and enforcement of navigation aids by municipalities.
30.75 Service of process on nonresident.
30.77 Local regulation of boating.
30.772 Placement and use of moorings; restrictions; permits.
30.773 Designated mooring areas.
30.78 Local regulation of seaplanes.
30.79 Local water safety patrols; state aids.
30.80 Penalties.
30.81 Local regulations on icebound inland waters.
30.90 Public access to Lake Lions.
30.92 Recreational boating projects.
30.99 Parties to a violation.

SUBCHAPTER I

GENERAL PROVISIONS

30.01 Definitions. In this chapter:

(1am) "Area of special natural resource interest" means any of the following:

(a) A state natural area designated or dedicated under ss. 23.27 to 23.29.

(b) A surface water identified as a trout stream by the department.

(bm) A surface water identified as an outstanding or exceptional resource water under s. 281.15.

(c) An area that possesses significant scientific value, as identified by the department.

(1b) "Authorized base level of water loss" has the meaning given under s. 281.35 (1) (b).

(1c) "Boat shelter" means a structure in navigable waters designed and constructed for the purpose of providing cover for a berth place for watercraft, which has a roof but does not have walls or sides. Such a structure may include a device for lifting a boat.

(1d) "Boathouse" means a structure used for the storage of watercraft and associated materials which has one or more walls or sides.

(1g) "Bridge" means a structure used to convey people, animals and vehicles over navigable waters and includes pipe arches and culverts.

(1j) "Department" means the department of natural resources.

(1m) "Designated mooring area" means a mooring area designated by a municipality under s. 30.773 (2) and (3), approved by the department and marked as a mooring area.

(1n) "Drain" has the meaning given in s. 88.01 (8).

(1nm) "Duck Creek Drainage District" means Outagamie Drainage District No. 6 that is also known as the Duck Creek Drainage District and is located in Outagamie County.

(1p) "Fishing raft" means any raft, float or structure, including a raft or float with a superstructure and including a structure located or extending below or beyond the ordinary high−water mark of a water, which is designed to be used or is normally used for fishing, which is not normally used as a means of transportation on water and which is normally retained in place by means of a permanent or semipermanent attachment to the shore or to the bed of the waterway. "Fishing raft" does not include a boathouse or fixed houseboat regulated under s. 30.121 nor a wharf or pier regulated under ss. 30.12 and 30.13.

(1r) "Fixed houseboat" means a structure not actually used for navigation which extends beyond the ordinary high−water mark of a navigable waterway and is retained in place either by cables to the shoreline or by anchors or spudpoles attached to the bed of the waterway.

(1t) "Flotation device" means any device used to provide flotation for a fishing raft, including each individual barrel or styrofoam coffin.

(2) "Governing body" means a town board, a village board of trustees, a city council or a county board.

(2m) "Great Lakes water body" means Lake Superior or Lake Michigan and includes any bay or harbor that is part of Lake Superior or Lake Michigan.

(3) "Harbor facility" means every facility useful in the maintenance or operation of a harbor, including transportation facilities of all types, terminal and storage facilities of all types, wharves, piers, slips, basins, ferries, docks, bulkheads and dock walls, and floating and handling equipment, power stations, transmission lines and other facilities necessary for the maintenance and operation of such harbor facilities.

(3e) "Mooring" when used as a noun means a mooring anchor and mooring buoy together with attached chains, cables, ropes and pennants and related equipment, unless the term is qualified or restricted.

(3m) "Mooring anchor" means any anchor or weight which is designed to rest on the bed or to be buried in the bed of a navigable water, which is designed to be attached by a chain, cable, rope or other mechanism to a mooring buoy and which is designed to be left in position permanently or on a seasonal basis.

(3s) "Mooring buoy" means any float or marker which is attached to a mooring anchor and either is suitable for attachment to a boat through the use of a pennant or other device or facilitates the attachment of the boat to the mooring anchor.

(3w) "Motor vehicle" has the meaning designated under s. 340.01 (35) except that this term does not include snowmobiles.

(4) "Municipality" means any town, village, city or county in this state.

(4m) "Navigable waters" or "navigable waterway" means any body of water which is navigable under the laws of this state.

(4r) "Outlying waters" has the meaning given in s. 29.001 (63).

(5) "Pier" means any structure extending into navigable waters from the shore with water on both sides, built or maintained for the purpose of providing a berth for watercraft or for loading or unloading cargo or passengers onto or from watercraft. Such a structure may include a boat shelter which is removed seasonally. Such a structure may include a boat hoist or boat lift, and the hoist or lift may be permanent or may be removed seasonally.

(5m) "Piling" means a group of piles.

(6) "Secretary" means the secretary of natural resources.

(6d) "Surplus water" means any water of a stream that is not being beneficially used, as determined by the department.

(6e) "Swimming raft" means a floating platform without railings, roof or walls that is adequately anchored to the bed of navigable waters and is designed for swimming, diving and related activities.

(7) "Watercraft" means any device used and designed for navigation on water.

(7m) "Water loss" has the meaning given under s. 281.35 (1) (L).

(8) "Wharf" means any structure in navigable waters extending along the shore and generally connected with the uplands throughout its length, built or maintained for the purpose of pro-

Electronic reproduction of 2009−10 Wis. Stats. database, current through 2011 Wis. Act 39 and July 25, 2011.

viding a berth for watercraft or for loading or unloading cargo or passengers onto or from watercraft. Such a structure may include a boat hoist or boat lift, and the hoist or lift may be permanent or may be removed seasonally.

(9) "Withdrawal" has the meaning given under s. 281.35 (1) (m).

(10) "Wolf River municipality" means any city, village or town which adjoins or includes any part of the Wolf River or its stream tributaries from the Shawano dam downstream to Lake Poygan.

History: 1983 a. 189; 1985 a. 243, 332; 1987 a. 374 ss. 1 to 9, 25, 34, 35, 46 to 49, 70, 76; 1987 a. 403; 1989 a. 56; 1993 a. 236; 1995 a. 227; 1997 a. 27, 248; 1999 a. 9; 2003 a. 118.

No threshold showing that a waterway is actually navigated for commercial or recreational purposes is necessary in order to prove that the waterway is navigable. City of Oak Creek v. DNR, 185 Wis. 2d 424, 518 N.W.2d 276 (Ct. App. 1994).

30.025 Permit procedure for utility facilities. (1b) DEFINITIONS. In this section:

(a) "Commission" means the public service commission.

(b) "Permit" means an individual permit, a general permit, an approval, or a contract required under this subchapter or subch. II, a permit or an approval required under ch. 31, a storm water discharge permit required under s. 283.33 (1) (a), or a water quality certification required under s. 281.36 or under rules promulgated under subch. II of ch. 281 to implement 33 USC 1341 (a).

(c) "Utility facility" means a project, as defined in s. 196.49 (3) (a), or a facility, as defined in s. 196.491 (1) (e).

(1e) APPLICABILITY. (a) Except as provided in par. (b), this section applies to a proposal to construct a utility facility if the utility facility is required to obtain, or give notification of the wish to proceed under, one or more permits.

(b) This section does not apply to a proposal to construct a utility facility if the only permit that the utility facility is required to obtain from the department is a storm water discharge permit under s. 283.33 (1) (a).

(1m) PREAPPLICATION PROCESS. Before filing an application under this section, a person proposing to construct a utility facility shall notify the department of the intention to file an application. After receiving such notice, the department shall confer with the person, in cooperation with the commission, to make a preliminary assessment of the project's scope, to make an analysis of alternatives, to identify potential interested persons, and to ensure that the person making the proposal is aware of all of the following:

(a) The permits that the person may be required to obtain and the permits under which the person must give notification of the wish to proceed.

(b) The information that the person will be required to provide.

(c) The timing of information submissions that the person will be required to provide in order to enable the department to participate in commission review procedures and to process the application in a timely manner.

(1s) APPLICATION FOR PERMITS. (a) Any person proposing to construct a utility facility to which this section applies shall, in lieu of separate application for permits, submit one application for permits together with any additional information required by the department. The application shall be filed with the department at the same time that an application for a certificate is filed with the commission under s. 196.49 or in a manner consistent with s. 196.491 (3) and shall include the detailed information that the department requires to determine whether an application is complete and to carry out its obligations under sub. (4). The department may require supplemental information to be furnished thereafter.

(b) A person who applies to the commission for a certificate under s. 196.49 or 196.491 (3) is eligible to apply under par. (a) for any permit that the utility facility may require and to receive such permit.

(2) HEARING. Once the applicant meets the requirements of sub. (1s) (a), the department may schedule the matter for a public hearing. Notice of the hearing shall be given to the applicant and shall be published as a class 1 notice under ch. 985. The department may give such further notice as it deems proper, and shall give notice to persons requesting same. One copy of the application shall be available for public inspection at the office of the department, at least one copy in the regional office of the department, and at least one copy at the main public library, of the area affected. Notwithstanding s. 227.42, the hearing shall be an informational hearing and may not be treated as a contested case hearing nor converted to a contested case hearing.

(2g) PARTICIPATION IN COMMISSION PROCEEDINGS. (a) The department shall review every proposed utility facility subject to this section, including each location, site, or route proposed for the utility facility, to assess whether each proposed location, site, or route can meet the criteria for proceeding under the authority of or obtaining the required permits, and shall provide that information to the commission.

(b) The department shall participate in commission investigations or proceedings under s. 196.49 or 196.491 (3) with regard to any proposed utility facility that is subject to this section. In order to ensure that the commission's decision is consistent with the department's responsibilities, the department shall provide the commission with information that is relevant to only the following:

1. Environmental issues that concern the proposed utility facility.

2. Public rights in navigable waters that may be affected by the proposed utility facility.

3. Location, site, or route issues concerning the proposed utility facility, including alternative locations, sites, or routes.

(2s) CONSIDERATION OF ALTERNATIVES. (a) The department shall treat the commission's decision under s. 196.49 or 196.491 (3) as concluding that there is no practicable alternative for the utility facility if all of the following apply:

1. The department has participated in the commission's investigations or proceedings under sub. (2g).

2. The commission's decision under s. 196.49 or 196.491 (3) is consistent with the department's assessment and information under sub. (2g) considering those factors required to be considered by the commission under s. 196.49 or 196.491 (3).

(b) If par. (a) applies, the department may not require the applicant for the proposed utility facility to undertake further analysis of any utility facility alternatives, including an analysis of alternative methods of meeting the need for the project or alternative locations, sites, or routes in order to satisfy the criteria under sub. (3). The department may identify adjustments that may be required to address permitting issues within the location, site, or route approved by the commission under s. 196.49 or 196.491 (3).

(3) PERMIT ISSUANCE. The department shall issue, or authorize proceeding under, the necessary permits if it finds that the applicant has shown that the proposal:

(a) Complies with environmental statutes administered by the department and rules promulgated thereunder, and federal environmental standards which the department has authority to enforce.

(b) Does not unduly affect:

1. Public rights and interests in navigable waterways;

2. The effective flood flow capacity of a stream;

3. The rights of other riparian owners; or

4. Water quality.

(3m) ENVIRONMENTAL ASSESSMENTS FOR CERTAIN PROJECTS. The department is not required to prepare an environmental impact statement under s. 1.11 (2) (c) for the construction of a project that is specified in s. 196.491 (4) (c) 1m. or 1s. and for which one or more permits are required, but shall prepare an envi-

Electronic reproduction of 2009−10 Wis. Stats. database, current through 2011 Wis. Act 39 and July 25, 2011.

ronmental assessment regarding the construction if the department's rules require an environmental assessment.

(4) PERMIT CONDITIONS. The permit may be issued, or the authority to proceed under a permit may be granted, upon stated conditions deemed necessary to assure compliance with the criteria designated under sub. (3). The department shall grant or deny the application for a permit for the utility facility within 30 days of the date on which the commission issues its decision under s. 196.49 or 196.491 (3).

(5) EXEMPTION FROM CERTAIN PROCEDURES. Sections 30.208 and 30.209 do not apply to an application for any permit under this section.

History: 1975 c. 68; 1985 a. 332 s. 251 (1); 1997 a. 204; 2003 a. 89, 118; 2009 a. 378, 379.

30.027 Lower Wisconsin State Riverway. For activities in the Lower Wisconsin State Riverway, as defined in s. 30.40 (15), no person obtaining a permit under subchs. I, II or V may start or engage in the activity for which the permit was issued unless the person obtains any permit that is required for the activity under s. 30.44 or 30.445.

History: 1989 a. 31.

30.03 Enforcement of forfeitures; abatement of nuisances; infringement of public rights. (2) The district attorney of the appropriate county or, at the request of the department, the attorney general shall institute proceedings to recover any forfeiture imposed or to abate any nuisance committed under this chapter or ch. 31.

(3) All forfeitures shall be recovered by civil action as provided in ch. 778 and when collected shall be paid directly into the state treasury.

(4) (a) If the department learns of a possible violation of the statutes relating to navigable waters or a possible infringement of the public rights relating to navigable waters, and the department determines that the public interest may not be adequately served by imposition of a penalty or forfeiture, the department may proceed as provided in this paragraph, either in lieu of or in addition to any other relief provided by law. The department may order a hearing under ch. 227 concerning the possible violation or infringement, and may request the hearing examiner to issue an order directing the responsible parties to perform or refrain from performing acts in order to fully protect the interests of the public in the navigable waters. If any person fails or neglects to obey an order, the department may request the attorney general to institute proceedings for the enforcement of the department's order in the name of the state. The proceedings shall be brought in the manner and with the effect of proceedings under s. 111.07 (7).

(am) In determining an appropriate remedy for a violation under this chapter relating to a pier or wharf, the department may not order the removal of a pier or wharf unless the department considers all reasonable alternatives offered by the department and the owner of the pier or wharf relating to the location, design, construction, and installation of the pier or wharf.

(b) No penalty may be imposed for violation of a hearing examiner's order under this subsection, but violation of a judgment enforcing the order may be punished in civil contempt proceedings.

History: 1979 c. 32 s. 92 (8); 1979 c. 257; 1981 c. 390; 1983 a. 524; 1987 a. 374; 2007 a. 204.

Under sub. (4), the DNR has jurisdiction to pursue any "possible violation" of the public trust doctrine as embodied in ch. 30. ABKA Limited Partnership v. DNR, 2002 WI 106, 255 Wis. 2d 486, 648 N.W.2d 854, 99−2306.

The DNR has a statutory duty under sub. (4) (a) to proceed against piers it believes to be in violation of ch. 30 or contrary to the public's rights in the waters of the state. No administrative rule limits DNR's statutory enforcement authority, nor could it do so. Baer v. Wisconsin DNR, 2006 WI App 225, 297 Wis. 2d 232, 724 N.W.2d 638, 05−0668.

Because the plain language of the procedural statutes governing ch. 30 forfeiture actions allows for summary judgment, and because these statutes are consistent with summary judgment methodology, summary judgment is available in a ch. 30 forfeiture action. State v. Ryan, 2011 WI App 21, ___ Wis. 2d ___, ___ N.W.2d ___, 09−3075.

The DNR may enforce the terms of lakebed grants under sub. (4) (a) as long as the enforcement does not conflict with s. 30.05. 78 Atty. Gen. 107.

30.05 Applicability of chapter to municipally−owned submerged shorelands. Nothing in this chapter relative to the establishment of bulkhead or pierhead lines or the placing of structures or deposits in navigable waters or the removal of materials from the beds of navigable waters is applicable to submerged shorelands in Lake Michigan, the title to which has been granted by the state to a municipality.

30.056 Exemption from certain permit requirements. Notwithstanding ss. 30.12, 30.19, 30.195 and 30.294, the city of Oak Creek may not be required to remove any structure or concrete or other deposit that was placed in Crayfish Creek in the city of Oak Creek before June 1, 1991, and may continue to maintain the structure, concrete or deposit without having a permit or other approval from the department.

History: 1995 a. 455.

30.06 Waiver of certain provisions of this chapter. The department, by rule, may waive the applicability to specified navigable waters of the United States of all or part of those provisions of this chapter which relate to the establishment of bulkhead or pierhead lines or the placing of structures or deposits in navigable waters or the removal of materials from the beds of navigable waters. The department may promulgate such rule only after it has entered into an agreement with the appropriate federal agency wherein it is agreed that the comparable federal law will be enforced on the waters in question in lieu of the state law which is being waived. The objective of such agreement shall be to avoid duplication of administration with respect to navigable waters over which this state and the U.S. government have concurrent jurisdiction, in those situations wherein administration by a single governmental agency will tend to avoid confusion and the necessity of obtaining permits from both the state and federal governments by those who are subject to the law and at the same time will adequately protect the public interest. The agreement may contain such further provisions as are designed to achieve this objective.

History: 1981 c. 390 s. 252; 1985 a. 332 s. 251 (1).

30.07 Transportation of aquatic plants and animals; placement of objects in navigable waters. (1) In this section:

(a) "Aquatic animal" means any animal that lives or grows only in water during any life state and includes that animal's eggs, larvae, or young.

(b) "Aquatic plant" means a submergent, emergent, floating−leaf, or free−floating plant or any part thereof. "Aquatic plant" does not mean wild rice.

(c) "Highway" has the meaning given in s. 340.01 (22), except that it does not include public boat access sites or parking areas for public boat access sites.

(d) "Law enforcement officer" has the meaning given in s. 30.50 (4s).

(e) "Local governmental unit" means a city, village, town, or county; a special purpose district in this state; an agency or corporation of a city, village, town, county, or special purpose district; or a combination or subunit of any of the foregoing.

(f) "Public boat access site" means a site that provides access to a navigable water for boats and that is open to the general public for free or for a charge or that is open only to certain groups of persons for a charge.

(g) "Vehicle" has the meaning given in s. 340.01 (74).

(2) (a) No person may place or operate a vehicle, seaplane, watercraft, or other object of any kind in a navigable water if it has any aquatic plants or aquatic animals attached to the exterior of the vehicle, seaplane, watercraft, or other object. This paragraph does not require a person to remove aquatic plants or aquatic animals from a vehicle, seaplane, watercraft, or other object during the

Electronic reproduction of 2009−10 Wis. Stats. database, current through 2011 Wis. Act 39 and July 25, 2011.

period of time when the vehicle, seaplane, watercraft, or other object is being operated in the same navigable body of water in which the aquatic plants or aquatic animals became attached.

(b) No person may take off with a seaplane, or transport or operate a vehicle, watercraft, or other object of any kind on a highway with aquatic plants or aquatic animals attached to the exterior of the seaplane, vehicle, watercraft, or other object.

(3) A law enforcement officer who has reason to believe that a person is in violation of sub. (2) may order the person to do any of the following:

(a) Remove aquatic plants or aquatic animals from a vehicle, seaplane, watercraft, or other object of any kind before placing it in a navigable water.

(b) Remove aquatic plants or aquatic animals from a seaplane before taking off with the seaplane.

(c) Remove from, or not place in, a navigable water, a vehicle, seaplane, watercraft, or other object of any kind.

(d) Not take off with a seaplane, or transport or operate a vehicle, watercraft, or other object of any kind on a highway.

(4) Subsection (2) does not prohibit a person from doing any of the following:

(am) Transporting or operating commercial aquatic plant harvesting equipment that has aquatic plants or animals attached to the exterior of the equipment if the equipment is owned or operated by a local governmental unit, if the equipment is being transported or operated for the purpose of cleaning the equipment to remove aquatic plants or animals, and if the person transports the equipment to, or operates the equipment at, a suitable location away from any body of water.

(b) Transporting or operating a vehicle, seaplane, watercraft, or other object of any kind with duckweed that is incidentally attached to the exterior of the vehicle, seaplane, watercraft, or other object.

(5) (a) The department shall prepare a notice that contains a summary of the provisions under this section and shall make copies of the notice available to owners required to post the notice under par. (b).

(b) Each owner of a public boat access site shall post and maintain the notice described in par. (a).

(6) No person may refuse to obey the order of a law enforcement officer who is acting under sub. (3).

History: 2009 a. 55 ss. 9, 13, 14.

30.10 Declarations of navigability. (1) LAKES. All lakes wholly or partly within this state which are navigable in fact are declared to be navigable and public waters, and all persons have the same rights therein and thereto as they have in and to any other navigable or public waters.

(2) STREAMS. Except as provided under sub. (4) (c) and (d), all streams, sloughs, bayous and marsh outlets, which are navigable in fact for any purpose whatsoever, are declared navigable to the extent that no dam, bridge or other obstruction shall be made in or over the same without the permission of the state.

(3) ENLARGEMENTS OR IMPROVEMENTS IN NAVIGABLE WATERS. All inner harbors, turning basins, waterways, slips and canals created by any municipality to be used by the public for purposes of navigation, and all outer harbors connecting interior navigation with lake navigation, are declared navigable waters and are subject to the same control and regulation that navigable streams are subjected to as regards improvement, use and bridging.

(4) INTERPRETATION. (a) This section does not impair the powers granted by law under s. 30.1235 or by other law to municipalities to construct highway bridges, arches, or culverts over streams.

(b) The boundaries of lands adjoining waters and the rights of the state and of individuals with respect to all such lands and waters shall be determined in conformity to the common law so far as applicable, but in the case of a lake or stream erroneously meandered in the original U.S. government survey, the owner of title to lands adjoining the meandered lake or stream, as shown on such original survey, is conclusively presumed to own to the actual shorelines unless it is first established in a suit in equity, brought by the U.S. government for that purpose, that the government was in fact defrauded by such survey. If the proper claims of adjacent owners of riparian lots of lands between meander and actual shorelines conflict, each shall have his or her proportion of such shorelands.

(c) Notwithstanding any other provision of law, farm drainage ditches are not navigable within the meaning of this section unless it is shown that the ditches were navigable streams before ditching. For purposes of this paragraph, "farm drainage ditch" means any artificial channel which drains water from lands which are used for agricultural purposes.

(d) A drainage district drain located in the Duck Creek Drainage District and operated by the board for that district is not navigable unless it is shown, by means of a U.S. geological survey map or other similarly reliable scientific evidence, that the drain was a navigable stream before it became a drainage district drain.

History: 1977 c. 190, 272, 418; 1981 c. 339; 1991 a. 316; 1999 a. 9; 2003 a. 118.

Cross−reference: See also chs. NR 305 and 320, Wis. adm. code.

When there are 2 owners of land adjacent to a disputed parcel erroneously meandered under sub. (4), the judge is to divide the parcel proportionately on an equitable, but not necessarily equal, basis. Kind v. Vilas County, 56 Wis. 2d 269, 201 N.W.2d 881 (1972).

The DNR properly considered the existence of beaver dams and ponds and the periods of high water caused by spring runoffs in determining the navigability of a creek. The dams and ponds were normal and natural to the stream, and the periods of high water were of a regularly recurring, annual nature. DeGayner & Co. v. DNR, 70 Wis. 2d 936, 236 N.W.2d 217 (1975).

An owner of land on a meandered lake takes only to the actual shoreline. An owner does not have a "proper claim" to an isolated parcel separated from the remainder of the lot by the lake, making sub. (4) (b) inapplicable as parcels separated by a lake are not "adjacent." State Commissioners of Board of Public Lands v. Thiel, 82 Wis. 2d 276, 262 N.W.2d 522 (1978).

A DNR declaration of navigability subjecting private property to sub. (1) was a taking. Zinn v. State, 112 Wis. 2d 417, 334 N.W.2d 67 (1983).

The DNR has the authority, as well as the obligation, to determine whether the waters of the state are navigable in fact and subject to regulation under ch. 30, another agency's prior ancillary finding to the contrary notwithstanding. Turkow v. DNR, 216 Wis. 2d 273, 576 N.W.2d 288 (Ct. App. 1998), 97−1149.

This chapter applies to navigable ditches that were originally navigable streams. If a navigable ditch was originally nonnavigable or had no previous stream history, the DNR's jurisdiction depends upon the facts of the situation. 63 Atty. Gen. 493.

Erroneously meandered lakeshore − the status of the law as it affects title and distribution. 61 MLR 515.

The Muench case: A better test of navigability. Edwards, 1957 WLR 486.

Riparian Landowners Versus the Public: The Importance of Roads and Highways for Public Access to Wisconsin's Navigable Waters. Williams. 2010 WLR 186.

30.103 Identification of ordinary high−water mark by town sanitary district. A town sanitary district may identify the ordinary high−water mark of a lake that lies wholly within unincorporated territory and wholly within the town sanitary district. The department may not identify an ordinary high−water mark of a lake that is different than the ordinary high−water mark identified by a town sanitary district under this section.

History: 1997 a. 237.

30.105 Determining footage of shoreline. In determining footage of shoreline for purposes of s. 30.50 (4q), 30.77 (3) (ac), (ae) and (am) and 60.782 (2), towns, villages, cities, public inland lake protection and rehabilitation districts and town sanitary districts shall measure by use of a map wheel on the U.S. geological survey 7 1/2 minute series map.

History: 1995 a. 152 s. 9; 1995 a. 349 s. 11.

SUBCHAPTER II

NAVIGABLE WATERS AND NAVIGATION IN GENERAL

30.11 Establishment of bulkhead lines. (1) WHO MAY ESTABLISH. Any municipality may, subject to the approval of the department, by ordinance establish a bulkhead line and from time to time reestablish the same along any section of the shore of any navigable waters within its boundaries.

Electronic reproduction of 2009−10 Wis. Stats. database, current through 2011 Wis. Act 39 and July 25, 2011.

(2) STANDARDS FOR ESTABLISHING. Bulkhead lines shall be established in the public interest and shall conform as nearly as practicable to the existing shores, except that in the case of leases under sub. (5) and s. 24.39 (4) bulkhead lines may be approved farther from the existing shoreline if they are consistent with and a part of any lease executed by the board of commissioners of public lands.

(3) HOW ESTABLISHED. Whenever any municipality proposes to establish a bulkhead line or to reestablish an existing bulkhead line, the municipality shall indicate both the existing shore and the proposed bulkhead line upon a map and shall file with the department for its approval 6 copies of the map and 6 copies of the ordinance establishing the bulkhead line. The map shall use a scale of not less than 100 feet to an inch or any other scale required by the department. The map and a metes and bounds description of the bulkhead line shall be prepared by a land surveyor registered in this state. The department may require the installation of permanent reference markers to the bulkhead line. Upon approval by the department, the municipality shall deliver the map, description and ordinance to the office of the register of deeds of the county in which the bulkhead line lies, to be recorded by the register of deeds.

(4) RIPARIAN RIGHTS PRESERVED. Establishment of a bulkhead line shall not abridge the riparian rights of riparian owners. Riparian owners may place solid structures or fill up to such line.

(5) FINDING OF PUBLIC INTEREST. (a) Prior to the execution of any lease by the board of commissioners of public lands concerning rights to submerged lands or rights to fill in submerged lands held in trust for the public under s. 24.39, the department shall determine whether the proposed physical changes in the area as a result of the execution of the lease are consistent with the public interest. Thirty days before making its determination, the department shall notify, in writing, the clerk of the county and clerk of the city, village or town in which the changes are proposed and the U.S. Army Corps of Engineers of the application for the lease. In making its finding the department shall give consideration to all reports submitted to it. The department shall not approve a lease applied for under s. 24.39 (4) (a) 2. if the department determines that the lease may threaten excessive destruction of wildlife habitat.

(b) When considering leases to allow certain initial improvements such as, but not restricted to, filling on submerged lands to create sites for further facilities, the department may determine whether such initial improvements are consistent with the public interest in the navigable waters involved even though the exact final use to which these improvements will be put is not known. The department, at the time it finds that a proposed lease would be consistent with the public interest in the navigable waters involved, may include in its findings such limitations upon the use of improvements as it considers necessary to confine their use to functions primarily related to water transportation or otherwise of public benefit. The board of commissioners of public lands shall include in the lease such limitations on final use as is determined by the department.

(c) Upon the complaint of any person to the department that current use made of rights leased under s. 24.39 (4) is inconsistent with both its original findings and the public interest, the department shall hold a public hearing thereon after the publication of a class 2 notice, under ch. 985. If the department finds that the present use conforms neither to its original finding nor to the present public interest, it shall submit its findings to the governor. The governor may cause the attorney general or the district attorney of the proper county to bring action in the name of the state in a court of competent jurisdiction to declare the lease terminated and to institute appropriate action for removal of structures or cessation of practices in violation of such lease.

(6) SHORELINE NOT INVALIDATED. A shoreline lawfully established before January 1, 1960, is a lawfully established bulkhead line.

History: 1987 a. 374; 1991 a. 32; 2003 a. 118.

A bulkhead line is not merely the natural shoreline, but one legislatively established by a municipality. It may differ from the existing shoreline and is also distinguishable from the low− and high−water marks previously judicially defined. State v. McFarren, 62 Wis. 2d 492, 215 N.W.2d 459 (1974).

The private right to fill lakebeds granted under this section does not preempt the zoning power of a county over shorelands under s. 59.971 [now 59.692]. State v. Land Concepts, Ltd. 177 Wis. 2d 24, 501 N.W.2d 817 (Ct. App. 1993).

When a bulkhead line has been established, a riparian owner must nonetheless obtain a permit or contract pursuant to s. 30.20 prior to removing material from the bed of a navigable water landward of the bulkhead line, but within the original ordinary high water mark. 63 Atty. Gen. 445.

A bulkhead line is not legally established until the filing requirements of sub. (3) are met. A bulkhead line established by a town on lands subsequently annexed to a municipality that has not established such line, remains in effect. 64 Atty. Gen. 112.

30.12 Structures and deposits in navigable waters.

(1) PERMITS REQUIRED. Unless an individual or a general permit has been issued under this section or authorization has been granted by the legislature, no person may do any of the following:

(a) Deposit any material or place any structure upon the bed of any navigable water where no bulkhead line has been established.

(b) Deposit any material or place any structure upon the bed of any navigable water beyond a lawfully established bulkhead line.

(1g) EXEMPTIONS. A riparian owner is exempt from the permit requirements under this section for the placement of a structure or the deposit of material if the structure or material is located in an area other than an area of special natural resource interest, does not interfere with the riparian rights of other riparian owners, and is any of the following:

(a) A deposit of sand, gravel, or stone that totals less than 2 cubic yards and that is associated with any activity or project that is exempt from an individual permit or a general permit under this subchapter.

(b) A structure, other than a pier or a wharf, that is placed on a seasonal basis in accordance with rules promulgated by the department.

(c) A fish crib, spawning reef, wing deflector, or similar device that is placed on the bed of navigable waters for the purpose of improving fish habitat.

(d) A bird nesting platform, wood duck house, or similar structure that is placed on the bed of a navigable water for the purpose of improving wildlife habitat.

(e) A boat shelter, boat hoist, or boat lift that is placed on a seasonal basis adjacent to the riparian owner's pier or wharf or to the shoreline on the riparian owner's property, in accordance with rules promulgated by the department.

(f) A pier or wharf that is no more than 6 feet wide, that extends no further than to a point where the water is 3 feet at its maximum depth, or to the point where there is adequate depth for mooring a boat or using a boat hoist or boat lift, whichever is farther from the shoreline, and that has no more than 2 boat slips for the first 50 feet of riparian owner's shoreline footage and no more than one additional boat slip for each additional 50 feet of the riparian owner's shoreline. Notwithstanding the width limitation in this paragraph, a pier may have an area as a loading platform that is more than 6 feet wide if the platform is not more than 8 feet wide, it extends perpendicular to one or both sides of the pier, and it is located at the lakeward end of the pier or at the end of the pier that extends into a stream.

(g) An intake structure and pipe that is placed on the bed of a navigable water for the purpose of constructing a dry fire hydrant to supply water for fire protection.

2009−10 Wis. Stats. database updated and current through 2011 Wis. Act 39 and July 25, 2011. Statutory changes effective on or prior to 9−1−11 are printed as if currently in effect. Statutory changes effective after 9−1−11 are designated by NOTES. See Are The Statutes on this Website Official?

Electronic reproduction of 2009−10 Wis. Stats. database, current through 2011 Wis. Act 39 and July 25, 2011.

(h) A piling that is driven into the bed of a navigable water adjacent to the owner's property for the purpose of deflecting ice, protecting an existing or proposed structure, or providing a pivot point for turning watercraft.

(i) Riprap in an amount not to exceed 100 linear feet that is placed to replace existing riprap located in an inland lake or Great Lakes water body and that includes the replacement of filter fabric or base substrate.

(j) Riprap in an amount not to exceed 300 linear feet that is placed to repair existing riprap located in an inland lake or Great Lakes water body, and that consists only of the placement of additional rock or the redistribution of existing rock within the footprint of the existing riprap.

(k) A biological shore erosion control structure, as defined by rule by the department.

(km) An intake or outfall structure that is less than 6 feet from the water side of the ordinary high−water mark and that is less than 25 percent of the width of the channel in which it is placed.

(1j) BOAT SLIPS FOR CERTAIN PIERS AND WHARVES. (a) Subject to pars. (b) and (c), the riparian owner or owners of a property that is adjacent to a lake of 50 acres or more and on which there are 3 or more dwelling units or on which there are commercial structures may, in lieu of placing a pier or wharf described under sub. (1g) (f), place a pier or wharf that has either of the following number of boat slips, whichever is smaller:

1. Four boat slips for the first 50 feet of the property's shoreline footage and no more than 2 boat slips for each additional 50 feet of the property's shoreline footage.

2. One boat slip for each dwelling unit, plus an additional number of boat slips if the additional slips are open to the public and the use of the additional slips is limited to the transient docking of boats for less than 24 hours.

(b) If the riparian owner or owners of a property described in par. (a) are eligible to place a pier or wharf with the number of boat slips specified in par. (a), the pier or wharf must be located in an area other than an area of special natural resource interest, may not interfere with the riparian rights of other riparian owners, and must meet all of the requirements for the placement of the pier or wharf specified under sub. (1g) (f) except for the limitation on the number of boat slips allowed under sub. (1g) (f).

(c) If the riparian owner or owners of a property described in par. (a) are eligible and propose to place a pier or wharf with the number of boat slips specified in par. (a), the riparian owner or owners shall apply to the department for an individual permit under s. 30.208 authorizing the configuration of the pier or wharf unless the configuration is authorized by the department under a general permit under s. 30.206 (1g). The department may not deny the permit on the basis of the number of slips proposed by the riparian owner or owners if the number of slips proposed does not exceed the number allowed under par. (a). A riparian owner or owners who apply for a permit under this paragraph shall be presumed to be entitled to the number of slips allowed under par. (a).

(1k) EXEMPTION FOR CERTAIN STRUCTURES. (a) In this subsection, "structure" means a pier, wharf, boat shelter, boat hoist, or boat lift.

(b) In addition to the exemptions under sub. (1g), a riparian owner of a pier or wharf that was placed on the bed of a navigable water on or before February 6, 2004, is exempt from the permit requirements under this section if all of the following apply:

1. The pier or wharf is not more than 8 feet wide as measured across the shortest horizontal distance of any portion of the pier or wharf surface, except that a pier may have an area as a loading platform that is more than 8 feet wide if the platform is located at the lakeward end of the pier, or located at the end of the pier that extends into a stream, does not have more than 300 square feet in surface area, and meets the following width requirements:

a. If the platform has a surface area of 200 square feet or less, the platform may be of any width.

b. If the platform has a surface area of more than 200 square feet but not more than 300 square feet, the platform may not be more than 10 feet wide.

2. The pier or wharf does not interfere with the riparian rights of other riparian owners.

3. The riparian owner registers the pier or wharf with the department, in the manner and form required by the department, no later than April 1, 2012.

(c) The department shall make available to riparian owners a form for registration of a pier or wharf under par. (b) 3. that is designed so that it may be recorded with the register of deeds. A riparian owner may, but is not required to, record the registration form with the register of deeds of the county where the pier or wharf is located. The register of deeds may charge the fee under s. 59.43 (2) (ag) for the recording of a pier or wharf registration under par. (b) 3. The department may not charge a fee for the registration of a pier or wharf under par. (b) 3.

(cm) Except as provided in par. (d), the department may not take any enforcement action under this chapter against a riparian owner for the placement of any of the following:

1. A structure for which the department has issued a permit under this section on or before February 6, 2004, if the structure is in compliance with that permit.

2. A structure for which the department has issued a written authorization on or before February 6, 2004, if the structure is in compliance with that written authorization.

3. A structure that is exempt under par. (b).

(d) The prohibition on enforcement action under par. (cm) does not apply to enforcement action initiated by the department before February 6, 2004, if the enforcement action remains pending on April 16, 2008.

(e) A riparian owner who is exempt under par. (b) from the permit requirements under this section or who is exempt under par. (cm) from enforcement action under this chapter may do all of the following:

1. Repair and maintain the exempt structure without obtaining a permit from the department under this section unless the owner enlarges the structure.

2. If the exempt structure is a pier or wharf, relocate or reconfigure the pier or wharf if the riparian owner does not enlarge the pier or wharf, the riparian owner registered the pier or wharf with the department under par. (b) 3. and, before relocating or reconfiguring the pier or wharf, the riparian owner registers the reconfigured or relocated pier or wharf with the department under this subdivision.

(f) A decision of the department against the owner of a structure for which an exemption is claimed under this subsection is subject to a trial de novo.

(1m) DUCK CREEK DRAINAGE DISTRICT STRUCTURES AND DEPOSITS. A structure or deposit that the drainage board for the Duck Creek Drainage District places in a drain that the board operates in the Duck Creek Drainage District is exempt from the permit requirements under this section if either of the following applies:

(a) The department of agriculture, trade and consumer protection, after consulting with the department of natural resources, specifically approves the structure or deposit.

(b) The structure or deposit is required, under rules promulgated by the department of agriculture, trade and consumer protection, in order to conform the drain to specifications approved by the department of agriculture, trade and consumer protection after consulting with the department of natural resources.

2009−10 Wis. Stats. database updated and current through 2011 Wis. Act 39 and July 25, 2011. Statutory changes effective on or prior to 9−1−11 are printed as if currently in effect. Statutory changes effective after 9−1−11 are designated by NOTES. See Are The Statutes on this Website Official?

Electronic reproduction of 2009−10 Wis. Stats. database, current through 2011 Wis. Act 39 and July 25, 2011.

(1p) RULES. (a) The department may promulgate rules concerning the exempt activities under sub. (1g) and concerning piers and wharves under sub. (1j) that only do any of the following:

1. Establish reasonable installation practices for the placement of structures or the deposit of material to minimize environmental impacts.

2. Establish reasonable construction and design requirements for the placement of structures under sub. (1g) (c), (d), (f), (g), (h), and (km) that are consistent with the purpose of the activity and for piers and wharves under sub. (1j).

3. Establish reasonable limitations on the location of the placement of structures or the deposit of material at the site affected by the activity.

(b) Notwithstanding par. (a), the rules under par. (a) 1. and 2. may not establish practices or requirements that prohibit the placement of structures or the deposit of material or that render the placement of structures or the deposit of material economically cost−prohibitive.

(2m) PERMITS IN LIEU OF EXEMPTIONS. The department may decide to require that a person engaged in an activity that is exempt under sub. (1g) apply for an individual permit or seek authorization under a general permit if the department has conducted an investigation and visited the site of the activity and has determined that conditions specific to the site require restrictions on the activity in order to prevent any of the following:

(a) Significant adverse impacts to the public rights and interests.

(b) Environmental pollution, as defined in s. 299.01 (4).

(c) Material injury to the riparian rights of any riparian owner.

(2r) EXEMPTION DETERMINATIONS. (a) A person may submit to the department a written statement requesting that the department determine whether a proposed activity is exempt under sub. (1g). The statement shall contain a description of the proposed activity and site and shall give the department consent to enter and inspect the site.

(b) The department shall do all of the following within 15 days after receipt of a statement under par. (a):

1. Enter and inspect the site on which the activity is located, subject to s. 30.291, if the department determines such an inspection is necessary.

2. Make a determination as to whether the activity is exempt.

3. Notify in writing the person submitting the statement which general or individual permit will be required for the activity, if the department determines that the activity is not exempt.

(c) If the department does not take action under par. (b), the department may not require at any time that the person proposing to engage in the activity apply for an individual permit or seek authorization under a general permit unless required to do so by a court or hearing examiner.

(d) If a statement under par. (a) is not given or if the statement does not give consent to inspect, the 15−day time limit under par. (b) does not apply.

(3) GENERAL PERMITS. (a) The department shall issue statewide general permits under s. 30.206 that authorize riparian owners to do all of the following:

1. Place a layer of sand or similar material on the bed of a lake adjacent to the owner's property for the purpose of improving recreational use.

3c. Place riprap in order to replace or repair existing riprap, other than riprap that is exempt under sub. (1g) (i) or (j).

3g. Place riprap on the bed or bank of a navigable water adjacent to an owner's property in an amount up to and including 100 continuous feet in an inland lake of 300 acres or more.

3r. Place riprap on the bed or bank of a navigable water adjacent to an owner's property in an amount up to and including 300 continuous feet in a Great Lakes water body.

4. Place crushed rock or gravel, reinforced concrete planks, adequately secured treated timbers, cast in place concrete or similar material on the bed of a navigable stream for the purpose of developing a ford if an equal amount of material is removed from the stream bed.

5. Place crushed rock or gravel, reinforced concrete planks, cast in place concrete or similar material on the bed of navigable waters adjacent to the owner's property for the purpose of building a boat landing.

6. Place a permanent boat shelter adjacent to the owner's property for the purpose of storing or protecting watercraft and associated materials, except that no general or individual permit may be issued for a permanent boat shelter that is constructed after May 3, 1988, if the property on which the permanent boat shelter is to be located also contains a boathouse within 75 feet of the ordinary high−water mark or if there is a boathouse over navigable waters adjacent to the owner's property.

13. Place a seawall to replace an existing seawall for which a permit has been issued under this chapter. The replacement may not exceed 100 continuous feet in an inland lake of 300 or more acres and may not exceed 300 continuous feet in a Great Lakes water body.

(br) The department may promulgate rules that specify structures or deposits, in addition to those listed in par. (a), that may be authorized by statewide general permits.

(c) The department may impose conditions on general permits issued under par. (a) 6. to govern the architectural features of boat shelters and the number of boat shelters that may be constructed adjacent to a parcel of land. The conditions may not govern the aesthetic features or color of boat shelters. The conditions shall be designed to ensure the structural soundness and durability of boat shelters. A municipality may enact ordinances that are consistent with this paragraph and with any conditions imposed on general permits issued to regulate the architectural features of boat shelters that are under the jurisdiction of the municipality.

(3m) INDIVIDUAL PERMITS. (a) For a structure or deposit that is not exempt under sub. (1g) and that is not subject to a general permit under sub. (3), and for a structure or deposit for which the department requires an individual permit under sub. (2m) or s. 30.206 (3r), a riparian owner may apply to the department for the individual permit that is required under sub. (1) in order to place the structure for the owner's use or to deposit the material.

(am) 1. Except as provided under subd. 2., the department may not refuse to allow a riparian owner to apply for an individual permit for the placement of a pier or wharf, including a solid pier, that exceeds the number of boat slips authorized under sub. (1g) (f) or (1j). The department shall evaluate permit applications under this paragraph on an individual basis and shall grant such applications if the department finds that the pier or wharf meets the requirements under par. (c) 1. to 3.

2. The department may deny an individual permit to the riparian owner or owners of a property that is adjacent to a lake of 50 acres or more and on which there are 3 or more dwelling units if the riparian owner or owners apply for an individual permit for the placement of a pier or wharf with a number of boat slips that exceeds the number of boat slips specified in sub. (1j) (a) 2.

(ar) The department shall issue an individual permit under this subsection to a riparian owner for a pier or wharf that was placed on the bed of a navigable water on or before February 6, 2004, unless the department demonstrates that one or more of the conditions under s. 30.13 (1) (a) to (e) has not been met. The department may not charge a riparian owner described under this paragraph a fee for an individual permit issued under this subsection.

(b) The notice and hearing provisions of s. 30.208 (3) to (5) shall apply to an application under par. (a).

(c) The department shall issue an individual permit to a riparian owner for a structure or a deposit pursuant to an applica-

Electronic reproduction of 2009−10 Wis. Stats. database, current through 2011 Wis. Act 39 and July 25, 2011.

tion under par. (a) if the department finds that all of the following apply:

1. The structure or deposit will not materially obstruct navigation.

2. The structure or deposit will not be detrimental to the public interest.

3. The structure or deposit will not materially reduce the flood flow capacity of a stream.

(cm) In determining whether to issue an individual permit to the owner of a proposed pier or wharf, the department may not deny the permit unless the department considers all reasonable alternatives offered by the department and the owner of the pier or wharf relating to the location, design, construction, and installation of the pier or wharf.

(d) 1. In this paragraph, "solid pier" means a pier that does not allow for the free flow of water beneath the pier.

2. The department may promulgate rules that limit the issuance of individual permits for solid piers to outlying waters, harbors connected to outlying waters, the Fox River from the dam at De Pere to Lake Winnebago, Lake Winnebago, and the Mississippi River. The rules may establish reasonable conditions to implement the criteria under par. (c) 1. to 3. The rules may not prohibit the issuance of individual permits for solid piers used for private or commercial purposes.

(5) PENALTY. Any person violating this section or any term or condition of a permit issued pursuant thereto shall be fined not more than $1,000 or imprisoned not more than 6 months or both.

History: 1975 c. 250, 421; 1977 c. 130, 447; 1981 c. 226, 330; 1981 c. 390 s. 252; 1987 a. 374; 1989 a. 31; 1993 a. 132, 151, 236, 491; 1995 a. 27, 201, 227; 1997 a. 35, 248; 1999 a. 9; 2001 a. 16; 2003 a. 118, 321, 326, 327; 2007 a. 204; 2011 a. 25.

Cross−reference: See also chs. NR 305, 320, 323, 326, 328, 329, and 353, Wis. adm. code.

In a state proceeding to enforce a DNR order requiring an owner of land abutting a navigable lake to remove a quantity of fill, the burden of proof is on the state to establish the nonexistence of a bulkhead line. State v. McFarren, 62 Wis. 2d 492, 215 N.W.2d 459 (1974).

Sub. (1) (a) does not apply to conduct that only indirectly and unintentionally results in deposits on lake beds. State v. Deetz, 66 Wis. 2d 1, 224 N.W.2d 407 (1974).

When a DNR decision prohibited a structure under this section and the riparian owner did not seek review under s. 227.20 [now 227.57], the trial court had no jurisdiction to hear an action by the owner seeking a declaration that the structure was a "pier" permitted under s. 30.13. Kosmatka v. DNR, 77 Wis. 2d 558, 253 N.W.2d 887 (1977).

"Navigable waters" under this section are waters that are navigable in fact. A ski jump was a "structure" under this section. The public trust doctrine is discussed. State v. Bleck, 114 Wis. 2d 454, 338 N.W.2d 492 (1983).

Section 66.24 (5) (c) [now 200.11 (5) (c)] does not exempt sewerage districts from the requirements of s. 30.12. Cassidy v. DNR, 132 Wis. 2d 153, 390 N.W.2d 81 (Ct. App. 1986).

An area need not be navigable to be a lakebed. The ordinary high water mark is determinative. State v. Trudeau, 139 Wis. 2d 91, 408 N.W.2d 337 (1987).

The holder of an easement does not qualify as a riparian owner. De Nava v. DNR, 140 Wis. 2d 213, 409 N.W.2d 151 (Ct. App. 1987).

In considering whether a proposed structure is detrimental to the public interest, the DNR is authorized to weigh relevant policy factors including the preservation of the natural beauty of the state's waters, the public's fullest use of the waters, and the convenience of riparian owners. Sterlingworth Condominium Association v. DNR, 205 Wis. 2d 710, 556 N.W.2d 702 (Ct. App. 1996), 95−3526.

Review of local ordinances may be made in making a determination under sub. (2), but is not required. Issuance of a permit conditioned on compliance with a local ordinance was reasonable. Borsellino v. DNR, 2000 WI App 27, 232 Wis. 2d 430, 606 N.W.2d 255, 99−1220.

Although in granting pier permits under s. 30.12 the DNR acts in furtherance of the public trust, a cause of action cannot be based only on a general allegation of a violation of the public trust doctrine. Borsellino v. DNR, 2000 WI App 27, 232 Wis. 2d 430, 606 N.W.2d 255, 99−1220.

NOTE: The above annotated materials cite to the pre− 2003 Wisconsin Act 118 version of s. 30.12.

30.121 Regulation of boathouses and houseboats.

(2) PROHIBITIONS. After December 16, 1979 no boathouse or fixed houseboat may be constructed or placed beyond the ordinary high−water mark of any navigable waterway.

(3) MAINTENANCE. The riparian owner of any boathouse or fixed houseboat extending beyond the ordinary high−water mark of any navigable waterway may repair and maintain the boathouse or fixed houseboat if the cost of the repair or maintenance does not exceed 50% of the equalized assessed value of the boathouse or fixed houseboat. If the boathouse or fixed houseboat is not subject to assessment, the owner may make repairs if the cost of the repair or maintenance does not exceed 50% of the current fair market value of the boathouse or fixed houseboat.

(3g) EXCEPTION; HISTORICAL OR CULTURAL VALUE. Subsection (3) does not apply to the repair or maintenance of a boathouse or a fixed houseboat if the boathouse or fixed houseboat has a historic or cultural value, as determined by the state historical society or a local or county historical society established under s. 44.03.

(3m) EXCEPTION; CERTAIN SINGLE−STORY BOATHOUSES. Notwithstanding subs. (2) and (3), a person may construct, repair or maintain a single−story boathouse over an authorized waterway enlargement if:

(a) The boathouse does not extend beyond the ordinary high−water mark as it existed prior to the creation of the enlargement;

(b) The boathouse covers the entire enlargement; and

(c) Living quarters or plumbing fixtures are not constructed in the boathouse.

(3r) EXCEPTION; DAMAGES AFTER JANUARY 1, 1984. Subsections (2) and (3) do not apply to the repair or reconstruction of a damaged boathouse if the boathouse was damaged by violent wind, vandalism or fire and if the damage occurs after January 1, 1984.

(3w) EXCEPTION; COMMERCIAL BOATHOUSES. Notwithstanding subs. (2) and (3), a person may construct, repair, or maintain a boathouse if all of the following apply:

(a) The boathouse is used exclusively for commercial purposes.

(b) The boathouse is located on land zoned exclusively for commercial or industrial purposes or the boathouse is located on a brownfield, as defined in s. 238.13 (1) (a), or in a blighted area, as defined in s. 66.1331 (3) (a).

(c) The boathouse is located within a harbor that is being operated as a commercial enterprise or is located on a river that is a tributary of Lake Michigan or Lake Superior.

(d) The person has been issued any applicable individual permits under this subchapter and is in compliance with any applicable general permitting requirements under this subchapter.

(4) MAJOR REPAIR, ABANDONED STRUCTURES AND OBSTRUCTIONS TO NAVIGATION. The owner of a boathouse or a fixed houseboat which extends beyond the ordinary high−water mark of any navigable waterway and which is in a major state of disrepair or is a material obstruction to navigation may be ordered by the department to remove the structure from the waterway. The department shall follow the procedures set forth in s. 30.03 (4) (a) for ordering removal of a structure. If such a structure is abandoned and the department, after due diligence, cannot locate the owner, the department shall utilize the procedures set forth in s. 31.187 (1) for removing the abandoned structure.

(5) APPLICABILITY. Boathouses or fixed houseboats owned by the state or by local units of government shall comply with this section. This section does not apply to any structure listed on the national register of historic places in Wisconsin or the state register of historic places.

(6) RULES. The department may promulgate rules deemed necessary to carry out the purposes of this section. The rules may not govern the aesthetic features or color of boathouses.

(7) PENALTIES. Any person who constructs, owns or maintains a boathouse or fixed houseboat in violation of this section or in violation of any order issued under this section shall forfeit not less than $10 nor more than $50 for each offense. Each day a structure exists in violation of this section constitutes a separate offense.

History: 1979 c. 101; 1981 c. 117; 1983 a. 27 s. 2202 (38); 1987 a. 374, 395; 1995 a. 27; 2001 a. 16; 2003 a. 118; 2011 a. 32.

Cross−reference: See also ch. NR 325, Wis. adm. code.

A boathouse on a navigable, artificially created waterway maintained over private property with waters from a natural waterway is subject to regulation. Klingeisen v. DNR, 163 Wis. 2d 921, 472 N.W.2d 603 (Ct. App. 1991).

An administrative rule permitting repairs not authorized by this section was invalid. Oneida County v. Converse, 180 Wis. 2d 120, 508 N.W.2d 416 (1993).

Electronic reproduction of 2009−10 Wis. Stats. database, current through 2011 Wis. Act 39 and July 25, 2011.

The legislation creating sub. (3r) was not an unconstitutional private bill. Sub. (3r) preempts contrary local zoning ordinances. Pace v. Oneida County, 212 Wis. 2d 448, 569 N.W.2d 311 (Ct. App. 1997), 96−3514.

30.122 Unauthorized structures. All permanent alterations, deposits or structures affecting navigable waters, other than boathouses, which were constructed before December 9, 1977 and which did not require a permit at the time of construction, shall be presumed in conformity with the law, unless a written complaint is filed within 180 days of December 9, 1977. Upon the filing of a complaint, the department shall proceed with an action to enforce the applicable statutes.

History: 1977 c. 189.

30.123 Bridges and culverts. (2) PERMITS REQUIRED. Unless an individual or a general permit has been issued under this section or authorization has been granted by the legislature, no person may construct or maintain a bridge or construct, place, or maintain a culvert in, on, or over navigable waters.

(5) Any person who is issued a permit under this section respecting a bridge that may be used by the public shall construct and maintain the bridge in a safe condition at all times.

(6) EXEMPTIONS. Subsection (2) does not apply to any of the following:

(a) The construction and maintenance of highway bridges to which s. 30.1235 applies.

(b) The construction and maintenance of bridges by the department of transportation in accordance with s. 30.2022.

(d) The construction or placement and the maintenance of a culvert to replace a culvert that is authorized under a permit issued under s. 30.12 or 30.123, if the construction, placement, and maintenance will comply with the same conditions of the permit.

(e) The construction or placement and the maintenance of a culvert to replace a culvert that has an inside diameter that does not exceed 24 inches.

(6m) PERMITS IN LIEU OF EXEMPTIONS. The department may decide to require that a person engaged in an activity that is exempt under sub. (6) (d) or (e) apply for an individual permit or seek authorization under a general permit if the department has conducted an investigation and visited the site of the activity and has determined that conditions specific to the site require restrictions on the activity in order to prevent any of the following:

(a) Significant adverse impacts to the public rights and interests.

(b) Environmental pollution, as defined in s. 299.01 (4).

(c) Material injury to the riparian rights of any riparian owner.

(6r) EXEMPTION DETERMINATIONS. (a) A person may submit to the department a written statement requesting that the department determine whether a proposed activity is exempt under sub. (6) (d) or (e). The statement shall contain a description of the proposed activity and site and shall give the department consent to enter and inspect the site.

(b) The department shall do all of the following within 15 days after receipt of a statement under par. (a):

1. Enter and inspect the site on which the activity is located, subject to s. 30.291, if the department determines such an inspection is necessary.

2. Make a determination as to whether the activity is exempt.

3. Notify in writing the person submitting the statement which general or individual permit will be required for the activity, if the department determines that the activity is not exempt.

(c) If the department does not take action under par. (b), the department may not require at any time that the person proposing to engage in the activity apply for an individual permit or seek authorization under a general permit unless required to do so by a court or hearing examiner.

(d) If a statement under par. (a) is not given or if the statement does not give consent to inspect, the 15−day time limit under par. (b) does not apply.

(6s) RULES. (a) The department may promulgate rules concerning the exempt activities under sub. (6) that only do any of the following:

1. Establish reasonable installation practices for culverts to minimize environmental impacts.

2. Establish reasonable construction and design requirements for culverts that are consistent with the purpose of the activity.

3. Establish reasonable limitations on the location of culverts at the site affected by the activity.

(b) Notwithstanding par. (a), the rules under par. (a) 1. and 2. may not establish practices or requirements that prohibit the construction of culverts or that render the placement of culverts economically cost−prohibitive.

(7) GENERAL PERMITS. (a) The department shall issue statewide general permits under s. 30.206 that authorize any person to do all of the following:

1. Construct and maintain a clear−span bridge over a navigable water that provides access to a principal structure, as defined by rule by the department.

2. Construct and maintain a culvert that replaces a culvert that is not exempt under sub. (6) (d) or (e) and that is in a navigable water that is less than 35 feet wide.

3. Construct and maintain a bridge that is supported only by culverts in a navigable water that is less than 35 feet wide.

(b) The department may promulgate rules that specify bridges or culverts, in addition to those listed in par. (a), that may be authorized by statewide general permits.

(8) INDIVIDUAL PERMITS. (a) For the construction and maintenance of a bridge or culvert that is not exempt under sub. (6) and that is not subject to a general permit under sub. (7), a person may apply to the department for the individual permit that is required under sub. (2) in order to construct or maintain a bridge or culvert.

(b) The notice and hearing provisions of s. 30.208 (3) to (5) shall apply to an application under par. (a).

(c) The department shall issue an individual permit pursuant to an application under par. (a) if the department finds that the bridge or culvert will not materially obstruct navigation, will not materially reduce the effective flood flow capacity of a stream, and will not be detrimental to the public interest.

History: 1977 c. 190; Stats. 1977 s. 30.122; 1977 c. 272; Stats. 1977 s. 30.123; 1987 a. 374; 2003 a. 118.

30.1235 Municipal bridge construction. Municipalities which construct or reconstruct highway bridges shall not be required to obtain permits under s. 30.12 or 30.123 for that construction or reconstruction. All municipal highway bridges shall be constructed or reconstructed in accordance with standards developed under s. 84.01 (23).

History: 2003 a. 118 s. 58.

30.124 Waterfowl habitat management. (1) Notwithstanding ss. 30.12, 30.20, 30.44, and 30.45, and if the department finds that the activity will not adversely affect public or private rights or interests in fish and wildlife populations, navigation, or waterway flood flow capacity and will not result in environmental pollution, as defined in s. 299.01 (4), the department may do all of the following on public lands or waters:

(a) Cut aquatic plants, as defined in s. 30.07 (1) (b), without removing them from the water, for the purpose of improving waterfowl nesting, brood, and migration habitat.

(b) Develop nesting islands for the purpose of increasing waterfowl production.

(2) The department may use moneys available under s. 29.191 (1) (b) 1. to engage in the activities described under sub. (1).

History: 1987 a. 294; 1989 a. 31; 1995 a. 227; 1997 a. 248; 2001 a. 16; 2009 a. 55.

Cross−reference: See also ch. NR 353, Wis. adm. code.

30.1255 Report on control of aquatic nuisance species. (1) DEFINITION. In this section, "aquatic nuisance species"

Electronic reproduction of 2009−10 Wis. Stats. database, current through 2011 Wis. Act 39 and July 25, 2011.

means a nonindigenous species that threatens the diversity or abundance of native species or the ecological stability of infested waters or that threatens a commercial, agricultural, aquacultural or recreational activity dependent on infested waters.

(3) BIENNIAL REPORTS. (a) The department shall submit to the legislature biennial reports describing all of the following:

1. The current and potential economic and environmental impact of aquatic nuisance species on the waters of the state.

2. Potential strategies to control aquatic nuisance species.

3. Any geographical areas, public facilities or activities conducted in this state that need technical or financial assistance to reduce the environmental, public health or safety risk that may be caused by aquatic nuisance species.

(b) The department shall submit the report required under par. (a) before October 1 of each even−numbered year as part of the corresponding biennial report under s. 23.22 (6).

History: 1991 a. 269; 1997 a. 27; 1999 a. 9; 2001 a. 109; 2009 a. 55.

30.126 Regulation of fishing rafts. (2) PROHIBITION OF FISHING RAFTS. Except as provided under subs. (3) and (4), no person may construct or place a fishing raft on any navigable water.

(3) EXCEPTION FOR FISHING RAFTS ON THE MISSISSIPPI RIVER. A person may maintain any fishing raft located below and in close proximity to a lock or dam on the Mississippi River if the fishing raft is constructed or in place prior to December 4, 1983. A person may construct, place and maintain a fishing raft below and in proximity to a lock or dam on the Mississippi River if a permit is obtained for the fishing raft under s. 30.12.

(4) EXCEPTION FOR FISHING RAFTS ON THE WOLF RIVER. A person may construct, place and maintain a fishing raft on authorized portions of the Wolf River if the person complies with the restrictions under sub. (5). Authorized portions of the Wolf River consist of any part of the Wolf River or its stream tributaries from the Shawano dam downstream to Lake Poygan.

(5) RESTRICTIONS ON FISHING RAFTS ON THE WOLF RIVER. (a) *May not obstruct navigation or interfere with public rights.* No person may construct, place or maintain a fishing raft on authorized portions of the Wolf River in a manner which materially obstructs navigation or which materially interferes with public rights in the navigable waters.

(b) *May not be located in channel.* No person may construct, place or maintain a fishing raft on authorized portions of the Wolf River in the channel of the waterway.

(c) *May not block more than 25% of the waterway.* No person may construct, place or maintain a fishing raft on authorized portions of the Wolf River if the raft alone or in combination with any other fishing rafts previously constructed and placed on the waterway results in the obstruction of more than 25% of the width of the waterway.

(d) *May not be located within 10 feet of another fishing raft.* No person may construct, place or maintain a fishing raft on authorized portions of the Wolf River within 10 feet of any other fishing raft previously constructed and placed on the waterway.

(e) *May not affect riparian rights without permission of riparian owner.* No person who is not the riparian owner may construct, place or maintain a fishing raft which is attached or adjacent to property of a riparian owner or which otherwise affects the rights of a riparian owner unless the person receives the written permission of the riparian owner.

(f) *May not be used during certain times of the year.* No person may construct, place or maintain a fishing raft on authorized portions of the Wolf River prior to March 1 of any year. Any person who constructs, places or maintains a fishing raft on authorized portions of the Wolf River shall remove or cause the removal of the fishing raft from the waterway on or before October 31 of each year.

(g) *May not have improper flotation devices.* No person may construct, place or maintain a fishing raft on authorized portions of the Wolf River unless each flotation device used on the fishing raft is clean and uncontaminated, properly attached to the fishing raft and properly maintained in conformity with minimum standards established by the department by rule. The department shall establish minimum standards for the condition, attachment and maintenance of flotation devices used on fishing rafts.

(h) *May not have improper toilets.* No person may construct, place or maintain a fishing raft on authorized portions of the Wolf River if the fishing raft is equipped with a toilet which permits toilet waste to be disposed of in the waterway. A toilet on a fishing raft shall comply with rules of the department of safety and professional services as if the toilet were on a boat.

(i) *May not be abandoned.* No person who constructs or places a fishing raft on authorized portions of the Wolf River may abandon the fishing raft.

(j) *May not be improperly maintained.* No person who constructs or places a fishing raft on authorized portions of the Wolf River may fail to maintain the fishing raft in conformity with minimum standards established by the department by rule. After consulting with Wolf River municipalities, the department shall establish by rule minimum standards for the maintenance of fishing rafts to ensure proper repair, to promote maintenance in an aesthetically pleasing manner and to reduce the possibility that debris or litter from the fishing raft will be deposited in the waterway.

(k) *May not be used unless registered.* No person may construct, place or maintain a fishing raft on authorized portions of the Wolf River unless the fishing raft is registered under the uniform registration system and unless the registration number is displayed on the raft and on each flotation device in 3−inch block letters.

(6) REGISTRATION OF FISHING RAFTS ON THE WOLF RIVER. (a) *Department to establish a uniform registration system.* The department shall establish by rule general standards for a uniform registration system for fishing rafts, on authorized portions of the Wolf River, which includes all the following:

1. A uniform numbering system for fishing rafts and flotation devices used on fishing rafts.

2. Provisions for the annual registration of all fishing rafts.

3. Provisions for the payment of an annual registration fee of $5 for each fishing raft.

(b) *Municipal adoption, administration and enforcement of uniform registration system.* 1. A Wolf River municipality shall adopt by ordinance and administer and enforce a uniform registration system for fishing rafts consistent with the general standards established by the department.

2. A Wolf River municipality which adopts, administers and enforces a uniform registration system for fishing rafts and which adopts and enforces restrictions on fishing rafts may retain all registration fees to administer and enforce the uniform registration system and the restrictions.

3. A Wolf River municipality which adopts a uniform registration system for fishing rafts shall transmit a complete list of all registered fishing rafts and their owners to the department on or before April 1 of each year.

(c) *Failure of municipality to adopt, administer or enforce the uniform registration system.* If a Wolf River municipality fails to adopt by ordinance a uniform registration system for fishing rafts within 120 days after the effective date of rules promulgated by the department under par. (a), or fails to adequately administer or enforce the uniform registration system for fishing rafts, the department, after providing notice and conducting a hearing on the matter, may adopt or administer and enforce the uniform registration system for fishing rafts in that municipality. If the department adopts, administers or enforces the uniform registration system for fishing rafts in a Wolf River municipality, the department may retain all registration fees for fishing rafts registered in that municipality.

(d) *Conflicts.* Any conflict in jurisdiction arising from the enactment of ordinances for the registration of fishing rafts on

Electronic reproduction of 2009−10 Wis. Stats. database, current through 2011 Wis. Act 39 and July 25, 2011.

authorized portions of the Wolf River by 2 or more Wolf River municipalities shall be resolved under s. 66.0105.

(7) MUNICIPAL REGULATION OF FISHING RAFTS ON THE WOLF RIVER. (a) *Municipal adoption and enforcement of restrictions on fishing rafts.* A Wolf River municipality shall adopt by ordinance and enforce restrictions on fishing rafts at least as restrictive as those under sub. (5).

(b) *Failure of a municipality to adopt and enforce restrictions on fishing rafts.* If a Wolf River municipality fails to adopt by ordinance restrictions on fishing rafts within 120 days after the effective date of rules promulgated by the department under subs. (5) (g) and (j) and (6) (a), or fails to adequately enforce the restrictions on fishing rafts, the department, after providing notice and conducting a hearing on the matter, may enforce restrictions on fishing rafts. If the department enforces restrictions on fishing rafts in a Wolf River municipality, the department may retain all registration fees for fishing rafts registered in that municipality.

(c) *Conflicts.* Any conflict in jurisdiction arising from the enactment of ordinances restricting fishing rafts on authorized portions of the Wolf River by 2 or more Wolf River municipalities shall be resolved under s. 66.0105.

(8) REMOVAL OF FISHING RAFTS. (a) *Municipality may order removal.* A Wolf River municipality may order a person who is violating restrictions under sub. (5) or restrictions on fishing rafts adopted by ordinance to comply with the restrictions or to remove the fishing raft from authorized portions of the Wolf River.

(b) *Municipality may cause removal.* 1. If a person fails to comply with an order issued under par. (a) or if a Wolf River municipality is unable to issue an order under par. (a) because the fishing raft is not registered and the municipality cannot determine who constructed, placed or maintained the fishing raft on authorized portions of the Wolf River, the municipality may remove the fishing raft and dispose of it.

2. The owner or person responsible for the fishing raft shall reimburse a Wolf River municipality for all costs associated with the removal and disposal of the fishing raft under this paragraph.

(c) *Department authority to order removal.* 1. The department may order a person who is violating sub. (2) to remove the fishing raft from the navigable waters.

2. The department shall report any violation of sub. (5) to the Wolf River municipality where the violation occurred.

3. If the Wolf River municipality does not act under par. (b) 1. within 90 days after the department reports the violation, the department may order the person who is violating restrictions under sub. (5) to comply with the restrictions or to remove the fishing raft from authorized portions of the Wolf River.

(d) *Department authority to cause removal.* 1. If a person does not comply with an order issued under par. (c) 1. or if the department is unable to issue an order under par. (c) 1. because the department cannot determine who constructed, placed or maintained the fishing raft on the navigable waters, the department may remove the fishing raft and dispose of it.

2. If a person does not comply with an order issued under par. (c) 3., the department may remove the fishing raft and dispose of it.

3. If the department is unable to issue an order under par. (c) 3. because the fishing raft is not registered and the department cannot determine who constructed, placed or maintained the fishing raft on authorized portions of the Wolf River and if the Wolf River municipality does not act under par. (b) 1. within 120 days after the department reports the violation, the department may remove the fishing raft and dispose of it.

4. The owner or person responsible for the fishing raft shall reimburse the department for all costs associated with the removal and disposal of the fishing raft under this paragraph.

(9) ENFORCEMENT. (a) *Department and district attorney's authority to enforce.* The department or the district attorney for the county where the violation occurred may enforce this section, any rule promulgated under this section or any order issued by the department under this section. Before the department may enforce standards and rules promulgated under sub. (5) (j) with respect to a specific fishing raft and before the department may issue an order based on these standards or rules with respect to a specific fishing raft, the department shall notify and consult with the Wolf River municipality where the fishing raft is located.

(b) *Municipality's authority to enforce.* A Wolf River municipality may enforce any ordinance adopted or order issued by the municipality under this section.

(10) PENALTIES. (a) *Violation of statute, rule or department order.* A person who violates this section, any rule promulgated under this section or any order issued by the department under this section shall forfeit not less than $10 nor more than $250 for each offense. Each day of violation constitutes a separate offense.

(b) *Violation of municipal ordinance or order.* A person who violates any ordinance adopted or order issued by the municipality under this section is subject to the penalty established by ordinance. A Wolf River municipality may not establish this penalty at a level which is less severe than the penalty established under par. (a).

History: 1983 a. 100; 1987 a. 374; 1995 a. 27 ss. 1658, 9116 (5); 1999 a. 150 s. 672; 2011 a. 32.

Cross−reference: See also ch. NR 324, Wis. adm. code.

30.13 Regulation of wharves, piers and swimming rafts; establishment of pierhead lines. (1) CONSTRUCTION ALLOWED WITHOUT PERMIT UNDER CERTAIN CIRCUMSTANCES. A riparian proprietor may construct a wharf or pier in a navigable waterway extending beyond the ordinary high−water mark or an established bulkhead line in aid of navigation without obtaining a permit under s. 30.12 if the pier or wharf is exempt from obtaining a permit under s. 30.12 or if all of the following conditions are met:

(a) The wharf or pier does not interfere with public rights in navigable waters.

(b) The wharf or pier does not interfere with rights of other riparian proprietors.

(c) The wharf or pier does not extend beyond any pierhead line which is established under sub. (3).

(d) The wharf or pier does not violate any ordinances enacted under sub. (2).

(e) The wharf or pier is constructed to allow the free movement of water underneath and in a manner which will not cause the formation of land upon the bed of the waterway.

(1m) SWIMMING RAFTS ALLOWED WITHOUT PERMIT UNDER CERTAIN CIRCUMSTANCES. A riparian owner may place a swimming raft in a navigable waterway for swimming and diving purposes without obtaining a permit under s. 30.12 if all of the following conditions are met:

(a) The swimming raft does not interfere with public rights in navigable waters.

(b) The swimming raft does not interfere with rights of other riparian owners.

(c) The swimming raft is placed within 200 feet of shore.

(2) WHARVES, PIERS AND SWIMMING RAFTS REGULATED. A municipality may enact ordinances not inconsistent with this section regulating the construction and location of wharves, piers and swimming rafts located within or attached to land within that municipality.

(3) ESTABLISHMENT OF PIERHEAD LINES. (a) Any municipality authorized by s. 30.11 to establish a bulkhead line may also establish a pierhead line in the same manner as it is authorized to establish a bulkhead line, except that a metes and bounds legal description is not required nor is the map required to be prepared by a registered land surveyor and except that if the municipality has created a board of harbor commissioners the municipality must obtain the approval of the board concerning the establishment of

2009−10 Wis. Stats. database updated and current through 2011 Wis. Act 39 and July 25, 2011. Statutory changes effective on or prior to 9−1−11 are printed as if currently in effect. Statutory changes effective after 9−1−11 are designated by NOTES. See Are The Statutes on this Website Official?

Electronic reproduction of 2009−10 Wis. Stats. database, current through 2011 Wis. Act 39 and July 25, 2011.

the pierhead line in addition to obtaining the approval of the department.

(b) Any pierhead line established by a municipality shall be established in the interest of the preservation and protection of its harbor or of public rights in navigable waters.

(4) UNLAWFUL OBSTRUCTION. (a) *Interferes with public rights.* A wharf or pier which interferes with public rights in navigable waters constitutes an unlawful obstruction of navigable waters unless the wharf or pier is authorized under a permit issued under s. 30.12 or unless other authorization for the wharf or pier is expressly provided.

(b) *Interferes with riparian rights.* A wharf or pier which interferes with rights of other riparian owners constitutes an unlawful obstruction of navigable waters unless the wharf or pier is authorized under a permit issued under s. 30.12 or unless other authorization for the wharf or pier is expressly provided.

(c) *Extends beyond pierhead line; exception.* A wharf or pier which extends into navigable waters beyond any pierhead line established under sub. (3) constitutes an unlawful obstruction of navigable waters unless a valid permit, license or authorization for the wharf or pier is granted or unless it is a permissible preexisting wharf or pier. A wharf or pier is a permissible preexisting wharf or pier if it existed prior to the establishment of the pierhead line, if it is not extended or expanded after that date and if the ownership of the land to which it is attached did not change after that date except that a wharf or pier continues its status as a permissible preexisting wharf or pier for one year after the date the change of ownership is recorded. The seasonal removal of a wharf or pier does not affect its status as a permissible preexisting wharf or pier if it is reestablished in substantially the same form. Status as a permissible preexisting wharf or pier does not imply that authorization for the wharf or pier is provided for the purposes of par. (a) or (b). The owner of a wharf or pier may submit evidence to the municipality that it is a permissible preexisting wharf or pier at any time after the municipality establishes the pierhead line.

(d) *Violates regulations.* A wharf or pier which violates the regulations contained in sub. (2) or in any ordinance enacted under sub. (2) constitutes an unlawful obstruction of navigable waters.

(5m) REMOVAL OF WHARVES AND PIERS IN NAVIGABLE WATERS. (a) 1. The governing body of a city, village or town or a designated officer may order the owner of a wharf or pier which constitutes an unlawful obstruction of navigable waters under sub. (4) to remove that portion of the wharf or pier which constitutes an unlawful obstruction.

2. The governing body of a city, village or town or a designated officer may order the owner of a wharf or pier in navigable waters which in its judgment is so old, dilapidated or in need of repair that it is dangerous, unsafe or unfit for use to repair or remove the wharf or pier. If the governing body of a city, village or town or a designated officer determines that the cost of repair is likely to exceed 50% of the equalized assessed value of the wharf or pier or, if the wharf or pier is not subject to assessment, if the cost of repair is likely to exceed 50% of the current fair market value, then repair is presumed unreasonable and the wharf or pier is presumed to be a public nuisance.

3. An order under this paragraph shall be served upon the owner or person responsible in the manner provided for the service of a summons in circuit court. If the owner or person responsible cannot be found, the order may be served by posting it on the wharf or pier and by publishing it as a class 3 notice under ch. 985. The order shall specify the action to be taken and the time within which it shall be complied with. At least 50 days must be allowed for compliance.

(b) 1. If the owner or person responsible fails to comply with an order issued under par. (a), the governing body of a city, village or town or a designated officer may cause the wharf or pier to be removed through any available public agency or by a contract or arrangement by a private person. The cost of the removal may be charged against the real estate on which or adjacent to which the wharf or pier is located, constitutes a lien against that real estate and may be assessed and collected as a special tax. The governing body of the city, village or town or the designated officer may sell any salvage or valuable material resulting from the removal at the highest price obtainable. The governing body of the city, village or town or the designated officer shall remit the net proceeds of any sale, after deducting the expense of the removal, to the circuit court for use of the person entitled to the proceeds subject to the order of the court. The governing body of the city, village or town or the designated officer shall submit a report on any sale to the circuit court which shall include items of expense and the amount deducted. If there are no net proceeds, the report shall state that fact.

2. If the owner or person responsible fails to comply with an order issued under par. (a), the governing body of a city, village or town or a designated officer may commence an action in circuit court for a court order requiring the person to comply with the order issued under par. (a). The court shall give the hearing on this action precedence over other matters on the court's calendar and may assess costs.

(c) A person affected by an order issued under par. (a) may apply to circuit court within 30 days after service of the order for a restraining order prohibiting the governing body of the city, village or town or the designated officer from removing the wharf or pier. The court shall conduct a hearing on the action within 20 days after application. The court shall give this hearing precedence over other matters on the court's calendar. The court shall determine whether the order issued under par. (a) is reasonable. If the court finds that the order issued under par. (a) is unreasonable, it shall issue a restraining order or modify it as the circumstances require and the governing body of the city, village or town or the designated officer may not issue another order under par. (a) with respect to the wharf or pier unless its condition is substantially changed. The court may assess costs. The remedy provided under this paragraph is exclusive and no person affected by an order issued under par. (a) may recover damages for the removal of a wharf or pier under this section.

(6) DOCK LINE NOT INVALIDATED. A dock line lawfully established before January 1, 1960, is a lawfully established pierhead line.

History: 1981 c. 252; 1987 a. 374; 1999 a. 150 ss. 3, 120, 123, 125, 127, 129, 131, 133; 2003 a. 118; 2007 a. 204.

Cross−reference: See also ch. NR 326, Wis. adm. code.

When a DNR decision prohibited a structure under s. 30.13 and the riparian owner did not seek review under s. 227.20 [now 227.57], the trial court had no jurisdiction to hear an action by the owner seeking a declaration that the structure was a "pier" permitted under s. 30.13. Kosmatka v. DNR, 77 Wis. 2d 558, 253 N.W.2d 887 (1977).

In considering whether a proposed structure is detrimental to the public interest, the DNR is authorized to weigh relevant policy factors including the preservation of the natural beauty of the state's waters, the public's fullest use of the waters, and the convenience of riparian owners. Sterlingworth Condominium Association v. DNR, 205 Wis. 2d 710, 556 N.W.2d 791 (Ct. App. 1996), 95−3526.

The permitting criteria under DNR rules are supplemental to the criteria under sub. (1). To escape the requirement of obtaining a permit, the requirements of both the statute and rules must be met. Sea View Estates Beach Club, Inc. v. DNR, 223 Wis. 2d 138, 588 N.W.2d 667 (Ct. App. 1998), 97−3418.

Riparian rights are qualified by reasonable use and are subordinate to public rights. The common law requires reasonable use by riparian owners to be determined by the extent and capacity of the lake, the uses to which it has been put, and the rights that other riparian owners on the same lake also have. The inquiry is highly fact−specific, and determinations are made on a case−by−case basis. Hilton v. Department of Natural Resources, 2006 WI 84, 293 Wis. 2d 1, 717 N.W.2d 166, 03−3353.

Historical use, however it is determined, is one of the factors that an administrative law judge may weigh in balancing the private rights and public interests at stake in riparian rights/public trust doctrine cases. The cases do not establish any set definition of historical use or any hard and fast methodology for determining it. That historic use must be based on something like passage of an ordinance or DNR contact is not required by public policy considerations. An ALJ may review local ordinances in making a permit determination but is not required to do so. Hilton v. Department of Natural Resources, 2006 WI 84, 293 Wis. 2d 1, 717 N.W.2d 166, 03−3353.

30.131 Wharves and piers placed and maintained by persons other than riparian owners. (1) Notwithstanding s. 30.133, a wharf or pier of the type which does not require a permit under ss. 30.12 (1) and 30.13 that abuts riparian land and that is placed in a navigable water by a person other than the owner of

Electronic reproduction of 2009−10 Wis. Stats. database, current through 2011 Wis. Act 39 and July 25, 2011.

the riparian land may not be considered to be an unlawful structure on the grounds that it is not placed and maintained by the owner if all of the following requirements are met:

(a) The owner of the riparian land or the owner's predecessor in interest entered into a written easement that was recorded before December 31, 1986, and that authorizes access to the shore to a person who is not an owner of the riparian land.

(b) The person to whom the easement was granted or that person's successor in interest is the person who places and maintains the wharf or pier.

(c) The placement and maintenance of the wharf or pier is not prohibited by and is not inconsistent with the terms of the written easement.

(d) The wharf or pier has been placed seasonally in the same location at least once every 4 years since the written easement described in par. (a) was recorded.

(e) The wharf or pier is substantially the same size and configuration as it was on April 28, 1990, or during its last placement before April 28, 1990, whichever is later.

(f) The placement of the wharf or pier complies with the provisions of this chapter, with any rules promulgated under this chapter and with any applicable municipal regulations or ordinances.

(2) Notwithstanding s. 30.133, an easement under sub. (1) may be conveyed if it is conveyed at the same time, and to the same person, that the land to which the easement is appurtenant is conveyed.

History: 1989 a. 217; 1993 a. 167.

The application of s. 30.131 is discussed. Godfrey Co. v. Lopardo, 164 Wis. 2d 352, 474 N.W.2d 786 (Ct. App. 1991).

This section does not grant rights to a nonriparian owner vis a vis a riparian owner. The statute speaks only to the lawfulness of a pier maintained under a nonriparian access easement. The terms and purpose of the easement may include the right to use and maintain the pier. Wendt v. Blazek, 2001 WI App 91, 242 Wis. 2d 722, 626 N.W.2d 78, 00−2448.

30.133 Prohibition against conveyance of riparian rights. (1) Beginning on April 9, 1994, and except as provided in s. 30.1335, no owner of riparian land that abuts a navigable water may grant by an easement or by a similar conveyance any riparian right in the land to another person, except for the right to cross the land in order to have access to the navigable water. This right to cross the land may not include the right to place any structure or material, including a boat docking facility, as defined in s. 30.1335 (1) (a), in the navigable water.

(2) This section does not apply to riparian land located within the boundary of any hydroelectric project licensed or exempted by the federal government, if the conveyance is authorized under any license, rule or order issued by the federal agency having jurisdiction over the project.

History: 1993 a. 167; 2007 a. 20; 2009 a. 180, 352.

Small lock boxes were not "intended for any type of independent use" within the meaning of a condominium "unit" under s. 703.02 (15) and were not valid condominium units. Without a valid condominium unit, the transfer of riparian rights purportedly attached to the condominium lock boxes was in violation of this section. ABKA Limited Partnership v. DNR, 2002 WI 106, 255 Wis. 2d 486, 648 N.W.2d 854, 99−2306.

This section prohibits the severing by easement or by a similar conveyance of riparian rights from the riparian lands to which they are attached, preventing the reservation of riparian rights apart from riparian land by an easement, as well as the granting of riparian rights to a nonriparian. Berkos v. Shipwreck Bay Condominium Association, 2008 WI App 122, 313 Wis. 2d 609, 758 N.W.2d 215, 06−2747.

NOTE: The above annotated cases cite to the pre−2007 Wisconsin Act 20 version of s. 30.133. See also s. 30.1335, created by 2007 Wisconsin Act 20.

30.1335 Marina condominiums. (1) DEFINITIONS. In this section:

(a) "Boat docking facility" means a pier, wharf, boat slip, or multi−boat−slip facility.

(b) "Common element" has the meaning given in s. 703.02 (2).

(c) "Condominium" has the meaning given in s. 703.02 (4).

(d) "Condominium unit" has the meaning given for "unit" in s. 703.02 (15).

(e) "Declarant" has the meaning given in s. 703.02 (7).

(f) "Declaration" has the meaning given in s. 703.02 (8).

(h) "Dwelling" means a structure or part of a structure that is used or intended to be used as a home or residence by one or more persons to the exclusion of all others.

(i) "Limited common element" has the meaning given in s. 703.02 (10).

(j) "Marina condominium" means a condominium in which the common elements, limited common elements, or condominium units consist of or include boat docking facilities and to which either or both of the following apply:

1. One or more of the boat docking facilities is not appurtenant to a dwelling.

2. None of the condominium units are dwellings.

(2) PROHIBITION. No owner of riparian land may create a marina condominium on the riparian land on or after June 1, 2007. Any declaration for a marina condominium that is recorded on or after June 1, 2007, is invalid and establishes ownership of the riparian land as a tenancy in common that is held by the owners of the marina condominium units.

(3) EXISTING MARINA CONDOMINIUMS. (a) Notwithstanding sub. (2), a declaration that creates or purports to create a marina condominium and that is recorded before June 1, 2007, shall be effective in creating the marina condominium regardless of subsequent activity affecting the declaration.

(b) If a marina condominium as described in par. (a) contains more than 300 boat slips, the declarant shall make at least 40 percent of the total number of boat slips in the marina condominium available for rent or for transient use by the public. When the declarant conveys title to, or another interest in, a condominium unit that is affected by this restriction on use, the declarant shall include a statement of the restriction in the instrument of conveyance.

(4) VALIDITY OF PERMITS. (a) For a marina that is converted into a marina condominium, if the owner of the marina is issued a permit or other authorization under this subchapter to place, maintain, or use a boat docking facility before the date that a declaration was recorded converting the marina into a marina condominium, the permit or authorization shall be deemed to satisfy the requirements of the other sections of this subchapter and may not be rescinded or modified by the department or a municipality or by court or administrative order if the grounds for the rescission or modification are based on the fact that the marina has been converted to a marina condominium. The permit or authorization shall remain in effect regardless of any subsequent activity affecting the declaration. This paragraph does not apply to any permit or authorization that is issued after the date that the declaration was recorded converting the marina into a marina condominium.

(b) For a marina condominium that was not previously a marina, if the owner of a marina condominium is issued a permit or other authorization under this subchapter to place, maintain, or use a boat docking facility, the permit or authorization shall be deemed to satisfy the requirements of the other sections of this subchapter and may not be rescinded or modified by the department or a municipality or by court or administrative order if the grounds for the rescission or modification are based on the fact that the boat docking facility is part of a marina condominium as opposed to a marina. The permit or authorization shall remain in effect regardless of any subsequent activity affecting the declaration.

(5) INCREASE IN SIZE OR NUMBER. An amendment or modification of a declaration as described under sub. (3) (a) may not increase the size of the boat docking facility or the size or the number of boat slips in a boat docking facility.

(6) SUBSEQUENT ACTIVITY AFFECTING A DECLARATION. For purposes of this section, subsequent activity affecting the declaration consists of any of the following:

(a) Any amendment, modification, or restatement of the declaration by court or administrative order or by consent of the owners of the condominium units as authorized under ch. 703.

Electronic reproduction of 2009−10 Wis. Stats. database, current through 2011 Wis. Act 39 and July 25, 2011.

(b) Any determination by court or administrative order that the declaration is void or voidable or that the condominium units in the condominium are not intended for any type of independent use.

(7) DEPARTMENT ENFORCEMENT. Notwithstanding sub. (4), the department retains the authority to enforce the terms and conditions of a permit or other authorization except to the extent that such terms and conditions relate to the form of ownership of a boat docking facility.

History: 2007 a. 20; 2009 a. 180, 352.

30.134 Use of exposed shore areas along streams. **(1)** DEFINITIONS. In this section:

(a) "Artificial ditch" means a ditch, channel, canal or other stream of water that has no prior history as a stream.

(b) "Exposed shore area" means the area of the bed of a navigable body of water that is between the ordinary high−water mark and the water's edge.

(c) "Highway" has the meaning given in s. 340.01 (22).

(d) "Riparian" means the owner, lessee or occupant of land that abuts a navigable body of water.

(2) AUTHORIZATION. Members of the public may use any exposed shore area of a stream without the permission of the riparian only if it is necessary to exit the body of water to bypass an obstruction.

(3) RESTRICTIONS; MEMBERS OF PUBLIC. (a) In using an exposed shore area of a stream, as authorized under sub. (2), a member of the public may not enter the exposed shore area except from the water, from a point of public access on the stream, or with the permission of the riparian.

(c) Use of an exposed shore area of a stream by members of the public does not grant an easement or other right to the exposed shore area that is greater than the right granted to the public under this section.

(4) RESTRICTIONS; RIPARIANS; OTHERS. (a) No riparian may prohibit a member of the public from using, as authorized under this section, an exposed shore area of a stream.

(b) No riparian may charge a fee for the use, as authorized under this section, of an exposed shore area of a stream.

(c) No person may obstruct a highway with the intention to impede or prohibit access by the public to an exposed shore area of a stream.

(5) EXCEPTIONS. The right granted to the public under this section to use an exposed shore area of a stream does not apply to any of the following:

(a) An exposed shore area of an impoundment on a stream.

(b) Any artificial ditch.

(c) Any location on a stream where there is no surface water flowing in the stream.

History: 1999 a. 9; 2001 a. 16.

30.135 Regulation of water ski platforms and jumps. **(1)** A riparian owner placing a water ski platform or water ski jump in a navigable waterway is exempt from the permit requirements under this chapter if all of the following requirements are met:

(a) The platform or jump does not interfere with public rights in navigable waters.

(b) The platform or jump does not interfere with rights of other riparian owners.

(c) The platform or jump is located at a site that ensures adequate water depth and clearance for safe water skiing.

(2) If the department determines that any of the requirements under sub. (1) are not met, the riparian owner shall submit an application for an individual permit to the department. The notice and hearing provisions under s. 30.208 (3) to (5) apply to the application.

History: 1997 a. 27; 2003 a. 118.

30.14 Reports of and hearings on violations. **(1)** MUNICIPALITIES TO REPORT VIOLATIONS. The governing body of each municipality shall promptly report to the department every violation of s. 30.12 or 30.13 which occurs or which it has reason to believe is likely to occur within the municipal boundaries.

(2) HEARINGS BY DEPARTMENT. Upon complaint by any person to the department that any wharf, pier or other structure exists in navigable water in violation of s. 30.12 or 30.13 or 30.207 or that any wharf, pier or other structure proposed to be built in navigable water will violate s. 30.12 or 30.13 or 30.207, the department shall investigate and may hold a hearing to determine whether the wharf, pier, or other structure is or would be in violation of those sections. If no hearing is held, the complainant shall be informed of the results of the investigation.

History: 1987 a. 374; 1997 a. 174.

30.15 Penalty for unlawful obstruction of navigable waters. **(1)** OBSTRUCTIONS PENALIZED. Any person who does any of the following shall forfeit not less than $10 nor more than $500 for each offense:

(a) Unlawfully obstructs any navigable waters and thereby impairs the free navigation thereof.

(b) Unlawfully places in navigable waters or in any tributary thereof any substance that may float into and obstruct any such waters or impede their free navigation.

(c) Constructs or maintains in navigable waters, or aids in the construction or maintenance therein, of any boom not authorized by law.

(d) Constructs or places any structure or deposits any material in navigable waters in violation of s. 30.12 or 30.13.

(3) EACH DAY A SEPARATE VIOLATION. Each day during which an obstruction, deposit or structure exists in violation of sub. (1) is a separate offense.

History: 1987 a. 374.

When a bridge obstructing navigation was necessary, reasonable, and existing before the plaintiff moved into the area, the defendant city need not abate the nuisance. Capt. Soma Boat Line v. Wisconsin Dells, 79 Wis. 2d 10, 255 N.W.2d 441 (1977).

If an unattended and anchored boat is left on navigable water for an unreasonable length of time, it constitutes a violation. 63 Atty. Gen. 601.

30.16 Removal of obstructions to navigation. **(1)** WATERCRAFT AND FLOATS. (a) *Removal.* The governing body of any municipality in this state may cause to be removed to a convenient and safe place any watercraft or float obstructing or interfering with the free navigation of any river, canal, water channel or slip within its harbor after having given reasonable notice to the master or owner or the agent of the master or owner, if known and a resident of this state, or to the person in charge thereof, to so remove such watercraft or float. The governing body of the municipality by ordinance or resolution may authorize any harbor master or other public officer over whom it has jurisdiction to remove the obstruction, and may prescribe the officer's duties with respect thereto and the mode of carrying them into effect and may prescribe penalties for violation of such ordinance or resolution.

(b) *Costs of removal.* All costs, charges and expenses of such removal are a first lien on such watercraft or float, which lien may be enforced in the manner provided by law. The owner of any such watercraft or float is also personally liable for such costs, charges and expenses, to be recovered by the municipality by a personal action.

(2) REMOVAL OF OBSTRUCTIONS TO NAVIGATION; WHARVES AND PIERS; ALTERNATIVE. As an alternative to the procedure specified under sub. (1), the governing body of a city, village or town may remove that portion of a wharf or pier which constitutes an unlawful obstruction to navigation as provided under s. 30.13 (5m).

History: 1981 c. 252; 1991 a. 316; 1993 a. 246; 1997 a. 35; 1999 a. 150 ss. 4, 672; 2001 a. 30 s. 96.

30.18 Withdrawal of water from lakes and streams. **(2)** PERMIT REQUIRED. (a) *Streams.* No person may withdraw

Electronic reproduction of 2009−10 Wis. Stats. database, current through 2011 Wis. Act 39 and July 25, 2011.

water from a stream in this state without an individual permit under this section if the withdrawal meets either of the following conditions:

1. The withdrawal is for the purpose of maintaining or restoring the normal level of a navigable lake or the normal flow of a navigable stream, regardless of whether the navigable lake or navigable stream is located within the watershed of the stream from which the water is withdrawn.

2. The withdrawal is for the purpose of agriculture or irrigation.

(b) *Streams or lakes.* No person, except a person required to obtain an approval under s. 281.41, may withdraw water from any lake or stream in this state without an individual permit under this section if the withdrawal will result in a water loss averaging 2,000,000 gallons per day in any 30−day period above the person's authorized base level of water loss.

(3) APPLICATION FOR PERMIT. (a) *Application; streams.* 1. Except as provided in par. (b), an applicant for a permit required under sub. (2) (a) shall file the application with the department setting forth the name and post−office address of the applicant, the name of the stream from which the water will be withdrawn, the point in the stream from which it is proposed to withdraw the water, the name of the lake or stream or the location and riparian status of the land to which the water is to be transferred, the location and description of the canal, tunnel or pipes and other works through which the water is to be withdrawn and transferred, the amount of water to be withdrawn, the periods of time when it is proposed to withdraw such water, the time required for the completion of the canal and other structures necessary for the completed project and, if required by the department, 4 copies of plans showing cross sections and profiles for any canal, tunnel, pipes or other works for withdrawing and transferring the water and any dam and control works at the point of withdrawal and at the point of discharge.

2. For a withdrawal under sub. (2) (a) 1., a map or maps shall accompany the application with a scale of not less than one inch per 2,000 feet, showing the land topography and the probable course of the proposed canal and other works, and the ownership of all lands upon which will be located the canal, tunnel, pipes and all other works for the completed project.

3. For a withdrawal under sub. (2) (a) 2., the application shall include written statements of consent to the withdrawal from all riparian owners who are making beneficial use of the water proposed to be withdrawn.

4. The department may require such additional information as may be pertinent.

(b) *Application; streams or lakes.* An application for a permit required under sub. (2) (b) shall be submitted in the form required under s. 281.35 (5) (a). If the withdrawal also meets either condition specified under sub. (2) (a), the application shall also comply with par. (a).

(4) NOTICE OF HEARING ON APPLICATION. (a) Upon receipt of a complete application, the department shall follow the notice and hearing procedures under s. 30.208 (3) to (5). In addition to providing notice as required under s. 30.208 (3) to (5), the department shall mail a copy of the notice to every person upon whose land any part of the canal or any other structure will be located, to the clerk of the next town downstream, to the clerk of any village or city in which the lake or stream is located and which is adjacent to any municipality in which the withdrawal will take place and to each person specified in s. 281.35 (5) (b) or (6) (f), if applicable.

(b) If a hearing on the application for a permit is conducted as a part of a hearing under s. 293.43, the notice and hearing provisions in that section supersede the notice and hearing provisions of par. (a).

(5) APPROVAL OF APPLICATION. (a) *Streams.* The department shall approve an application for a permit required under sub. (2) (a) if the department determines both of the following:

1. That the proposed withdrawal will not injure any public rights in navigable waters.

2. That the water to be withdrawn is surplus water, or if it is not surplus water, that all riparians who may be adversely affected by the withdrawal have consented to the proposed withdrawal.

(b) *Streams or lakes.* The department shall approve an application for a permit required under sub. (2) (b) if the grounds for approval specified under s. 281.35 (5) (d) are met and, if the permit is also required under sub. (2) (a), if the department makes the determinations specified under par. (a).

(6) PERMITS; USE OF WATER; REPORTING; REVIEW. (a) *Contents of permit.* The department shall specify on each permit issued under this section the quantity of water that may be withdrawn and the times during which water may be withdrawn. In addition, if the permit is one which is required under sub. (2) (b), the permit shall comply with s. 281.35 (6).

(b) *Use of water.* A person issued a permit under this section for the purpose of irrigation or agriculture may use the water on any land contiguous to the permittee's riparian land, but may not withdraw more water than it did before August 1, 1957, without applying to the department for a modification of the permit.

(c) *Reporting required.* The department shall require each permittee under this section to report its volume and rate of withdrawal and its volume and rate of water loss, if any, in the form and at the times specified by the department.

(d) *Review of permits.* If the permit is one that is required under sub. (2) (a), but not under sub. (2) (b), and the permit was issued on or after August 1, 1957, the department shall review the permit at least once every 5 years. If the permit is one that is required under sub. (2) (b), the department shall review the permit as required under s. 281.35 (6) (b).

(6m) REVOCATION. (a) The department shall revoke a permit issued under sub. (5) (a), which is not subject to sub. (2) (b), if it finds any of the following:

1. That the water being withdrawn is no longer surplus water, except that the department may allow the withdrawal to continue if all riparians adversely affected by the withdrawal continue to consent to it.

2. If the withdrawal is from a stream designated by the department as a trout stream, that the revocation is desirable for conservation purposes.

(b) The department may revoke any permit issued under sub. (5) (a), which is not subject to sub. (2) (b), if it finds that the withdrawal is detrimental to the stream from which the water is withdrawn.

(c) The department may revoke a permit issued under sub. (5) (b) only as provided under s. 281.35 (6).

(7) PREREQUISITES TO PROJECT CONSTRUCTION. After an application under this section has been filed with the department, the applicant may enter any land through which it is proposed to withdraw or transfer the water for the purposes of making any surveys required for drafting the plans for the project, but no work shall be commenced on the canal, headworks or other structures necessary for the project until the plans for the same have been approved by the department. Any person having received a permit required under sub. (2) (a) may construct upon the land of another the canal and other works authorized by the permit after the damage which will be sustained by the owner or owners of such land has been satisfied, or has been determined as provided for in ch. 32, and after the final sum so determined and all costs have been paid to the persons entitled thereto or to the clerk of the circuit court on their account.

(8) DEPARTMENT MAY RAISE WATER ELEVATIONS. If after examination and investigation the department determines that it is necessary to raise water elevations in any navigable stream or lake for conservation purposes, the department may, if funds are available from any source other than license fees, determine and establish the elevations to which the water may be raised or main-

Electronic reproduction of 2009−10 Wis. Stats. database, current through 2011 Wis. Act 39 and July 25, 2011.

tained, but the water elevation may not be established below the normal elevation. If any lands are damaged by raising the water levels above normal and the department cannot acquire the right to flow the lands by agreement with the owner, the department may acquire the lands or the right to flow the lands by condemnation under ch. 32.

(9) JUDICIAL REVIEW. Any order or determination made by the department is subject to judicial review as prescribed in ch. 227.

History: 1979 c. 221; 1985 a. 60; 1987 a. 374; 1995 a. 227; 2003 a. 118; 2007 a. 227.

Cross−reference: See also chs. NR 142 and 305, Wis. adm. code.

This section is to be strictly construed. Any diversion of water lawful at common law is permitted without a permit unless it is for irrigation, agriculture, or to maintain normal water levels. State ex rel. Chain O'Lakes Protective Association v. Moses, 53 Wis. 2d 579, 193 N.W.2d 708.

This section applies to diversions from nonnavigable, as well as from navigable, streams. Omernik v. State, 64 Wis. 2d 6, 218 N.W.2d 734 (1974).

The legislature abrogated the common law riparian right of irrigation and substituted the permit procedure under sub. (3). Omernick v. DNR, 71 Wis. 2d 370, 238 N.W.2d 114 (1974).

Section 94.26 exempts cranberry growers from permit requirements of this section. State v. Zawistowski, 95 Wis. 2d 250, 290 N.W.2d 303 (1980).

30.19 Enlargement and protection of waterways.

(1b) DEFINITION. In this section:

(a) "Artificial water body" means a proposed or existing body of water that does not have a history of being a lake or stream or of being part of a lake or stream.

(b) "Bank" means either of the following:

1. Land area that is, in size, the greater of the following:

a. The portion of land surface that extends 75 feet landward from the ordinary high−water mark of any navigable waterway.

b. The portion of land surface extending landward from the ordinary high−water mark of any navigable waterway to the point where the slope is less than 12 percent.

2. A bank as determined by the department by rule under sub. (1d).

(c) "Priority navigable waterway" means any of the following:

1. A navigable waterway, or a portion of a navigable waterway, that is identified as an outstanding or exceptional resource water under s. 281.15.

2. A navigable waterway, or a portion of a navigable waterway, identified as a trout stream.

3. A lake that is less than 50 acres in size.

4. Any other navigable waterway, or portion of a navigable waterway, that the department has determined, by rule, contains sensitive fish and aquatic habitat and that the department has specifically identified by rule.

(1c) DEFINITION; APPLICABILITY. The definition of "bank" under sub. (1b) does not apply after the 90th day after the day the rule under sub. (1d) is submitted to legislative council staff under s. 227.15 (1) or the day that the rule promulgated under sub. (1d) goes into effect, whichever is earlier.

(1d) RULES; BANKS OF NAVIGABLE WATERWAYS. (a) The department shall promulgate a rule to determine what constitutes a bank for purposes of this section in accordance with all of the following:

1. For priority navigable waterways, the department shall promulgate a rule stating that a bank is, in size, the greater of the following:

a. The portion of land surface that extends a certain distance landward from the ordinary high−water mark of the navigable waterway, but the distance under the rule may not exceed 300 feet.

b. The portion of land surface that extends landward from the ordinary high−water mark of the navigable waterway to the point where the slope is measured to be a certain percentage, but the percentage under the rule may not be less than 10 percent.

1m. The rule promulgated under subd. 1. may apply to specific priority navigable waterways or to classes of priority navigable waterways.

2. For navigable waterways that are not priority navigable waterways, the department shall promulgate a rule stating that a bank is, in size, the greater of the following:

a. The portion of the land surface that extends a certain distance landward from the ordinary high−water mark of the navigable waterway, but the distance under the rule may not exceed 75 feet.

b. The portion of land surface that extends landward from the ordinary high−water mark of the navigable waterway to the point where the slope is measured to be a certain percentage, but the percentage under the rule may not be less than 12 percent.

2m. The rule promulgated under subd. 2. may apply to specific navigable waterways or to classes of navigable waterways.

(am) The rule under this subsection may not require or allow the department to deviate from, or create an exemption from, the requirements of the rules promulgated under this section in determining what constitutes a bank at an individual, specific site.

(b) In promulgating the rule under this subsection, the determination under this subsection of what constitutes a bank may not include any land where the slope or drainage of the land into the navigable waterway is completely interrupted.

(c) To the extent practicable, the rule under this subsection shall be consistent with rules promulgated by the department that relate to shorelands, as defined in s. 59.692 (1) (b), and floodplains, and rules promulgated under s. 281.16 (2) that relate to protective areas for wetlands and waterways.

(d) In promulgating the rule under this subsection, the department shall consider public rights and interests for the purpose of furthering the public trust in navigable waters.

(1g) PERMITS REQUIRED. Unless an individual or a general permit has been issued under this section or authorization has been granted by the legislature, no person may do any of the following:

(a) Construct, dredge, or enlarge any artificial water body that connects with a navigable waterway.

(am) Construct, dredge, or enlarge any part of an artificial water body that is located within 500 feet of the ordinary high−water mark of an existing navigable waterway, including a stormwater management pond that does not discharge into a navigable waterway except as a result of storm events.

(c) Grade or remove topsoil from the bank of any navigable waterway where the area exposed by the grading or removal will exceed 10,000 square feet.

(1m) EXEMPTIONS. A person is exempt from the permit requirements under this section for any of the following:

(a) The construction or repair of any public highway.

(b) Any agricultural use of land.

(c) An activity that affects a navigable inland lake that is located wholly or partly in any county having a population of 750,000 or more.

(cm) Any activity that affects a portion of Lake Michigan or of Lake Superior that is located within a county having a population of 750,000 or more.

(d) Any activity that affects a portion of a navigable stream that is located within a county having a population of 750,000 or more.

(e) Any work required to maintain the original dimensions of an enlargement of an artificial water body done pursuant to a permit or legislative authorization under sub. (1g) (a) or (am).

(3r) GENERAL PERMITS. (a) The department shall issue statewide general permits under s. 30.206 that authorize persons to do all of the following:

1. Engage in an activity specified in sub. (1g) (am) substantially in accordance with best management practices required for storm water discharge permits under ch. 283.

2. Engage in an activity specified in sub. (1g) (c).

Electronic reproduction of 2009−10 Wis. Stats. database, current through 2011 Wis. Act 39 and July 25, 2011.

(b) The department may promulgate rules that specify other types of activities, in addition to those listed in par. (a), that may be authorized by statewide general permits.

(4) INDIVIDUAL PERMITS. (a) For activities that are not exempt under sub. (1m) and that are not subject to a general permit under sub. (3r), a person may apply to the department for an individual permit in order to engage in an activity for which a permit is required under sub. (1g).

(b) The notice and hearing provisions of s. 30.208 (3) to (5) apply to an application under par. (a).

(c) The department shall issue an individual permit pursuant to an application under par. (a) if the department finds that all of the following apply:

1. The activity will not be detrimental to the public interest.

2. The activity will not cause environmental pollution, as defined in s. 299.01 (4).

3. Any enlargement connected to a navigable waterway complies with all of the laws relating to platting of land and sanitation.

4. No material injury will result to the riparian rights of any riparian owners of real property that abuts any water body that is affected by the activity.

(5) REQUIREMENT FOR PUBLIC ACCESS. A permit issued under this section to construct an artificial water body and to connect it to a navigable waterway shall require that the navigable portion of the artificial water body be a public waterway if the connecting portion is navigable. The department may impose such further conditions in the permit on public access as it finds reasonably necessary to protect public health, safety, welfare, rights and interest and to protect private rights and property.

History: 1971 c. 273; 1979 c. 34 s. 2102 (39) (g); 1979 c. 221; 1983 a. 36; 1987 a. 374; 1995 a. 227; 2003 a. 118.

Cross−reference: See also chs. NR 305, 340, 341, 343, and 353, Wis. adm. code.

The DNR has subject matter jurisdiction to issue after−the−fact permits, as well as those issued prior to the commencement of construction. Capoun Revocable Trust v. Ansari, 2000 WI App 83, 234 Wis. 2d 335, 610 N.W.2d 129, 99−1146.

The only specific exemption from the jurisdiction of the DNR over navigable waters is that of s. 30.19 (1) (d) [now s. 30.19 (1m)], concerning agricultural uses of land. The department determines dam regulations for dams on drainage ditches, regardless of the purpose of the dam. 63 Atty. Gen. 355.

When a bulkhead line has been established, a riparian owner must nonetheless obtain a permit or contract pursuant to s. 30.20 prior to removing material from the bed of a navigable water landward of the bulkhead line, but within the original ordinary high water mark. 63 Atty. Gen. 445.

NOTE: The above annotated materials cite to the pre− 2003 Wisconsin Act 118 version of s. 30.19.

30.195 Changing of stream courses. (1) PERMIT REQUIRED. Unless a permit has been issued under this section or authorization has been granted by the legislature, no person may change the course of or straighten a navigable stream.

(2) INDIVIDUAL PERMITS. (a) A riparian owner shall apply to the department for an individual permit in order to engage in activities for which a permit is required under sub. (1).

(b) The notice and hearing provisions of s. 30.208 (3) to (5) apply to an application under par. (a).

(c) The department shall issue an individual permit applied for under this section to a riparian owner if the department determines that all of the following apply:

1. The applicant is the owner of any land upon which the change in course or straightening of the navigable stream will occur.

2. The proposed change of course or straightening of the navigable stream will improve the economic or aesthetic value of the applicant's land.

3. The proposed change of course or straightening of the navigable stream will not adversely affect the flood flow capacity of the stream or otherwise be detrimental to the public interest.

4. The proposed change of course or straightening of the navigable stream will not be detrimental to the rights of other riparian owners located on the stream or all of these riparian owners have consented to the issuance of the permit.

(4) LIABILITY FOR NEGLIGENCE. No common law liability, and no statutory liability which may be provided elsewhere in these statutes, for damages resulting from the changing of the course of or from the straightening of a stream is in any manner affected by this section, nor does this section create any liability on the part of the state for any such damages, but a person who changes the course of a stream or straightens a stream in accordance with a permit granted pursuant to this section is presumed to have exercised due care in such changing or straightening.

(7) APPLICATION OF SECTION. This section does not apply to municipal or county−owned lands in counties having a population of 750,000 or more.

History: 1987 a. 374; 2003 a. 118.

Cross−reference: See also chs. NR 305, 340, and 353, Wis. adm. code.

The elements of proof required for a conviction under sub. (1) are discussed. 67 Atty. Gen. 265.

30.196 Enclosure of navigable waters; issuance of permits to municipalities. A municipality may enclose navigable waters by directing, placing or restricting navigable waters into an enclosed drain, conduit, storm sewer or similar structure if the department grants the municipality an individual permit. The department may grant this permit to a municipality after following the notice and hearing requirements under s. 30.208 (3) to (5) if it finds that granting the permit:

(1) Is in the public interest;

(2) Will not violate public rights; and

(3) Will not endanger life, health or property.

History: 1981 c. 19; 1987 a. 374; 2003 a. 118.

30.20 Removal of material from beds of navigable waters. (1) PERMITS OR CONTRACTS REQUIRED. (a) Unless a contract has been entered into with the department under sub. (2) (a) or (b) or authorization has been granted by the legislature, no person may remove any material from the bed of a natural navigable lake or from the bed of any outlying waters.

(b) Unless an individual or a general permit has been issued by the department under this section or authorization has been granted by the legislature, no person may remove any material from the bed of any lake or navigable stream that is not described under par. (a).

(1g) EXEMPTIONS. (a) 1. A removal of material from the bed of a farm drainage ditch which was not a navigable stream before ditching is exempt from the individual and general permit requirements under this section unless the department finds that the proposed removal may have a long−term adverse effect on cold−water fishery resources or may destroy fish spawning beds or nursery areas.

2. A person who proposes a removal under subd. 1. which may have an effect on cold−water fishery resources or may affect fish spawning beds or nursery areas shall notify the department at least 10 days prior to the removal.

(b) A removal of material is exempt from the permit and contract requirements under this section if the material does not contain hazardous substances, the material is not being removed from an area of special natural resource interest, and if any of the following applies:

1. The removal is the amount necessary to place or maintain a structure that is exempt from any permitting requirements in this chapter.

2. The removal is by hand or by hand−held devices without the use or aid of external or auxiliary power.

(c) A removal of material by the drainage board for the Duck Creek Drainage District from a drain that the board operates in the Duck Creek Drainage District is exempt from the individual and general permit requirements under this section if the removal is required, under rules promulgated by the department of agriculture, trade and consumer protection, in order to conform the drain to specifications imposed by the department of agriculture, trade

Electronic reproduction of 2009−10 Wis. Stats. database, current through 2011 Wis. Act 39 and July 25, 2011.

and consumer protection after consulting with the department of natural resources.

(1k) RULES. (a) The department may promulgate rules concerning the exempt activities under sub. (1g) that only do any of the following:

1. Establish reasonable procedures for undertaking the removal of material to minimize environmental impacts.

2. Establish reasonable limitations on the location of the removal of material at the site affected by the activity.

(b) Notwithstanding par. (a), the rules under par. (a) 1. may not establish procedures that prohibit undertaking the removal of material or that render the undertaking of the removal of material economically cost−prohibitive.

(1m) PERMITS OR CONTRACTS IN LIEU OF EXEMPTIONS. The department may decide to require that a person engaged in an activity that is exempt under sub. (1g) apply for an individual permit or contract, or seek authorization under a general permit if the department has conducted an investigation and visited the site of the activity and has determined that conditions specific to the site require restrictions on the activity in order to prevent any of the following:

(a) Significant adverse impacts to the public rights and interests.

(b) Environmental pollution, as defined in s. 299.01 (4).

(c) Material injury to the riparian rights of any riparian owner.

(1r) EXEMPTION DETERMINATIONS. (a) A person may submit to the department a written statement requesting that the department determine whether a proposed activity is exempt under sub. (1g). The statement shall contain a description of the proposed activity and site and shall give the department consent to enter and inspect the site.

(b) The department shall do all of the following within 15 days after receipt of a statement under par. (a):

1. Enter and inspect the site on which the activity is located, subject to s. 30.291, if the department determines such an inspection is necessary.

2. Make a determination as to whether the activity is exempt.

3. Notify in writing the person submitting the statement of which general permit or individual permit will be required, or whether a contract will be required, if the department determines that the activity is not exempt.

(c) If the department does not take action under par. (b), the department may not require at any time that the person proposing to engage in the activity apply for an individual permit, seek authorization under a general permit, or apply to enter a contract unless required to do so by a court or hearing examiner.

(d) If a statement under par. (a) is not given or if the statement does not give consent to inspect, the 15−day time limit under par. (b) does not apply.

(1t) GENERAL PERMITS. (a) The department shall issue statewide general permits under s. 30.206 that authorize any person to remove material for maintenance purposes from an area from which material has been previously removed.

(am) No person may be authorized to proceed under a general permit issued under par. (a) unless the person has demonstrated to the department that material has been previously removed from the area for which the person has requested authorization to proceed.

(b) The department may promulgate rules that specify other types of removals, in addition to the one listed in par. (a), that may be authorized by statewide general permits.

(2) CONTRACTS AND INDIVIDUAL PERMITS. (a) The department may enter into a contract on behalf of the state for the removal and lease or sale of any material from the bed of any navigable lake or of any outlying waters if the contract is consistent with public rights. A person seeking to enter into such a contract shall apply to the department. Each contract entered into under this paragraph shall contain any conditions that the department determines are necessary for the protection of the public interest and the interests of the state. Each contract entered into under this paragraph shall also fix the amount of compensation to be paid to the state for the material to be removed, except that the contract may not require that any compensation be paid for material if the material will not be resold. Each contract entered into under this paragraph may not run for more than 5 years. The department may allow one extension of a contract entered into under this paragraph, upon application to the department. The extension shall be for the same period as the original contract.

(b) The department may enter into a contract on behalf of the state for the removal and lease or sale of any mineral, ore, or other material from beneath the bed of a navigable water that the state may own if the contract will be consistent with public rights and if the navigable water will not be disturbed in the removal operation. A person seeking to enter into such a contract shall apply to the department. Each contract entered into under this paragraph shall contain any conditions that the department determines are necessary for the protection of the public interest and the interest of the state. Each contract entered into under this paragraph shall also fix the compensation to be paid to the state for the mineral, ore, or other material to be removed. Each contract entered into under this paragraph may not run for more than 75 years. Should any doubt exist as to whether the state, in fact, owns such lake bed or stream bed such contract or lease shall be for such interests, if any, as the state may own. Title to the royalties to be paid when mining operations are begun shall be determined at such future time as royalties for ores so sold are paid or are due and payable.

(bn) For a removal that is not exempt under sub. (1g) and that is not subject to a general permit under sub. (1t), a person may apply to the department for an individual permit that is required under sub. (1) (b) in order to remove material from the bed of any lake or stream not described under sub. (1) (a).

(c) The department shall issue an individual permit pursuant to an application under par. (bn) if the department finds that the issuance of the permit will be consistent with the public interest in the lake or stream.

(d) If an applicant for a permit under par. (bn) submits the application at least 30 days before the proposed date of the removal, the department may issue the permit for a period of up to 10 years. The department may allow one extension of a permit issued under this paragraph, upon application to the department. The extension shall be for the same period of time as the original permit.

(e) The notice and hearing provisions of s. 30.208 (3) to (5) apply to an application for a permit or contract under this subsection.

History: 1977 c. 391; 1979 c. 34 s. 2102 (39) (g); 1981 c. 330; 1983 a. 27 s. 2202 (38); 1985 a. 332 s. 251 (1); 1987 a. 374; 1999 a. 9, 185; 2003 a. 118.

Cross−reference: See also chs. NR 305, 320, 323, 345, 346, 347, and 353, Wis. adm. code.

Before proceeding to remove an obstruction under s. 88.90 (3), one must obtain a permit under s. 30.20. State v. Dwyer, 91 Wis. 2d 440, 283 N.W.2d 448 (Ct. App. 1979).

When a bulkhead line has been established, a riparian owner must nonetheless obtain a permit or contract pursuant to 30.20 prior to removing material from the bed of a navigable water landward of the bulkhead line, but within the original ordinary high water mark. 63 Atty. Gen. 445.

NOTE: The above annotated materials cite to the pre− 2003 Wisconsin Act 118 version of s. 30.20.

30.201 Financial assurance for nonmetallic mining. (1) If the department requires that financial assurance be provided as a condition for a permit under s. 30.19, 30.195, or 30.20 or for a contract under s. 30.20 for nonmetallic mining and reclamation, the financial assurance may be a bond or alternative financial assurance. An alternative financial assurance may include cash or any of the following:

(a) A certificate of deposit.

(b) An irrevocable letter of credit.

(c) An irrevocable trust.

Electronic reproduction of 2009−10 Wis. Stats. database, current through 2011 Wis. Act 39 and July 25, 2011.

(d) An escrow account.

(e) A government security.

(f) Any other demonstration of financial responsibility.

(2) Any interest earned by the financial assurance shall be paid to the person operating the nonmetallic mining or reclamation project.

History: 2003 a. 118.

30.202 Dredge disposal in and near the Mississippi, St. Croix and Black rivers by the U.S. corps of engineers. (1) MEMORANDUM OF UNDERSTANDING. The department may enter into a memorandum of understanding with the U.S. corps of engineers concerning the dredging of the Mississippi, St. Croix and Black rivers and the disposal of these dredge spoils. Any memorandum of understanding shall specify approved sites where dredge spoils may be deposited and shall specify conditions and standards which are required for use of an approved site. A memorandum of understanding may contain recommended or required dredge disposal methods, equipment and policies.

(2) AUTHORIZATION FOR DREDGING AND DREDGE SPOIL DISPOSAL. If the department enters into a memorandum of understanding with the U.S. corps of engineers under sub. (1), the U.S. corps of engineers may deposit dredge spoils from dredging the Mississippi, St. Croix and Black rivers at approved sites according to specified conditions and standards including any special conditions and standards established under sub. (4).

(3) EXEMPTION FROM STATUTES AND RULES. Dredge spoil disposal activities authorized under sub. (2) are exempt from any prohibition, restriction, requirement, permit, license, approval, authorization, fee, notice, hearing, procedure or penalty specified under s. 29.601, 30.01 to 30.20, 30.21 to 30.99, 59.692 or 87.30 or chs. 281 to 285 or 289 to 299 or specified in any rule promulgated, order issued or ordinance adopted under those sections or chapters.

(4) HAZARDOUS WASTE DREDGE SPOIL DISPOSAL. In consultation with the U.S. corps of engineers, the department shall establish special conditions and standards for the disposal of dredge spoils which are hazardous waste, as defined under s. 291.01 (7). These special conditions and standards shall be established to ensure that public health and the environment are protected.

History: 1981 c. 240; 1995 a. 201, 227; 1997 a. 35, 248; 2005 a. 347.

NOTE: Chapter 240, laws of 1981, which created this section, has "legislative findings" in section 1.

NOTE: 2005 Wis. Act 347, which affected this section, contains extensive explanatory notes.

30.2022 Activities of department of transportation. (1) Activities affecting waters of the state, as defined in s. 281.01 (18), that are carried out under the direction and supervision of the department of transportation in connection with highway, bridge, or other transportation project design, location, construction, reconstruction, maintenance, and repair are not subject to the prohibitions or permit or approval requirements specified under s. 29.601, 30.11, 30.12, 30.123, 30.19, 30.195, 30.20, 59.692, 61.351, 62.231, or 87.30 or chs. 281 to 285 or 289 to 299. However, at the earliest practical time prior to the commencement of these activities, the department of transportation shall notify the department of the location, nature, and extent of the proposed work that may affect the waters of the state.

(2) The exemption under sub. (1) does not apply unless the activity is accomplished in accordance with interdepartmental liaison procedures established by the department and the department of transportation for the purpose of minimizing the adverse environmental impact, if any, of the activity.

(3) If the department determines that there is reasonable cause to believe that an activity being carried out under this section is not in compliance with the environmental protection requirements developed through interdepartmental liaison procedures, it shall notify the department of transportation. If the secretary and the secretary of transportation are unable to agree upon the methods or time schedules to be used to correct the alleged noncompliance, the secretary, notwithstanding the exemption provided in this section, may proceed with enforcement actions as the secretary deems appropriate.

(4) The department of transportation and the department shall exchange information and cooperate in the planning and carrying out of such activities in order to alleviate, to the extent practical under the circumstances, any potential detrimental encroachment on the waters of the state.

(5) Except as may be required otherwise under s. 1.11, no public notice or hearing is required in connection with any interdepartmental consultation and cooperation under this section.

(6) This section does not apply to activities in the Lower Wisconsin State Riverway, as defined in s. 30.40 (15).

History: 2003 a. 118 ss. 48 to 53, 129; 2005 a. 347.

NOTE: 2005 Wis. Act 347, which affected this section, contains extensive explanatory notes.

30.2023 Seawalls; Wolf River and Fox River basins. A riparian owner is exempt from the permit requirements under s. 30.12 for a structure that is placed on the bed of a navigable water in the Wolf River and Fox River basin area, as described in s. 30.207 (1), and that extends beyond the ordinary high−water mark, if the following conditions apply:

(1) The structure is a vertical wall designed to prevent land from eroding into a navigable water.

(2) The structure is not a replacement for an existing structure and is placed on the bed of an artificial enlargement of a navigable water, or the structure is a replacement for an existing structure placed on the bed of a navigable water, including the bed of an artificial enlargement of a navigable water.

(3) If the structure is a replacement for an existing structure placed on the bed of a navigable water, including the bed of an artificial enlargement of a navigable water, it is placed not more than 2 feet waterward of the structure that it is replacing.

(4) The structure incorporates adequate bracing and anchors to ensure structural stability.

(5) A filter fabric lining containing a layer of gravel extends from the landward side of the structure to facilitate drainage.

(6) The base of the structure extends to a sufficient depth into the bed of the navigable water to ensure the structure's stability and to prevent the structure from failing.

(7) The structure is secured into the bank of the navigable water in a manner that prevents erosion or scouring.

(8) The riparian owner places riprap at the base of the waterward side of the structure up to the waterline or, if the structure is placed in a location where watercraft are moored, the riparian owner places riprap at the base of the waterward side of the structure up to a point that allows adequate space for the mooring of watercraft.

(9) The structure is constructed of treated wood and built so that the top of the structure meets the lower of the following:

(a) The natural topography of the bank of the navigable water.

(b) A point that is 4 feet above the ordinary high−water mark of the navigable water.

(c) The minimum height required to prevent overtopping by wave action.

History: 2003 a. 118 ss. 42, 43.

30.2025 Lake Koshkonong comprehensive project. (1) DEFINITION. In this section, "district" means the Rock−Koshkonong public inland lake protection and rehabilitation district.

(2) AUTHORIZATION. The district may implement a project developed and approved by the U.S. army corps of engineers to place structures, or fill, or both on the bed of Lake Koshkonong for any of the following purposes:

(a) To improve navigation or to provide navigation aids.

(b) To restore or protect wetland habitat or water quality.

(c) To create, restore, or protect fish and wildlife habitat.

Electronic reproduction of 2009−10 Wis. Stats. database, current through 2011 Wis. Act 39 and July 25, 2011.

(d) To enhance the natural aesthetic value or improve the recreational use of the lake.

(3) LOCATION OF STRUCTURES AND FILL. Any structure or fill placed as part of the project authorized under sub. (2) shall be located in Lake Koshkonong within the area that consists of Secs. 10, 13, 18, 19, 20, 24, 33, and 35, T 5 N., R 13.

(4) PRELIMINARY REQUIREMENTS. (a) Before beginning any activity involving the placement of a structure or fill as part of the project authorized under sub. (2), the district shall submit plans and specifications for the project to the department and obtain the department's approval for the project.

(b) Before the department gives its approval for a project authorized under sub. (2), the department shall do all of the following:

1. Comply with the requirements under s. 1.11.

2. Review the plans and specifications submitted to the department under par. (a) and obtain any other information that it determines is necessary to effectively evaluate the structural and functional integrity of the structure or fill.

3. Hold a public informational meeting to discuss the plans and specifications submitted under par. (a).

4. Determine that the structure or fill is structurally and functionally sound and that the structure or fill will comply with the requirements under sub. (5).

(5) REQUIREMENTS FOR STRUCTURES AND FILL. A structure or fill placed as part of a project authorized under sub. (2) shall meet all of the following requirements:

(a) It may not materially affect the flood flow capacity of the Rock River.

(b) It may not materially obstruct navigation.

(c) It may not cause material injury to the rights of an owner of lands underlying the structure or fill or to the rights of a riparian owner who owns lands affected by the project.

(d) It may not cause environmental pollution, as defined in s. 299.01 (4).

(e) It may not be detrimental to the public interest.

(f) It must further a purpose specified in sub. (2).

(6) MAINTENANCE BY THE DISTRICT. (a) The district shall maintain the structures and the fill that are part of the project authorized under sub. (2) to ensure that the structures and fill do not impair the safety of the public.

(b) The district shall maintain the structures and the fill that are part of the project authorized under sub. (2) so that the structures and fill remain in compliance with the requirements listed under sub. (5).

(c) If the department determines that any structure or any fill that is part of the project authorized under sub. (2) does not comply with the requirements under sub. (5), the department may require the district to modify the structure or fill to bring it into compliance or to remove the structure or fill.

(7) USE OF STRUCTURES OR FILL. Any structure or fill placed as part of the project authorized under sub. (2) may be used only for any of the following:

(a) As a site for the placement of navigation aids approved by the department.

(b) Activities to protect or improve wildlife or fish habitat, including the placement of fish or wildlife habitat structures approved by the department.

(c) Open space for recreational activities.

(8) OWNERSHIP. (a) The structures or fill that are part of the project authorized under sub. (2) are owned by the district. Except as provided in par. (b), the district may not transfer ownership of any structure or any fill that is part of the project authorized under sub. (2).

(b) The district may transfer ownership of any structure or fill that is part of the project authorized under sub. (2) if all of the following apply:

1. The district transfers ownership of the structure or fill to a public entity, as defined by the department by rule.

2. Before transferring ownership of the structure or fill, the district obtains written approval of the transfer from the department.

(9) ACCESS TO PROPERTY. An employee or agent of the department shall have free access during reasonable hours to the structures or fill that are part of the project authorized under sub. (2) for the purpose of inspecting the structures or fill to ensure that the project is in compliance with the requirements of this section. If the department determines that any structure or any fill that is part of the project authorized under sub. (2) does not comply with the requirements of this section, the department may require the owner of the structure or fill to modify the structure or fill to bring it into compliance or to remove the structure or fill.

(10) EXEMPTIONS. Section 30.12 does not apply to activities that are necessary for the implementation or maintenance of the project authorized under sub. (2).

History: 2001 a. 16.

30.2026 Lake Belle View and Sugar River project. **(1)** AUTHORIZATION. (a) Subject to the restrictions under sub. (2), the village of Belleville may place fill on all or part of the portion of the bed of Lake Belle View located in Dane County for any of the following purposes:

1. Improving fish and wildlife habitat.

2. Creating and enhancing wetlands.

3. Improving the water quality of Lake Belle View and the Sugar River.

4. Enhancing the recreational use and aesthetic enjoyment of Lake Belle View and the Sugar River.

5. Separating Lake Belle View from the Sugar River by creating an artificial barrier from lake bottom sediments or by other means.

6. Creating suitable lake bottom depths or contours in Lake Belle View.

7. Promoting the growth of desirable wetland plants.

(b) Any lake bottom sediments that are unsuitable for the creation of an artificial barrier under par. (a) 5. may be placed in any agricultural field that is adjacent to Lake Belle View.

(c) If the village of Belleville creates an artificial barrier from lake bottom sediments under par. (a) 5., the village of Belleville shall also place lake bottom sediments in adjacent areas for the purpose of creating and enhancing wetlands.

(2) REQUIREMENTS. (a) The village of Belleville shall obtain approval from the department for any placement of fill material as authorized under sub. (1).

(b) The village of Belleville shall submit to the department any plans or other information that the department considers necessary for it to effectively determine whether to grant approval under par. (a).

(c) The village of Belleville shall ensure that all of the following apply to any artificial barrier created as authorized under sub. (1).

1. The barrier does not materially obstruct navigation or reduce the effective flood flow capacity of a stream.

2. The barrier is not detrimental to the public interest.

3. The barrier is owned by a public entity and the public is granted free access to the barrier.

4. Access by the public to the barrier is limited to use as open space for recreational purposes.

5. The barrier remains in as natural a condition as is practicable, as determined by the department.

6. No structure, except those necessary in order to effectuate a purpose specified in sub. (1) (a), are placed on the barrier.

(d) The village of Belleville shall create any artificial barrier under this section in compliance with all state laws that relate to navigable bodies of water, except s. 30.12.

2009−10 Wis. Stats. database updated and current through 2011 Wis. Act 39 and July 25, 2011. Statutory changes effective on or prior to 9−1−11 are printed as if currently in effect. Statutory changes effective after 9−1−11 are designated by NOTES. See Are The Statutes on this Website Official?

Electronic reproduction of 2009−10 Wis. Stats. database, current through 2011 Wis. Act 39 and July 25, 2011.

(3) CONDITIONS. (a) The village of Belleville shall maintain any artificial barrier created as authorized under sub. (1). If a landowner of more than 500 feet of Lake Belle View shoreline, a portion of which is located within 1,000 feet of any such artificial barrier, is dissatisfied with the manner in which the village of Belleville is maintaining the barrier, the owner may maintain the barrier in lieu of the village, upon approval of the department. The village or a landowner who maintains the barrier shall comply with all state laws that relate to navigable bodies of water, except s. 30.12. The department may require the village of Belleville or the landowner to maintain the barrier in a structurally and functionally adequate condition.

(b) The village of Belleville shall ensure that any construction draw down of Lake Belle View related to the creation of any artificial barrier authorized under sub. (1) occurs only once.

(4) COSTS. Any costs incurred by the state to construct, maintain, improve, or remove any artificial barrier created as authorized under sub. (1) shall be paid by the village of Belleville or its successors or assigns.

(5) IMMUNITY. The state and its officers, employees, and agents are immune from liability for acts or omissions that cause damage or injury and that relate to the construction, maintenance, or use of any artificial barrier created as authorized under sub. (1).

History: 2001 a. 16; 2003 a. 118.

30.203 Lake Winnebago comprehensive project. **(1)** AUTHORIZATION. The department may implement a project to place structures or fill or both on the beds of lakes Winnebago, Butte des Morts, Winneconne and Poygan for any of the following purposes:

(a) To improve navigation or to provide navigation aids.

(b) To restore or protect wetland habitat or water quality.

(c) To create, restore or protect fish and wildlife habitat.

(d) To enhance the natural aesthetic value or improve the recreational use of these lakes.

(2) LOCATION OF STRUCTURES AND FILL. Any structure or fill placed as part of the project authorized under sub. (1) shall be located in Winnebago County as follows:

(a) In Lake Winnebago within the area that consists of the S−1/2 of Sec. 14, T. 17 N., R. 17 E., and the N−1/2 of Sec. 23, T. 17 N., R. 17 E.

(b) In Lake Butte des Morts within an area that consists of the N−1/2 of Secs. 1 and 2, T. 18 N., R. 15 E., the S−1/2 of Secs. 25, 26 and 27, T. 19 N., R. 15 E., the E−1/2 of Sec. 34, T. 19 N., R. 15 E., and Secs. 35 and 36, T. 19 N., R. 15 E.

(c) In Lake Winneconne and Lake Poygan within an area that consists of the W−1/2 of Secs. 6 and 7, T. 19 N., R. 15 E.; the E−1/2 of Secs. 1 and 12 and the NE−1/4 of Sec. 2, T. 19 N., R. 14 E.; and the S−1/2 of Sec. 26, the SE−1/4 of Sec. 27, and the E−1/2 of Sec. 35, T. 20 N., R. 14 E.

(d) In Lake Poygan within an area that consists of the W−1/2 of Sec. 36, T. 20 N., R. 14 E.; the NW−1/4 of Sec. 1, T. 19 N., R. 14 E.; the E−1/2 of Sec. 33, all of Sec. 34, and the W−1/2 of Sec. 35, T. 20 N., R. 14 E.; and the N−1/2 of Sec. 4, T. 19 N., R. 14 E.

(3) PRELIMINARY REQUIREMENTS. (a) Before beginning any activity involving the placement of a structure or fill as part of the project authorized under sub. (1), the department shall do all of the following:

1. Comply with the requirements under s. 1.11.

2. Prepare plans and gather any other information necessary to effectively evaluate the structural and functional integrity of the structure or fill.

3. Hold a public informational meeting to discuss the plans prepared under subd. 2.

4. Approve the project if it finds that the structure or fill is structurally and functionally sound and that the structure or fill will comply with the requirements under sub. (4).

(b) The department shall determine the manner in which and to whom notice will be given of the public informational meeting held under par. (a) 3.

(4) REQUIREMENTS FOR STRUCTURES AND FILL. A structure or fill placed as part of the project authorized under sub. (1) shall meet all of the following requirements:

(a) It may not reduce the effective flood flow capacity of the Wolf River or the Fox River above the point where the Fox River flows into Lake Butte des Morts.

(b) It may not materially obstruct navigation.

(c) It may not cause material injury to the rights of a riparian owner who owns land that abuts a navigable waterway that is affected by the project.

(d) It may not cause environmental pollution, as defined in s. 299.01 (4).

(e) It may not be detrimental to the public interest.

(f) It must further a purpose specified in sub. (1).

(5) OVERSIGHT AND MAINTENANCE BY THE DEPARTMENT. (a) The department shall monitor the project authorized under sub. (1) to assure that the project is furthering a purpose specified in sub. (1).

(b) The department shall maintain the structures and the fill that are part of the project authorized under sub. (1) to assure that the structures and fill do not impair the safety of the public.

(c) The department shall maintain the structures and the fill that are part of the project authorized under sub. (1) in a manner that does not impair the natural aesthetic value of the area, to the extent practicable.

(d) The department shall maintain the structures and the fill that are part of the project authorized under sub. (1) so that they remain in compliance with the requirements listed under sub. (4).

(e) If the department determines that any structure or any fill that is part of the project authorized under sub. (1) does not comply with the requirements under sub. (4), the department shall modify the structure or fill to bring it into compliance. If the department cannot modify the structure or fill to bring it into compliance, the department shall remove the structure or fill.

(6) USE OF STRUCTURES OR FILL. (a) Any structure or fill placed as part of the project authorized under sub. (1) may be used only for any of the following:

1. As a site for the placement of navigation aids approved by the department.

2. Activities to protect or improve wildlife or fish habitat, including the placement of fish or wildlife habitat structures approved by the department.

3. Open space for recreational activities.

(b) The department may promulgate rules to reasonably limit use by the public under par. (a) 3.

(7) OWNERSHIP; JURISDICTION. The structures or fill that are part of the project authorized under sub. (1) are owned by the state and are under the jurisdiction of the department. The state may not transfer ownership of a structure or any fill that is part of the project authorized under sub. (1).

(8) EXEMPTIONS. Section 30.12 does not apply to activities that are necessary for the implementation or maintenance of the project authorized under sub. (1).

(9) FUNDING. Funding for this project shall be paid from the appropriations under ss. 20.370 (1) (mu) and 20.866 (2) (tr) and (tu).

History: 1991 a. 39; 1995 a. 27, 227; 2005 a. 25; 2007 a. 20.

30.2035 Shoreline protection study. The department shall conduct a study on shoreline protection measures, including the use of seawalls, and on the environmental impact that these measures may have. No later than June 1, 1996, the department shall complete the study and shall distribute the results of the study, including the department's findings and recommendations, to the

Electronic reproduction of 2009−10 Wis. Stats. database, current through 2011 Wis. Act 39 and July 25, 2011.

appropriate standing committees of the legislature in the manner provided under s. 13.172 (3). The recommendations shall include any proposed legislation or rules that are necessary to implement the recommendations. Any rules that the department proposes to implement the recommendations of the study shall be submitted for review by the legislative council staff under s. 227.15 (1) no later than 7 months after the study is completed.

History: 1993 a. 421.

30.2037 Big Silver Lake high−water mark. The ordinary high−water mark of Big Silver Lake in the town of Marion in Waushara County shall be set by the department at 867 feet above mean sea level as determined under U.S. geological survey standards.

History: 1997 a. 27.

30.204 Lake acidification experiment. (1) AUTHORIZATION. Between May 15, 1984, and January 1, 2008, the department is authorized to conduct a lake acidification experiment on the lake specified under sub. (2).

(2) LAKE SELECTION. The department shall select Little Rock Lake in the town of Arbor Vitae, Vilas County, township 41 north, range 6 east, for the lake acidification experiment.

(3) EXPERIMENT. In conducting the lake acidification experiment, the department shall deny access to and prohibit navigation on the lake by posted notice, may place a barrier or dyke across the lake, may place chemicals or other substances in the lake and may take other actions necessary for the experiment.

(4) RESTORATION. (a) Before artificially acidifying the lake, the department shall establish an escrow account containing sufficient funds to restore the lake and its aquatic life as provided under par. (c).

(b) After the department has artificially acidified the lake, it may allow and monitor the natural restoration of the lake and its aquatic life as part of the experiment.

(c) At the conclusion of the experiment or in the event of an unanticipated occurrence that requires that the lake be restored before the conclusion of the experiment, the department shall do all of the following to the fullest extent possible given available technology:

1. Artificially restore the lake to its original acid level if the lake has not been naturally restored to the original acid level during the experiment.

2. Artificially reestablish the lake's aquatic life if the aquatic life has not been naturally reestablished during the experiment.

(5) EXEMPTION FROM CERTAIN STATUTES AND RULES. Activities of the department in conducting the lake acidification experiment are exempt from any prohibition, restriction, requirement, permit, license, approval, authorization, fee, notice, hearing, procedure or penalty specified under s. 29.601 (3), 30.01 to 30.03, 30.06 to 30.16, 30.18 to 30.29, 30.50 to 30.99, 59.692, 87.30, 287.81, 299.15 to 299.23, 299.91, 299.95 or 299.97 or chs. 281, 283 or 289 to 292 or specified in any rule promulgated, order issued or ordinance adopted under any of those sections or chapters.

(6) COMPLIANCE WITH ENVIRONMENTAL IMPACT STATUTE. The department shall comply with the requirements under s. 1.11 in conducting the experiment authorized by this section. The department shall initiate compliance by preparing and reviewing, under the procedures it has established under s. 1.11, an environmental assessment for this experiment.

History: 1983 a. 421; 1985 a. 135 s. 85; 1989 a. 335; 1991 a. 39; 1995 a. 201, 227, 258; 1997 a. 35, 248; 2001 a. 16.

NOTE: 1983 Wis. Act 421, which created this section, has "legislative findings" in section 1.

30.205 Water resources development projects. The department may cooperate with and enter into agreements with the appropriate federal agencies for the purpose of constructing, maintaining and operating water resources development projects. Such agreements may contain any indemnification provisions required by federal law.

History: 1987 a. 27.

30.206 General permits. (1) PROCEDURE FOR ISSUING GENERAL PERMITS. (a) The department shall issue the statewide general permits as rules promulgated under ch. 227 required under ss. 30.12 (3) (a), 30.123 (7) (a), and 30.20 (1t) (a). The statewide general permits required under ss. 30.12 (3) (a), 30.123 (7) (a), and 30.20 (1t) (a) shall be promulgated within 540 days after February 6, 2004. The department shall submit in proposed form the rule containing the statewide general permit under s. 30.19 (3r) (a) and the rule under s. 30.19 (1d) to the legislative council staff under s. 227.15 (1) no later than August 1, 2004. General permits issued under s. 30.206, 2001 stats., shall remain valid until the date upon which the rules issuing these statewide general permits are promulgated under this paragraph.

(c) To ensure that the cumulative adverse environmental impact of the activities authorized by a general permit is insignificant and that the issuance of the general permit will not injure public rights or interests, cause environmental pollution, as defined in s. 299.01 (4), or result in material injury to the rights of any riparian owner, the department may impose any of the following conditions on the permit:

1. Construction and design requirements that are consistent with the purpose of the activity authorized under the permit.

2. Location requirements that ensure that the activity will not materially interfere with navigation or have an adverse impact on the riparian property rights of adjacent riparian owners.

3. Restrictions to protect areas of special natural resource interest.

(1g) GENERAL PERMIT FOR CERTAIN PIERS AND WHARVES. The department may issue a general permit under this section for the configuration of a pier or wharf under s. 30.12 (1j).

(1m) GENERAL PERMIT FOR CERTAIN UTILITY FACILITIES. The department shall issue a general permit under this section for the construction of projects for which the commission is considered to have issued a certificate under s. 196.491 (3b).

(3) PROCEDURES FOR CONDUCTING ACTIVITIES UNDER GENERAL PERMITS. (a) A person wishing to proceed with an activity that may be authorized by a general permit shall apply to the department, with written notification of the person's wish to proceed, not less than 30 days before commencing the activity authorized by a general permit. The notification shall provide information describing the activity in order to allow the department to determine whether the activity is authorized by the general permit and shall give the department consent to enter and inspect the site, subject to s. 30.291. The department may make a request for additional information one time during the 30−day period. If the department makes a request for additional information, the 30−day period is tolled from the date the person applying for authorization to proceed receives the request until the date on which the department receives the information.

(b) If within 30 days after a notification under par. (a) is submitted to the department the department does not require any additional information about the activity that is subject to the notification and does not inform the applicant that an individual permit will be required, the activity will be considered to be authorized by the general permit and the applicant may proceed without further notice, hearing, permit or approval if the activity is carried out in compliance with all of the conditions of the general permit.

(c) Upon completion of an activity that the department has authorized under a general permit, the applicant for the general permit shall provide to the department a statement certifying that the activity is in compliance with all of the conditions of the general permit and a photograph of the activity.

(3r) INDIVIDUAL PERMIT IN LIEU OF GENERAL PERMIT. (a) The department may decide to require a person who has applied under sub. (3) for authorization to proceed under a general permit to

Electronic reproduction of 2009−10 Wis. Stats. database, current through 2011 Wis. Act 39 and July 25, 2011.

apply for and be issued an individual permit or be granted a contract if either of the following applies:

1. The department determines that the proposed activity is not authorized under the general permit.

2. The department has conducted an investigation and visited the site and has determined that conditions specific to the site require restrictions on the activity in order to prevent significant adverse impacts to the public rights and interest, environmental pollution, as defined in s. 299.01 (4), or material injury to the riparian rights of any riparian owner.

(b) A decision by the department to require an individual permit under this subsection shall be in writing.

(5) FAILURE TO FOLLOW PROCEDURAL REQUIREMENTS. Failure of an applicant to follow the procedural requirements of this section may result in forfeiture but may not, by itself, result in abatement of the activity.

(6) REQUEST FOR INDIVIDUAL PERMIT. A person proposing an activity for which a general permit has been issued may request an individual permit under the applicable provisions of this subchapter or ch. 31 in lieu of seeking authorization under the general permit.

(7) INAPPLICABILITY. This section does not apply to an application for a general permit for the Wolf River and Fox River basin area or any area designated under s. 30.207 (1m).

History: 1987 a. 374; 1995 a. 227; 1997 a. 174; 2003 a. 89, 118, 326; 2007 a. 96, 204.

Cross−reference: See also ss. NR 320.06, 323.04, 328.05, 328.35, 341.08 and ch. NR 310, Wis. adm. code.

30.2065 General permit for certain wetland restoration activities. (1) DEFINITION. In this section, "activity" means a wetland restoration activity sponsored by a federal agency.

(2) ISSUANCE; VALIDITY. (a) Upon compliance with the requirements under subs. (3) and (4), the department may issue a general permit to a person wishing to proceed with an activity. A permit issued under this subsection is in lieu of any permit or approval that would otherwise be required for that activity under this chapter or s. 31.02, 31.12, 31.33, 281.15, or 281.36.

(b) A general permit issued under this subsection is valid for a period of 5 years except that an activity that the department determines is authorized by a general permit remains authorized under the permit until the activity is completed. The department may renew or modify a general permit issued under this subsection.

(c) To ensure that the cumulative adverse environmental impact of the activities authorized by a general permit is insignificant and that the issuance of the general permit will not injure public rights or interests, cause environmental pollution, as defined in s. 299.01 (4), or result in material injury to the rights of any riparian owner, the department may impose any of the following conditions on the permit:

1. Construction and design requirements that are consistent with the purpose of the activity authorized under the permit.

2. Location requirements that ensure that the activity will not materially interfere with navigation or have an adverse impact on the riparian property rights of adjacent riparian owners.

3. Restrictions to protect areas of special natural resource interest.

(3) PUBLIC NOTICE. (a) The department shall circulate to interested and potentially interested members of the public notices of its intention to issue a general permit. Procedures for the circulation of public notices shall include at least the following:

1. Publication of the notice as a class 1 notice under ch. 985.

2. Mailing of the notice to any person or group upon request.

(b) The department shall provide a period of not less than 30 days following the date of the public notice during which time interested persons may submit their written views on the department's intention to issue a general permit under sub. (2). All written comments submitted during the period for comment shall be retained by the department and considered in the issuance of the general permit.

(c) Every notice issued by the department of the department's intention to issue a general permit under sub. (2) shall include a description of the activities proposed to be authorized under the general permit.

(4) PUBLIC HEARING. (a) 1. The department shall provide an opportunity for any affected state, the U.S. environmental protection agency, or any interested state or federal agency or person or group of persons to request a public hearing with respect to the department's intention to issue a general permit under sub. (2). Such request for a public hearing shall be filed with the department within 30 days after the circulation of the public notice under sub. (3) and shall indicate the interest of the party filing the request and the reasons why a hearing is warranted.

2. The department shall hold a public hearing upon a request under subd. 1. if the department determines that there is a significant public interest in holding such a hearing. Hearings held under this section are not contested cases under s. 227.01 (3).

(b) Public notice of any hearing held under this section shall be circulated in accordance with the requirements of sub. (3).

(5) PROCEDURES FOR CONDUCTING ACTIVITIES. (a) A person wishing to proceed with an activity under the authority of a general permit issued under sub. (2) shall apply to the department, with written notification of the person's wish to proceed with the activity, not less than 15 days before commencing the activity. The federal agency sponsoring the activity may file the application on behalf of the person wishing to proceed with the activity, if the person authorizes the federal agency to do so. The notification shall provide information describing the activity in order to allow the department to determine whether the activity is authorized by the general permit and shall give the department consent to enter and inspect the site, subject to s. 30.291. The department may make a request for additional information one time during the 15−day period. If the department makes a request for additional information, the 15−day period is tolled from the date the request for additional information is received until the date on which the department receives the information.

(b) If within 15 days after a notification under par. (a) is submitted to the department the department does not require any additional information about the activity that is subject to the notification and does not inform the person wishing to proceed with the activity or the federal agency sponsoring the activity that an individual permit will be required, the activity will be considered to be authorized under the general permit and the activity may proceed without further notice, hearing, permit, or approval if the activity is carried out in compliance with all of the conditions of the general permit.

(6) INDIVIDUAL PERMIT IN LIEU OF GENERAL PERMIT. (a) The department may decide to require a person who has applied under sub. (5) for authority to proceed with an activity under a general permit to apply for and be issued an individual permit if any of the following applies:

1. The department determines that the proposed activity is not authorized under the general permit.

2. The department has conducted an investigation and visited the site and has determined that conditions specific to the site require restrictions on the activity in order to prevent significant adverse impacts to the public rights and interest, environmental pollution, as defined in s. 299.01 (4), or material injury to the riparian rights of any riparian owner.

(b) A decision by the department to require an individual permit under this subsection shall be in writing.

(7) COMPLETION OF ACTIVITIES. Upon completion of an activity that the department has authorized under a general permit, the federal agency that sponsored the activity shall provide to the department a statement certifying that the activity is in compliance with all of the conditions of the general permit and a photograph of the activity.

2009−10 Wis. Stats. database updated and current through 2011 Wis. Act 39 and July 25, 2011. Statutory changes effective on or prior to 9−1−11 are printed as if currently in effect. Statutory changes effective after 9−1−11 are designated by NOTES. See Are The Statutes on this Website Official?

Electronic reproduction of 2009−10 Wis. Stats. database, current through 2011 Wis. Act 39 and July 25, 2011.

(8) FAILURE TO FOLLOW PROCEDURAL REQUIREMENTS. Failure of the person authorized to proceed under the general permit, or the federal agency that sponsored the activity, to follow the procedural requirements of this section may result in forfeiture but may not, by itself, result in abatement of the activity.

(9) REQUEST FOR INDIVIDUAL PERMIT. A person wishing to proceed with an activity for which a general permit has been issued may request an individual permit under the applicable provisions of this chapter or ch. 31 in lieu of seeking authorization under the general permit.

History: 2009 a. 391.

30.207 General permit pilot program. (1) GEOGRAPHICAL AREA. For purposes of this section and s. 30.2023, the Wolf River and Fox River basin area consists of all of Winnebago County; the portion and shoreline of Lake Poygan in Waushara County; the area south of STH 21 and east of STH 49 in Waushara County; that portion of Calumet County in the Lake Winnebago watershed; all of Fond du Lac County north of STH 23; that portion of Outagamie County south and east of USH 41; that portion of Waupaca County that includes the town of Mukwa, city of New London, town of Caledonia, town of Fremont; and the portion and shoreline of Partridge Lake and the Wolf River in the town of Weyauwega.

(1m) OPTIONAL AREA. In addition to the Wolf River and Fox River basin area, the secretary may designate another area of the state in which general permits may be issued under this section. If the secretary designates an area under this subsection, the secretary shall do so within 6 months after the effective date of the first permit issued for the Wolf River and Fox River basin area.

(2) ACTIVITIES COVERED. Within the Wolf River and Fox River basin area or any area designated under sub. (1m), the department may issue a general permit under this section authorizing any activity that would require a permit or approval under this chapter if the department determines that it is appropriate to issue a general permit under sub. (6). The department may issue a general permit on its own initiative or based on an application submitted under sub. (3).

(3) APPLICATION FOR GENERAL PERMIT. (a) Any local entity, as defined in s. 30.77 (3) (dm), any group of 10 riparian owners who will be affected by the issuance of a general permit, or any contractor who is or has been involved in the construction of structures or along navigable waters may apply for a general permit under this section.

(b) Upon the request of a prospective applicant specified in par. (a), and before an application is submitted, the department shall meet with the prospective applicant, and other interested persons as determined by the prospective applicant or the department, to make a preliminary analysis of the likelihood that the department will issue the general permit.

(c) An application for a general permit under this section shall include all of the following:

1. The name, legal address and telephone number of each applicant.

2. A U.S. geological survey map or similar map that has a scale of not less than one inch per 2,000 feet and that shows the proposed permit area.

3. A general legal description to quarter−quarter section of the proposed permit area.

4. A diagram to scale showing the activity proposed for the general permit with contours and cross−section profiles that show a representative example of existing conditions and a representative example of any alteration to navigable waters or the adjacent lands that may result from the activity.

5. Topographic, bathymetric, soil or other maps, photographs or other data to demonstrate the characteristics of the proposed permit area if the maps, photographs or data are reasonably available.

6. The names and addresses of at least 5 persons who own real property adjacent to the navigable waters located in the proposed permit area. If fewer than 5 persons own real property adjacent to such waters, the application shall include the names and addresses of all of these persons.

(d) The department shall respond to the application in writing within 90 business days after receiving the application. In its response the department shall do either of the following:

1. Deny the application and specify the reason for the denial.

2. Specify the department's plans for proceeding on the application.

(4) ENVIRONMENTAL ANALYSIS; HEARING; CONSULTATION. After receiving an application that the department does not deny under sub. (3) (d) 1. and before determining whether to issue the general permit, the department shall do all of the following:

(a) Conduct an environmental analysis.

(c) Consult with any of the following as the department considers appropriate:

1. Any local entity, as defined in s. 30.77 (3) (dm), that has an interest in the quality or use of or that has jurisdiction over the navigable waters located in the proposed permit area.

2. Any contractor who is or has been involved in the construction of structures or improvements in or along navigable waters located in the proposed permit area.

3. Any riparian owners whose property rights may be affected by the issuance of the general permit.

4. Any other interested party, as determined by the department or the applicant.

(6) ISSUANCE OF GENERAL PERMITS. (a) The department shall issue a general permit under this section if the department determines that the cumulative adverse environmental impact of the activity in the proposed permit area is insignificant and that the issuance of the general permit will not injure public rights or interest, cause environmental pollution, as defined in s. 299.01 (4), or result in material injury to the rights of any riparian owners.

(b) The standards for the activity contained in a general permit issued under this section shall supersede any conflicting standards required under this chapter for the activity.

(7) ACTIVITIES UNDER GENERAL PERMITS. (a) At least 15 days before beginning the activity that is authorized by a general permit under this section the person who wishes to conduct the activity shall submit a notice to the department and shall pay the fee specified in s. 30.28 (2) (b) 2. The notice shall describe the activity, state the name of the person that will be conducting the activity and state the site where the activity will be conducted. The notice shall also contain a statement signed by the person conducting the activity that the person will act in conformance with the standards contained in the general permit.

(b) Upon receipt of a notice that complies with par. (a), the department may inform the person that the activity may not be conducted under the general permit if conditions at the site where the activity would be conducted would cause adverse environmental impact, injure public rights and interests or cause environmental pollution, as defined in s. 299.01 (4). The department shall respond to the person within 15 days after receiving the notice. Failure of the department to respond within 15 days shall constitute the department's approval of the activity under the general permit.

(c) A person conducting an activity that is authorized by a general permit under this section shall comply with any applicable local ordinances.

(8) OPTION TO REQUEST INDIVIDUAL PERMITS. A person proposing an activity for which a general permit has been issued under this section may apply for an individual permit under this chapter in lieu of seeking authorization under the general permit. A person proposing an activity for which a general permit has not been

2009−10 Wis. Stats. database updated and current through 2011 Wis. Act 39 and July 25, 2011. Statutory changes effective on or prior to 9−1−11 are printed as if currently in effect. Statutory changes effective after 9−1−11 are designated by NOTES. See Are The Statutes on this Website Official?

Electronic reproduction of 2009−10 Wis. Stats. database, current through 2011 Wis. Act 39 and July 25, 2011.

issued under this section may apply for an individual permit under this chapter.

(9) ACCESS TO PROPERTY. For inspection purposes, an employee or agent of the department shall have free access during reasonable hours to any site where an activity is proposed to be, is or has been authorized under a general permit issued under this section if the employee or agent shows to any person who is present at the site and who owns the site or is otherwise in control of the site either of the following:

(a) For an employee of the department, proper identification issued by the department.

(b) For an agent who is not an employee of the department, written documentation that the agent is authorized by the department to have access for inspection purposes.

(10) SUNSET. The department may not issue any further general permits under this section on or after the date on which 5 years have lapsed after the effective date of the first general permit issued under this section.

History: 1997 a. 174; 2001 a. 16, 103; 2003 a. 118; 2005 a. 253.

30.208 Applications for individual permits and contracts; department determinations. (1) APPLICATION REQUIRED. A person who seeks to obtain or modify an individual permit under this subchapter or to enter into a contract under s. 30.20 shall submit an application to the department. The application may contain a request for a public hearing on the application.

(2) PROCEDURE FOR COMPLETING APPLICATIONS. In issuing individual permits or entering contracts under this subchapter, the department shall initially determine whether a complete application for the permit or contract has been submitted and, no later than 30 days after the application is submitted, notify the applicant in writing about the initial determination of completeness. If the department determines that the application is incomplete, the notice shall state the reason for the determination and the specific items of information necessary to make the application complete. An applicant may supplement and resubmit an application that the department has determined to be incomplete. There is no limit on the number of times that an applicant may resubmit an application that the department has determined to be incomplete under this section. The department may not demand items of information that are not specified in the notice as a condition for determining whether the application is complete unless both the department and the applicant agree or unless the applicant makes material additions or alterations to the activity or project for which the application has been submitted. The rules promulgated under s. 299.05 apply only to applications for individual permits or contracts under this subchapter that the department has determined to be complete.

(3) NOTICE OF COMPLETE APPLICATION; REQUEST FOR PUBLIC HEARING; DECISION. (a) Upon determination by the department that an application submitted under sub. (1) is complete, the department shall provide notice of complete application to interested and potentially interested members of the public, as determined by the department. The department shall provide the notice within 15 days after the determination that the application is complete. If the applicant has requested a public hearing as part of the submitted application, a notice of public hearing shall be part of the notice of complete application.

(b) If the notice of complete application does not contain a notice of public hearing, any person may request a public hearing in writing or the department may decide to hold a public hearing without a request being submitted if the department determines that there is a significant public interest in holding a hearing.

(c) A request for a public hearing under par. (b) must be submitted to the department or the department's decision to hold a public hearing must occur within 30 days after the department completes providing the notice of complete application. The department shall provide notice of public hearing within 15 days after the request for public hearing is submitted or the department makes its determination.

(d) The department shall hold a public hearing within 30 days after the notice of hearing has been provided under par. (a) or (c).

(e) Within 30 days after the public hearing is held or, if no public hearing is held, within 30 days of the 30−day comment period under sub. (4) (a), the department shall render a decision, issuing, denying, or modifying the permit or approving the contract that is the subject of the application submitted under sub. (1).

(3m) NOTICE TO DOWNSTREAM COMMUNITIES. When the department receives an application for an individual permit under s. 30.12 for a structure through which water transferred from the Great Lakes basin would be returned to the source watershed through a stream tributary to one of the Great Lakes, the department shall provide notice of the application to the governing body of each city, village, and town through which the stream flows or that is adjacent to the stream downstream from the point at which the water would enter the stream.

(4) PUBLIC COMMENT. (a) The department shall provide a period for public comment after the department has provided a notice of complete application under sub. (3) (a), during which time any person may submit written comments with respect to the application for the permit or contract. The department shall retain all of the written comments submitted during this period and shall consider all of the comments in the formulation of the final decision on the application. The period for public comment shall end on the 30th day following the date on which the department completes providing the notice of complete application, except as provided in par. (b).

(b) If a public hearing is held, the period for public comment shall end on the 10th day following the date on which the public hearing is completed.

(d) The department shall promulgate rules to establish procedures for the conduct of public hearings held under this subsection. Notwithstanding s. 227.42, a public hearing held under this subsection shall be an informational hearing and may not be treated as, nor converted to, a contested case under s. 227.01 (3).

(5) NOTICE REQUIREMENTS. (a) The department shall, by rule, establish procedures for providing notices of complete applications and notices of public hearings to be provided under sub. (3), and notices of administrative hearings to be provided under s. 30.209 (1m). The procedures shall require all of the following:

1. That the notice be published as a class 1 notice under ch. 985.

2. That the notice be mailed to any person or group upon request.

(b) The department shall, by rule, prescribe the form and content of notices of complete applications and notices of public hearings to be provided under sub. (3), and notices of administrative hearings to be provided under s. 30.209 (1m). Each notice shall include all of the following information:

1. The name and address of each applicant or permit holder.

2. A brief description of each applicant's activity or project that requires the permit.

3. The name of the waterway in or for which the activity or project is planned.

4. For a notice of complete application and a notice of public hearing under sub. (3), a statement of the tentative determination to issue, modify, or deny a permit for the activity or project described in the application.

5. For a notice of complete application and a notice of public hearing under sub. (3), a brief description of the procedures for the formulation of final determinations, including a description of the comment period required under sub. (4).

(c) The department may delegate the department's requirement to provide notice under sub. (3) or s. 30.209 (1m) by doing any of the following:

1. Requiring that the applicant for the permit or contract provide by publication, mailing, or other distribution one or more of the notices.

Electronic reproduction of 2009−10 Wis. Stats. database, current through 2011 Wis. Act 39 and July 25, 2011.

2. That the applicant for the permit or contract pay for the publication, mailing, or any other distribution costs of providing one or more of the notices.

History: 2003 a. 118 ss. 6, 149; 2007 a. 227.

30.209 Contracts and individual permits; administrative and judicial review. (1) DEFINITION. In this section, "applicant" means any person applying to receive a permit or contract under this subchapter or any person who has received a permit or contract under this subchapter.

(1m) REQUEST FOR ADMINISTRATIVE REVIEW. (a) Any interested person may file a petition with the department for administrative review within 30 days after any of the following decisions given by the department:

1. The issuance, denial, or modification of any individual permit issued or contract entered into under this subchapter.

2. The imposition of, or failure to impose, a term or condition on any individual permit issued or contract entered into under this subchapter.

(b) If the petitioner is not the applicant, the petition shall describe the petitioner's objection to the permit or contract and shall contain all of the following:

1. A description of the objection that is sufficiently specific to allow the department to determine which provisions of this subchapter may be violated if the proposed activity or project under the permit or contract is allowed to proceed.

2. A description of the facts supporting the petition that is sufficiently specific to determine how the petitioner believes the activity or project, as proposed, may result in a violation of the provisions of this subchapter.

3. A commitment by the petitioner to appear at the administrative hearing and present information supporting the petitioner's objection.

(c) The activity or project shall be stayed pending an administrative hearing under this section, if the petition contains a request for the stay showing that a stay is necessary to prevent significant adverse impacts or irreversible harm to the environment.

(d) If a stay is requested under par. (c), the stay shall be in effect until either the department denies the request for an administrative hearing or the hearing examiner determines that the stay is not necessary.

(e) The petitioner shall file a copy of the petition with the department. If the petitioner is not the applicant, the petitioner shall simultaneously provide a copy of the petition to the applicant. The applicant may file a response to the petition with the department. If the applicant files a response under this paragraph, it shall be filed within 15 days after the petition is filed.

(f) The department shall grant or deny the petition within 30 days after the petition is filed. The failure of the department to dispose of the petition within this 30−day period is a denial. The department shall deny the petition if any of the following applies:

1. The petitioner is not the applicant and the petition does not comply with the requirements of par. (b).

2. The objection contained in the petition is not substantive. The department shall determine that an objection is substantive if the supporting facts contained in the objection appear to be substantially true and raise reasonable grounds to believe that the provisions of this subchapter may be violated if the activity or project is undertaken.

(fm) If the department denies the petition, the department shall send the petitioner the denial in writing, stating the reasons for the denial.

(g) If the department grants a petition under this subsection, the department shall refer the matter to the division of hearings and appeals in the department of administration within 15 days after granting the petition unless the petitioner and the applicant agree to an extension.

(2) ADMINISTRATIVE HEARINGS. (a) An administrative hearing under this subsection shall be treated as a contested case under ch. 227.

(b) If a stay under sub. (1m) (c) is in effect, the hearing examiner shall, within 30 days after receipt of the referral under sub. (1m) (g), determine whether continuation of the stay is necessary to prevent significant adverse impacts or irreversible harm to the environment pending completion of the hearing. The hearing examiner shall make the determination based on the request under sub. (1m) (c), any response from the applicant under sub. (1m) (e), and any testimony at a public hearing or any public comments. The determination shall be made without a hearing.

(c) A hearing under this section shall be completed within 90 days after receipt of the referral of the petition under sub. (1m) (g), unless all parties agree to an extension of that period. In addition, a hearing examiner may grant a one−time extension for the completion of the hearing of up to 60 days on the motion of any party and a showing of good cause demonstrating extraordinary circumstances justifying an extension.

(d) Notwithstanding s. 227.44 (1), the department shall provide a notice of the hearing at least 30 days before the date of the hearing to all of the following:

1. The applicant.

2. Each petitioner, if other than the applicant.

3. Any other persons required to receive notice under the rules promulgated under s. 30.208 (5).

(3) JUDICIAL REVIEW. (a) Any person whose substantial interest is affected by a decision of the department under sub. (1m) (a) 1. or 2. may commence an action in circuit court to review that decision.

(b) Any party aggrieved by a decision of a hearing examiner under sub. (2) may commence an action in circuit court to review that decision.

History: 2003 a. 118, 326, 327.

30.2095 Limits and conditions for permits and contracts. (1) (a) Except as provided in par. (b), every permit or contract issued under ss. 30.01 to 30.29 for which a time limit is not provided by s. 30.20 (2) is void unless the activity or project is completed within 3 years after the permit or contract was issued.

(b) The department may specify a time limit of less than 3 years for a permit or contract issued under ss. 30.01 to 30.29. For good cause, the department may extend the time limit for a permit or contract issued under ss. 30.01 to 30.29 for no longer than 2 years if the grantee requests an extension prior to expiration of the initial time limit.

(2) For good cause, the department may modify or rescind any permit or contract issued under ss. 30.01 to 30.29 before its expiration.

History: 1987 a. 374; 2003 a. 118 s. 15; Stats. 2003 s. 30.2095.

30.21 Use of beds of Great Lakes by public utilities. (1) WATER INTAKE FACILITIES. Upon compliance with such applicable regulations as may be imposed by the government of the United States and subject to chs. 196 and 197 and rules and orders of the public service commission issued pursuant thereto, any public utility may, pursuant to permit granted by resolution of the governing body of any city, village or town situated on any waters of Lake Michigan or Lake Superior or in the Great Lakes basin, construct, maintain and operate, upon and under the bed thereof adjoining such city, village or town, all cribs, intakes, basins, pipes and tunnels necessary or convenient for securing an adequate supply of water suitable for the purposes of such utility, provided only, that concurrently with the construction of facilities for the withdrawal of water from the lakes, the city, town or village must construct sewage treatment and disposal works adequate to treat completely all sewage of the municipality. Any city, village or town, the limits of which are within 50 miles of any such waters and any public utility serving the same shall be deemed to be situ-

Electronic reproduction of 2009−10 Wis. Stats. database, current through 2011 Wis. Act 39 and July 25, 2011.

ated on such waters within the meaning of this section and such municipality or public utility serving the same shall, subject to this section, have authority to acquire and own or lease sufficient real estate, not to exceed 50 miles beyond the corporate limits of such municipality, for the purpose of constructing, maintaining and operating thereon or thereunder, transmission facilities and structures, including cribs, intakes, basins, pipes and tunnels, necessary or convenient for securing an adequate supply of water suitable for the purposes of such municipality or utility. Such facilities shall be so constructed, maintained and operated as to avoid material obstruction to existing navigation or the use of private property not owned by such utility.

(2) HARBOR FACILITIES; PUBLIC UTILITY STRUCTURES. Pursuant to the authority and conditions specified in sub. (1), any such utility may also:

(a) Improve the navigability of any of the waters specified in sub. (1) and construct upon the shore and the adjoining bed of such waters, harbor facilities adapted for the reception, docking, unloading and loading of vessels carrying supplies required for the operation of such utility.

(b) Place any public utility structure, including all or part of any plant for the generation of electricity and the appurtenances, upon the bed of any of the waters specified in sub. (1), provided the utility first obtains approval under this chapter and obtains the approval of the public service commission as required by s. 196.49 or rules or orders of the public service commission issued pursuant thereto, and also obtains the approval of the department to the making of any payment to be made to the municipality with respect to the erection of such structure.

(3) COMPLIANCE WITH OTHER PERMIT REQUIREMENTS. (a) Each public utility operating under a permit under this section on January 1, 1986, shall comply with s. 281.35 (2), if applicable.

(b) On and after January 1, 1986, no city, village or town may issue a permit under sub. (1) unless the public utility applying for the permit complies with s. 30.18 (2) (b), if applicable.

History: 1985 a. 60; 1995 a. 227.

30.24 Bluff protection. (1) DEFINITIONS. In this section:

(a) "Obligate" has the meaning given in s. 23.0917 (1) (e).

(b) "Protect" includes to restore.

(2) AUTHORIZATION. For the purposes of protecting bluff land, the department may expend money from the appropriation under s. 20.866 (2) (ta) for a program under which the department may do all of the following:

(a) Acquire bluff land or interests in bluff land along the Great Lakes.

(b) Award grants to nonprofit conservation organizations to acquire these lands or interests under s. 23.096.

(3) BAN ON LOCATION RESTRICTIONS. In exercising its authority under sub. (2) (a), the department may not limit acquisitions of bluff lands to bluff lands that are within the boundaries of projects established by the department.

(4) LIMIT ON GRANTS. Except as provided in s. 23.096 (2m), a grant awarded under this section or under s. 23.096 to protect bluffs may not exceed 50% of the acquisition costs.

(5) RULES. The department shall promulgate rules to administer and implement this section, including standards for awarding grants to protect bluffs under this section and under s. 23.096 grants. The department by rule shall define "bluff land" for purposes of this section.

History: 1999 a. 9; 2007 a. 20.

30.25 Wolf River protection. (1) Except as provided under sub. (2), no person may make any effort to improve the navigation on the Wolf River north of the southern boundary of Shawano County nor shall any dam be authorized for construction in that portion of the Wolf River. Any permit issued or in effect by virtue of or under authority of any order or law authorizing the construction of any dam in the Wolf River in Langlade County is void. This declaration does not affect permits for or the operation or maintenance of any dam in existence on August 24, 1963.

(2) A person may engage in a minor dredging project to improve access to or to improve the aesthetics of the Wolf River in Shawano County if a permit issued by the department under s. 30.20 authorizes the project.

History: 1987 a. 374.

30.255 Florence Wild Rivers Interpretive Center. Beginning with fiscal year 2007−08, the department shall provide a grant in the amount of $27,000 in each fiscal year to the Florence Wild Rivers Interpretive Center to be used for park and recreation uses, forestry education, and tourist information provided by the center and for its operational costs.

History: 2007 a. 20.

30.26 Wild rivers. (1) LEGISLATIVE INTENT. In order to afford the people of this state an opportunity to enjoy natural streams, to attract out−of−state visitors and assure the well−being of our tourist industry, it is in the interest of this state to preserve some rivers in a free flowing condition and to protect them from development; and for this purpose a system of wild rivers is established, but no river shall be designated as wild without legislative act.

(2) DESIGNATION. (a) The following rivers, or portions of rivers, are designated as wild rivers:

1. The Pike River in Marinette County.

2. The Pine River and its tributary Popple River in Florence and Forest counties.

3. The portion of the Brunsweiler River, described as follows: from the point at which the Brunsweiler River leaves the SW−1/4 of the SW−1/4 of Sec. 22, T. 44 N., R. 4 W. downstream to the point at which the Brunsweiler River crosses the boundary of the Chequamegon−Nicolet National Forest in the NW−1/4 of Sec. 22, T. 45 N., R. 4 W. This portion of the Brunsweiler River shall be known as the "Martin Hanson Wild River".

3m. Portions of the Totogatic River as follows:

a. From the outlet of Totogatic Lake located in Bayfield County to the upstream end of Nelson Lake at the Southern edge of the walleye spawning refuge located in Sawyer County.

b. From a point 500 feet below the dam in the Totogatic Wildlife Area located in Washburn County to the upstream end of the Colton Flowage located in Washburn County.

c. From a point 500 feet below the dam that forms the Colton Flowage located in Washburn County to the point where the river crosses the Washburn−Douglas County line immediately above the upstream end of the Minong Flowage.

d. From the bridge on CTH "I" that crosses the river located in Washburn County to the confluence of the river with the Namekagon River located in Burnett County.

(b) The rivers designated under par. (a) shall receive special management to assure their preservation, protection and enhancement of their natural beauty, and their unique recreational and other inherent values in accordance with guidelines outlined in this section.

(3) DUTIES OF DEPARTMENT. The department in connection with wild rivers shall:

(a) Provide active leadership in the development of a practical management policy.

(b) Consult other state agencies and planning committees.

(c) Collaborate with county and town boards and local development committees or boards in producing a mutually acceptable program for the preservation, protection and enhancement of the rivers.

(d) Administer the management program.

(e) Seek the cooperation of the U.S. forest service, timber companies, county foresters and private landowners in implementing land use practices to accomplish the objectives of the management policy.

(f) Act as coordinator under this subsection.

2009−10 Wis. Stats. database updated and current through 2011 Wis. Act 39 and July 25, 2011. Statutory changes effective on or prior to 9−1−11 are printed as if currently in effect. Statutory changes effective after 9−1−11 are designated by NOTES. See Are The Statutes on this Website Official?

Electronic reproduction of 2009−10 Wis. Stats. database, current through 2011 Wis. Act 39 and July 25, 2011.

(4) SNOWMOBILES AND ALL−TERRAIN VEHICLES. (a) The department may not prohibit the crossing of a bridge over a wild river by an all−terrain vehicle traveling on an all−terrain vehicle trail, as defined under s. 23.33 (1) (d), or by a snowmobile traveling on a snowmobile trail, as defined under s. 350.01 (17) that is constructed in any of the following locations:

1. Along the Nicolet State Trail where the trail crosses the existing railroad trestle over the Pine River and the Popple River.

3. In Florence County along County Highway N where the trail would cross the Pine River.

(b) The state shall permit all−terrain vehicles and snowmobiles to travel in a corridor across any state land that separates an all−terrain vehicle trail or a snowmobile trail and the bridges constructed at the locations listed under par. (a).

(5) BRUNSWEILER RIVER. (a) As part of the management of the designated portion of the Brunsweiler River, all of the following shall apply:

1. The U.S. forest service may maintain the dam that impounds Beaver Dam Lake that is in place on April 29, 2009. If the U.S. forest service receives authorization from the department to abandon the dam, the department may carry out restoration activities to restore the natural appearance of the lake and the river.

2. The U.S. forest service may maintain or replace the boat landing on Mineral Lake that is in place on April 29, 2009.

3. Any pier that is in place on the river on April 29, 2009, may be maintained or replaced. A replacement pier may have no more boat slips than did the original pier. A replacement pier shall either be limited to the dimensions of the original pier or the dimension requirements specified in s. 30.12 (1g) (f), whichever dimensions result in a smaller square area for the pier and any accompanying platform.

(b) Compliance with any applicable permitting or other requirements under chs. 30 and 31 is required for the maintenance and replacement activities authorized under this subsection.

(5m) TOTOGATIC RIVER. (a) As part of the management of the designated portions of the Totogatic River, all of the following shall apply:

1. The department may authorize the removal of natural obstructions from the portion of the river specified in sub. (2) (a) 3m. a. if needed for the protection or growth of wild rice.

2. Any pier that is in place on the river on July 25, 2009, may be maintained or replaced. A replacement pier may have no more boat slips than did the original pier and may not have a loading platform. A replacement pier shall either be limited to the dimensions of the original pier or the dimension requirements specified for piers in s. 30.12 (1g) (f), whichever dimensions result in a smaller square area for the pier.

3. Any bridge or water crossing that is used for recreational or forestry purposes and that is in place on the river on July 25, 2009, may be maintained, modified, or replaced to the extent necessary to ensure public safety. Any such maintenance, modification, or replacement shall be performed in a manner that results in the least impact on the beauty and the natural condition of the river.

(b) Compliance with any applicable permitting or other requirements under ch. 30 is required for the maintenance, modification, and replacement activities authorized under this subsection.

History: 2003 a. 248; 2009 a. 7, 32, 276.

Cross−reference: See also ch. NR 302 and ss. NR 102.10 and 103.04, Wis. adm. code.

30.265 Adopt a river program. The department shall establish an adopt a river program to encourage program volunteers to clean up a specified portion of a lake, river, wetland, or ravine. The department shall supply to the volunteers educational support and necessary supplies. The department shall keep records of information related to the program, including the pounds of rubbish collected, the number of volunteer hours provided, and descriptions of the debris found. The department shall publicly recognize volunteers who participate in the program.

History: 2001 a. 16, 104.

30.27 Lower St. Croix River preservation. (1) PURPOSE. The Lower St. Croix River, between the dam near St. Croix Falls and its confluence with the Mississippi River, constitutes a relatively undeveloped scenic and recreational asset. The preservation of this unique scenic and recreational asset is in the public interest and will benefit the health and welfare of the citizens of Wisconsin. The state of Wisconsin is therefore determined that the Lower St. Croix River be included in the national wild and scenic rivers system under the wild and scenic rivers act, as amended, 16 USC 1271 to 1287, and the Lower St. Croix River act of 1972, 16 USC 1274 (a) (9). The purpose of this section is to ensure the continued eligibility of the Lower St. Croix River for inclusion in the national wild and scenic rivers system and to guarantee the protection of the wild, scenic and recreational qualities of the river for present and future generations.

(2) ZONING GUIDELINES. (a) As soon as possible after May 7, 1974, the department shall adopt, by rule, guidelines and specific standards for local zoning ordinances which apply to the banks, bluffs and bluff tops of the Lower St. Croix River. The guidelines shall designate the boundaries of the areas to which they apply. In drafting the guidelines and standards, the department shall consult with appropriate officials of counties, cities, villages and towns lying within the affected area. The standards specified in the guidelines shall include, but not be limited to, the following:

1. Prohibition of new residential, commercial and industrial uses, and the issuance of building permits therefor, where such uses are inconsistent with the purposes of this section.

2. Establishment of acreage, frontage and setback requirements where compliance with such requirements will result in residential, commercial or industrial uses which are consistent with the purposes of this section.

(b) The standards established under par. (a) shall be consistent with but may be more restrictive than any pertinent guidelines and standards promulgated by the secretary of the interior under the wild and scenic rivers act. If it appears to the department that the purposes of this section may be thwarted or the wild, scenic or recreational values of the river adversely affected prior to the implementation of rules under this section, the department may exercise its emergency rule−making authority under s. 227.24, and such rules shall be effective and implemented and enforced under sub. (3) until permanent rules are implemented under sub. (3).

(c) The guidelines and standards established under par. (a) for nonconforming structures that are subject to a city, village or town zoning ordinance adopted under sub. (3) shall be the same as the guidelines and standards for nonconforming structures that are subject to a county zoning ordinance adopted under sub. (3). The guidelines and standards established under par. (a) shall allow a county, city, village or town zoning ordinance adopted under sub. (3) to differentiate between nonconforming structures and nonconforming uses.

(3) IMPLEMENTATION. Counties, cities, villages and towns lying, in whole or in part, within the areas affected by the guidelines adopted under sub. (2) are empowered to and shall adopt zoning ordinances complying with the guidelines and standards adopted under sub. (2) within 30 days after their effective date. If any county, city, village or town does not adopt an ordinance within the time limit prescribed, or if the department determines that an adopted ordinance does not satisfy the requirements of the guidelines and standards, the department shall immediately adopt such an ordinance. An ordinance adopted by the department shall be of the same effect as if adopted by the county, city, village or town, and the local authorities shall administer and enforce the ordinance in the same manner as if the county, city, village or town had adopted it. No zoning ordinance so adopted may be modified nor may any variance therefrom be granted by the county, city, vil-

Electronic reproduction of 2009−10 Wis. Stats. database, current through 2011 Wis. Act 39 and July 25, 2011.

lage or town without the written consent of the department, except nothing in this section shall be construed to prohibit a county, city, village or town from adopting an ordinance more restrictive than that adopted by the department.

History: 1973 c. 197; 1983 a. 192; 1985 a. 182 s. 57; 1995 a. 225; 1999 a. 153.

Cross−reference: See also ch. NR 118, Wis. adm. code.

The federal Wild and Scenic Rivers Act did not preempt state and local governmental regulation of the Lower St. Croix River. The state has authority to exercise its police power in the federal zone, and this section remains in full force and effect. State v. St. Croix County, 2003 WI App 173, 266 Wis. 2d 498, 668 N.W.2d 743, 02−1645.

30.275 Scenic urban waterways. (1) LEGISLATIVE INTENT. In order to afford the people of this state an opportunity to enjoy water−based recreational activities in close proximity to urban areas, to attract out−of−state visitors and to improve the status of the state's tourist industry, it is the intent of the legislature to improve some rivers and their watersheds. For this purpose a system of scenic urban waterways is established, but no river shall be designated as a scenic urban waterway without legislative act.

(2) DESIGNATION. The following waters are designated scenic urban waterways and shall receive special management as provided under this section:

(a) The Illinois Fox River and its watershed and the Fox River, extending from Lake Winnebago to Green Bay, and its watershed.

(b) The Rock River consisting of all of the following:

1. The river from the point that the river flows into the city of Watertown to the point that it flows out of the city of Watertown.

2. The river from the point it flows into the city of Jefferson to the point it flows out of the city of Fort Atkinson.

3. The river from the point it flows into the city of Janesville to the Illinois border.

(3) DUTIES OF DEPARTMENT. The department in connection with scenic urban waterways shall:

(a) Provide active leadership in the development of a practical management policy.

(b) Consult with other state agencies and planning committees and organizations.

(c) Collaborate with municipal governing bodies and their development committees or boards in producing a mutually acceptable program for the preservation, protection and enhancement of the rivers and watersheds.

(d) Administer the management program.

(e) Seek the cooperation of municipal officials and private landowners in implementing land use practices to accomplish the objectives of the management policy.

(f) Act as coordinator under this section.

(g) Develop the Wisconsin Fox River scenic urban waterway, as designated in sub. (2), as a historic and recreational site.

(4) DEPARTMENT AUTHORITY. The department in connection with scenic urban waterways may:

(a) Acquire and develop land for parks, open spaces, scenic easements, public access, automobile parking, fish and wildlife habitat, woodlands, wetlands and trails.

(b) Lay out and develop scenic drives.

(c) Undertake projects to improve surface water quality and surface water flow.

(d) Provide grants to municipalities, lake sanitary districts, as defined in s. 30.50 (4q), and public inland lake protection and rehabilitation districts to undertake any of the activities under pars. (a) to (c).

History: 1983 a. 410; 1985 a. 29; 1987 a. 399; 1989 a. 31, 336, 352, 359; 1995 a. 349; 2003 a. 33.

Cross−reference: See also ch. NR 50, Wis. adm. code.

30.277 Urban rivers grant program. (1b) DEFINITION. In this section:

(a) "Governmental unit" means a city, village, town, county or the Kickapoo reserve management board.

(b) "Nature−based outdoor recreation" has the meaning given by the department by rule under s. 23.0917 (4) (f).

(1m) FUNDING. Beginning in fiscal year 1992−93, from the appropriation under s. 20.866 (2) (tz), the department shall award grants to governmental units to assist them in projects on or adjacent to rivers that flow through urban areas. The department may award these grants from the appropriation under s. 20.866 (2) (ta) beginning on July 1, 2000.

(2) PURPOSES OF GRANTS. (a) Grants awarded under this section from the appropriation under s. 20.866 (2) (tz) shall be used for projects that emphasize the preservation or restoration of urban rivers or riverfronts for the purposes of economic revitalization and encouraging outdoor recreation activities that involve the enjoyment of the state's natural resources. These outdoor recreation activities include, but are not limited to fishing, wildlife observation, enjoyment of scenic beauty, canoeing, boating, hiking and bicycling.

(b) A grant awarded to a governmental unit under this section may be used to acquire land and may be used for a shoreline enhancement project. For purposes of this paragraph, "land" includes rights in land.

(c) Grants awarded under this section from the appropriation under s. 20.866 (2) (ta) shall only be used for nature−based outdoor recreation.

(3) CRITERIA FOR GRANTS. The department shall consider all of the following criteria in awarding grants for projects under this section:

(a) The extent to which diverse outdoor recreational opportunities will be made available to all segments of the population.

(b) The extent of preservation or restoration, under the project, of an urban riverfront.

(c) The aesthetic value of the project.

(d) The project's potential for increasing tourism.

(e) Whether significant planning has occurred in the area subject to the jurisdiction of the governmental unit prior to its request for a grant under this section.

(f) The level of support for the project demonstrated by the governmental unit, including financial support.

(g) Whether the project involves a joint effort by 2 or more governmental units.

(h) The potential benefits of the project to the overall economy of the area subject to the jurisdiction of the governmental unit.

(i) The extent to which the project preserves or highlights an area with significant historical or cultural value.

(j) The extent to which access by the public to the riverfront will be improved.

(k) Whether the project is related to brownfields redevelopment, as defined in s. 23.09 (19) (a) 1.

(4) CAP ON GRANTS. No governmental unit may receive in any fiscal year more than 20% of the funds that are available for grants under this section.

(4m) GRANTS FOR KICKAPOO. The department may not award a grant under this section from the appropriation under s. 20.866 (2) (tz) to the Kickapoo reserve management board.

(5) MATCHING CONTRIBUTIONS. Except as provided in s. 23.096 (2m), to be eligible for a grant under this section, at least 50% of the acquisition costs for land or of the project costs shall be funded by private, local or federal funding, by in−kind contributions or by state funding. For purposes of this subsection, state funding may not include grants under this section, moneys appropriated to the department under s. 20.370 or money appropriated under s. 20.866 (2) (ta), (tp) to (tw), (ty) or (tz).

(6) RULES. The department shall promulgate rules for the administration of this section, including rules that specify the weight to be assigned to each criterion under sub. (3) and the minimum number of criteria under sub. (3) in which an applicant must perform satisfactorily in order to be awarded a grant. In specify-

Electronic reproduction of 2009−10 Wis. Stats. database, current through 2011 Wis. Act 39 and July 25, 2011.

ing the weight to be assigned to the criteria under sub. (3), the department shall assign the greatest weight to the criterion under sub. (3) (k). The department shall promulgate a rule specifying the types of projects that qualify as a shoreline enhancement project under this section.

History: 1991 a. 269; 1993 a. 16, 343; 1997 a. 27; 1999 a. 9; 2001 a. 38, 105; 2003 a. 33; 2007 a. 20.

Cross−reference: See also ch. NR 50, Wis. adm. code.

30.28 Fees for permits, approvals, determinations and hearings. (1) FEES REQUIRED. The department shall charge a permit or approval fee for carrying out its duties and responsibilities under ss. 30.10 to 30.205, 30.207 and 30.21 to 30.27. The permit or approval fee shall accompany the permit application, notice or request for approval.

(2) AMOUNT OF FEES. (a) For fees charged for permits and approvals under ss. 30.10 to 30.205 and 30.21 to 30.27, the department shall classify the types of permits and approvals based on the estimated time spent by the department in reviewing, investigating and making determinations whether to grant the permits or approvals. The department shall then set the fees as follows:

1. For a permit or approval with an estimated time of less than 3 hours, the fee shall be $30.

2. For a permit or approval with an estimated time of more than 3 hours but less than 9 hours, the fee shall be $100.

3. For a permit or approval with an estimated time of more than 9 hours, the fee shall be $300.

(b) 1. For an application for a general permit submitted under s. 30.207 (3), the fee shall be $2,000.

2. For a notice submitted under s. 30.207 (7), the fee shall be $100.

(2m) ADJUSTMENTS IN FEES. (a) The department shall refund a permit or approval fee if the applicant requests a refund before the department determines that the application for the permit or approval is complete. Except as provided in par. (am), the department may not refund a permit or approval fee after the department determines that the application is complete.

(am) The department shall refund 50% of the fee specified in sub. (2) (b) 1. if the department denies an application for a general permit under s. 30.207 (3) (d) 1. or does not issue a general permit under s. 30.207 (6).

(b) If the applicant applies for a permit, requests an approval, or submits a notice under s. 30.207 (7) after the project is begun or after it is completed, the department shall charge an amount equal to twice the amount of the fee that it would have charged under this section.

(c) If more than one fee under sub. (2) (a) or s. 31.39 (2) (a) or 281.22 is applicable to a project, the department shall charge only the highest fee of those that are applicable.

(d) The department, by rule, may increase any fee specified in sub. (2) (a). The department, by rule, may increase a fee specified in sub. (2) (b) only if the increase is necessary to meet the costs incurred by the department in acting on general permits or on notices submitted under s. 30.207.

(2r) FEE FOR EXPEDITED SERVICE. (a) The department, by rule, may charge a supplemental fee for a permit or approval that is in addition to the fee charged under this section if all of the following apply:

1. The applicant requests in writing that the permit or approval be issued within a time period that is shorter than the time limit under the rule promulgated under par. (b) for that type of permit or approval.

2. The department verifies that it will be able to comply with the request.

(b) If the department promulgates a rule under par. (a), the rule shall contain a time limit for each type of permit or approval classified under sub. (2) (a) for determining whether the department will grant the permit or approval.

(3) EXEMPTIONS. This section does not apply to projects funded in whole or in part by any federal agency or state agency.

History: 1977 c. 29; 1979 c. 221; 1981 c. 226, 346; 1987 a. 374; 1995 a. 27, 227; 1997 a. 27, 174; 2003 a. 118.

Cross−reference: See also ch. NR 300, Wis. adm. code.

The DNR has subject matter jurisdiction to issue after−the−fact permits, as well as those issued prior to the commencement of construction. Capoun Revocable Trust v. Ansari, 2000 WI App 83, 234 Wis. 2d 335, 610 N.W.2d 129, 99−1146.

30.285 Records of exemptions and permitted activities. (1) On an annual basis, the department shall keep records of all of the following:

(a) The number of exempted activities that are conducted under ss. 30.12 (1g) and (1k), 30.123 (6), 30.19 (1m), and 30.20 (1g) of which the department is aware.

(b) The number of exemptions under par. (a) for which the department required applications for individual permits or contracts.

(c) The number of exemptions under par. (a) for which the department required applications to seek authorizations to proceed under general permits.

(d) The number of activities that are authorized under general permits for which the department requires applications for individual permits or contracts.

(e) The number of piers and wharves for which the department issued a permit authorizing the configuration of the pier or wharf under s. 30.12 (1j) (c).

(2) For each record kept under sub. (1) (b) to (e), the department shall include all of the following:

(a) The type of permit or contract application required.

(b) The date of the application.

(c) The date of the department's decision whether to issue the individual permit, grant authorization under the general permit, or to grant the contract.

(d) The county in which the activity or project is located.

History: 2003 a. 118; 2005 a. 253; 2007 a. 204.

30.29 Operation of motor vehicles in waters prohibited. (1) DEFINITIONS. In this section:

(a) "Control" has the meaning given in s. 23.22 (1) (a).

(b) "Motor vehicle" includes an all−terrain vehicle, as defined in s. 340.01 (2g).

(c) "Outlying waters" has the meaning given in s. 29.001 (63).

(2) PROHIBITION. Except as provided under sub. (3), no person may operate a motor vehicle in or on any navigable water or the exposed bed of a navigable water.

(3) EXEMPTIONS. This section does not apply to:

(a) *Stream crossing.* A person operating a motor vehicle to cross a stream by use of a bridge, culvert, ford or similar structure if the crossing is in the most direct manner practical, if the crossing is from a highway or private road or from an established trail and if the person operates the motor vehicle at the minimum speed required to maintain controlled forward motion of the motor vehicle.

(b) *Agriculture activities.* A person operating a motor vehicle while the person is engaged in agricultural use, as defined under s. 91.01 (2).

(c) *Department activities.* The department or any agent of the department operating a motor vehicle while the person is engaged in activities authorized by the department.

(d) *Activities for which a permit is issued.* A person or agent of a person who is engaged in activities as authorized under a general or individual permit issued under this subchapter or as authorized under a contract entered into under this subchapter.

(e) *Amphibious vehicles.* A person operating an amphibious motor vehicle registered as a boat with the department if the amphibious vehicle enters the water at a boat launch or a ford.

(f) *Boat launching.* A person operating a motor vehicle to launch or load a boat, canoe or other watercraft.

Electronic reproduction of 2009−10 Wis. Stats. database, current through 2011 Wis. Act 39 and July 25, 2011.

(g) *On frozen waters.* A person operating a motor vehicle on the surface of any navigable waters which are frozen.

(h) *Access to frozen waters.* A person operating a motor vehicle to cross the bed or banks of a navigable water in order to reach the surface of any navigable waters which are frozen if the crossing is in the most direct manner practical, if the crossing is from a highway or private road or from an established trail and if the person operates the motor vehicle at the minimum speed required to maintain controlled forward motion of the motor vehicle.

(i) *Controlling Phragmites.* A person operating a motor vehicle in compliance with sub. (3m).

(3m) CONTROLLING PHRAGMITES IN OUTLYING WATERS. *Requirements for exemption.* A person may operate a motor vehicle in outlying waters if the operation meets all of the following requirements:

(a) The operation of the motor vehicle is for the purpose of mowing or applying a herbicide for the purpose of controlling Phragmites australis.

(b) The operation of the motor vehicle occurs only on the exposed bed of the outlying water.

(c) The operation of the motor vehicle occurs between the period beginning on July 1 of a given year and ending on March 15 of the following year.

(d) The mowing or application of the herbicide interferes with or destroys native species only to the degree that is necessary to control the invasive species Phragmites australis.

NOTE: Sub. (3m) was created as sub. (3m) (a) by 2009 Wis. Act 377 and renumbered to sub. (3m) by the legislative reference bureau under s. 13.92 (1) (bm) 2.

(4) PENALTY. A person who violates this section shall forfeit $50 for the first offense and shall forfeit not more than $100 upon conviction of the same offense a 2nd or subsequent time within one year.

History: 1981 c. 189; 1987 a. 374; 1991 a. 39; 2003 a. 118; 2009 a. 28, 377; 13.92 (1) (bm) 2.

30.291 Inspections for certain exemptions and permitted activities. (1) For purposes of determining whether an exemption is appropriate under s. 30.12 (1k), (2m) or (2r), 30.123 (6m) or (6r), or 30.20 (1m) or (1r), whether a general permit is appropriate under s. 30.206 (3), or whether authorization to proceed under a general permit is appropriate under s. 30.206 (3r), any employee or other representative of the department, upon presenting his or her credentials, may enter the site and inspect any property on the site.

(3) The department shall provide reasonable advance notice, before entering the site and inspecting the property.

(4) If the owner of the site refuses to give consent for an entry and inspection to determine whether authorization to proceed under a general permit is appropriate under s. 30.206 (3r), the department shall deny authorization to proceed under the general permit and shall allow an application to be submitted for an individual permit for the activity.

History: 2003 a. 118; 2007 a. 204.

30.292 Parties to a violation. (1) Whoever is concerned in the commission of a violation of this chapter for which a forfeiture is imposed is a principal and may be charged with and convicted of the violation although he or she did not directly commit it and although the person who directly committed it has not been convicted of the violation.

(2) A person is concerned in the commission of the violation if the person does any of the following:

(a) Directly commits the violation.

(b) Aids and abets the commission of the violation.

(c) Is a party to a conspiracy with another to commit the violation or advises, hires, counsels or otherwise procures any person to commit it.

History: 1987 a. 374.

30.294 Nuisances, abatement. Every violation of this chapter is declared to be a public nuisance and may be prohibited by injunction and may be abated by legal action brought by any person.

History: 1987 a. 374.

A citizen may bring suit under this section, pursuant to the public trust doctrine, directly against a private party for abatement of a public nuisance when the citizen believes that the DNR has inadequately regulated the private party. When a municipality is a defendant, filing a notice of claim under s. 893.80 (1) (b) is not required if an injunction is sought under this section, whether or not the injunction will be directed against the municipality. Gillen v. City of Neenah, 219 Wis. 2d 806, 580 N.W.2d 628 (1998), 96−2470.

30.298 Penalties. (1) Any person who violates any provision of ss. 30.12 to 30.21 for which a penalty is not provided under the applicable section or by sub. (2) or (3) shall forfeit not less than $100 nor more than $10,000 for the first offense and shall forfeit not less than $500 nor more than $10,000 upon conviction of the same offense a 2nd or subsequent time.

(2) Any person who violates s. 30.18 (2) (a) 1. or 30.195 (1) shall forfeit not less than $500 nor more than $10,000 for the first offense and shall forfeit not less than $1,000 nor more than $10,000 upon conviction of the same offense a 2nd or subsequent time.

(3) Any person who violates a general permit under s. 30.206 or 30.2065 shall forfeit not less than $10 nor more than $500 for the first offense and shall forfeit not less than $50 nor more than $500 upon conviction of the same offense a 2nd or subsequent time.

(4) A violation of a permit, contract or order issued under this chapter is a violation of the statute under which the permit, contract or order was issued.

(5) In addition to the forfeitures specified under subs. (1) to (3), the court may order the defendant to perform or refrain from performing such acts as may be necessary to fully protect and effectuate the public interest in navigable waters. The court may order abatement of a nuisance, restoration of a natural resource or other appropriate action designed to eliminate or minimize any environmental damage caused by the defendant.

History: 1987 a. 374; 2003 a. 118; 2009 a. 391.

SUBCHAPTER III

DEVELOPMENT AND OPERATION OF HARBORS

30.30 Municipal authority to make harbor improvements. Every municipality having navigable waters within or adjoining its boundaries may exercise the following powers:

(1) HARBOR IMPROVEMENT. By proper filling or excavating or dredging and docking, create or improve any inner or outer harbor and such turning basins, slips, canals and other waterways within its boundaries as it determines are necessary.

(2) REPAIRS AND ALTERATIONS. Keep in repair and from time to time alter, extend, enlarge or discontinue any improvement mentioned in sub. (1).

(3) DOCK WALLS AND SHORE PROTECTION WALLS. (a) Either by itself or in conjunction with another municipality, construct, maintain or repair suitable dock walls or shore protection walls along the shore of any waterway adjoining or within the limits of such municipality, exclusive of privately owned slips. Such structures may be located within or without the municipal limits.

(b) Whenever an improvement, alteration, repair or extension of a dock wall or shore protection wall along the bank or shore of any waterway adjoining or within the limits of a municipality is

Electronic reproduction of 2009−10 Wis. Stats. database, current through 2011 Wis. Act 39 and July 25, 2011.

required in order to eliminate menaces to navigation, or to promote the public health, safety or welfare, or to eliminate dilapidation, blight or obsolescence of such dock wall or shore protection wall, the board of harbor commissioners, if such board has been established within the municipality, or the local legislative body if no such board has been created, shall make a determination by resolution that it is essential that such dock wall or shore protection wall be improved, altered, repaired or extended. A certified copy of such resolution shall be served on the owners of the property of which such dock wall or shore protection wall is a part, by either forwarding such certified copy of the resolution by registered mail to the owners or by serving a certified copy of such resolution personally upon such owners if they can be found within the municipality. The resolution shall also specify a period of 90 days within which the owners shall be required to commence work for the improvement, alteration, repair or extension of the dock wall or shore protection wall.

(c) If the owners of the property on which the dock wall or shore protection wall is located fail to notify the board of harbor commissioners or the local legislative body within the 90−day period that the work will be commenced as specified in the resolution, the board of harbor commissioners or the local legislative body shall request the city attorney, village attorney, town attorney or corporation counsel for the commencement of an action in the circuit court in the county in which the property is located for determination of whether or not the improvement, alteration, repair or extension of the dock wall or shore protection wall is required and for the fixing of the time by the court within which time the work must be commenced and completed. The action shall be entitled in the name of the state and the municipality, and the attorney general shall participate on behalf of the state. The complaint shall recite the type of improvement, alteration, repair or extension which is required, the approximate cost thereof, the need for such work as related to the reasons stated in par. (b), and such other allegations as may be pertinent. The owners of the property within which the dock wall or shore protection wall is located shall be named defendants. They shall be permitted to plead as provided for in civil actions. The action shall be brought to trial in the circuit court as promptly as possible. If the circuit court determines that the work shall be performed, it shall make a finding to that effect and enter an order directing the owners of the property to commence the work and to complete it within a period of time fixed by the court in the order, or in the alternative provide that the municipality may complete the work and charge the cost thereof to the owners of the property. If the work is performed by the municipality, the cost shall be recovered from the owners of the property as special assessments for benefits to lands provided for in s. 66.0703. Either party to the action may appeal from the determination of the circuit court and the appeal shall be given preference. Only that portion of the cost of the work shall be assessed against the owners which is of benefit to their lands.

(4) SPECIAL ASSESSMENTS. Make special assessments for benefits to lands on account of any of the improvements specified in sub. (3) and also in those cases where the owners of the property to be benefited by improvements in navigable waters consent in advance to such assessments, and in no other case, but the cost of protecting the ends of public streets and highways and other public grounds shall be paid wholly by the municipality.

(5) ACQUISITION OF LAND. Acquire such lands or interests therein as it deems necessary for properly carrying out its powers under this chapter, including such lands outside the municipal limits as are necessary to protect its property or to carry out its powers under sub. (3). Such acquisition may be by condemnation proceedings.

(6) COOPERATION WITH FEDERAL GOVERNMENT IN HARBOR IMPROVEMENTS. Prepare the necessary plats and otherwise cooperate with the federal government when it indicates its intention to aid in the improvement of any harbor over which the municipality has jurisdiction, including the authority granted by s. 66.0315. If the municipality has established a board of harbor commissioners, such board shall have charge of the preparation of the plats and other necessary cooperation. The title to any lands acquired for the purpose of such harbor improvement may be transferred to the U.S. government for use in improving the harbor of the municipality.

(7) DOING OF WORK. Contract for the doing of the work authorized by this section or purchase the necessary equipment for the doing of the work itself, but if the municipality has established a board of harbor commissioners such board shall have charge of the letting of contracts and shall supervise the doing of the work, except as provided in ss. 30.31 (1) and 30.32 (2).

(8) LEASE OF WHARFING PRIVILEGES. Lease the wharfing privileges of navigable waters at the ends of streets, giving preference to owners of adjoining land, and prescribe or regulate the fees to be charged for wharfage at such places. No buildings shall be erected on the ends of streets, and a free passage over the same for all persons with their baggage shall be reserved; but nothing herein shall be construed to prohibit the erection of public buildings by a municipality within a filled in area of a lake or river where such municipality has been granted specific authority therefor by the legislature, or in conjunction therewith, in any street end or approaches thereto. No such construction on any street end or approaches shall prevent access to the navigable water. If the municipality has established a board of harbor commissioners, the municipality may delegate to such board the powers conferred by this subsection.

History: 1977 c. 187 s. 134; 1983 a. 219; 1989 a. 31; 1993 a. 246; 1999 a. 150 s. 672.

Judicial Council Note, 1983: Sub. (3) (c) is amended to replace the appeal deadline of 30 days after entry of the order by the standard time specified in s. 808.04 (1), stats. The subsection is further amended to eliminate the superfluous provision that the appeal be perfected in the same manner as other civil appeals. The manner of perfecting civil appeals is established by s. 809.11, stats. [Bill 151−S]

30.31 Procedural and other requirements to be followed in making harbor improvements. (1) SUPERVISION OF WORK. In exercising the powers granted by s. 30.30 (1) to (3) a municipality shall be governed by the law governing the laying out, improvement and repair of streets and bridges in such municipality, so far as applicable, except that no petition of property owners for doing any such work is necessary. If the municipality has established a board of harbor commissioners, such board shall be in charge of the work unless the board determines that it is not equipped to supervise the work and by resolution delegates such function to the agency which ordinarily performs such function for the municipality. If the municipality does not have a board of harbor commissioners, the municipality's board of public works or, in the event there is no such board, the municipality's governing body shall be in charge of the work.

(2) WORK REQUIRING APPROVAL OF STATE OR FEDERAL GOVERNMENT. No work for which the approval of the department or of the United States is required shall be commenced unless the plans and specifications for such work have been submitted to and approved by the department or the proper officer of the United States, as the case may be. When the plans and specifications have been so approved, the work shall be done only in accordance with such plans and specifications.

(3) GOVERNMENT AID IN DREDGING OF HARBOR CHANNELS AND FLOOD CONTROL PROJECTS. Whenever the U.S. government indicates its intention to aid in any flood control project or in the improvement of any harbor by dredging of harbor channels at federal expense, subject to the proviso that the local interests save the federal government harmless from all liability and claims for damages resulting from such project or dredging, the governing body of such municipality may, by resolution, assume liability for and on behalf of both public and private ownership adjacent to, within, under and over the channels, land area and construction works in flood control projects, involved in such federal projects. Such municipality may provide adequate insurance coverage, indemnifying such municipality for all damage resulting from such project or dredging.

2009−10 Wis. Stats. database updated and current through 2011 Wis. Act 39 and July 25, 2011. Statutory changes effective on or prior to 9−1−11 are printed as if currently in effect. Statutory changes effective after 9−1−11 are designated by NOTES. See Are The Statutes on this Website Official?

Electronic reproduction of 2009−10 Wis. Stats. database, current through 2011 Wis. Act 39 and July 25, 2011.

(4) ACQUISITION OF LAND. In acquiring land by condemnation for any of the purposes specified in this chapter, a municipality shall be governed by the law relating to condemnation of land for public grounds or street purposes. Whenever land is acquired through a land contract arrangement, such contract may create a lien on such lands for the purchase price and interest thereon but shall not create any liability therefor on the part of the municipality.

(5) COOPERATION AMONG MUNICIPALITIES. Whenever 2 or more municipalities propose to cooperate in erecting, maintaining or repairing a dock wall or shore protection wall, their governing bodies shall first meet and adopt a method of proceeding and a plan of apportioning to each its share of the entire cost. Such method of proceeding and plan of apportionment shall be embodied in a resolution adopted by the governing bodies of the cooperating municipalities acting jointly and later such resolution shall be adopted by each of the governing bodies acting separately. Municipalities acting under this section shall have the powers conferred by s. 66.0301.

(6) SPECIAL ASSESSMENTS. Special assessments for benefits to lands, when authorized by s. 30.30 (4), shall be made and enforced as provided by s. 66.0703, except that at any time within the 90−day period immediately following the publication of the final resolution as required by s. 66.0703 (8) (d), the owner of any property along which such improvement is to be made may elect to make the improvement along the owner's property at the owner's expense in accordance with the approved plans and specifications or in a manner which conforms to good engineering practice and which provides for materials and designs which, with respect to strength and permanence, are at least equal to the requirements of the approved plans and specifications. If the owner makes the improvement at the owner's expense, no assessment of benefits shall be made therefor. If such owner fails to commence the work within the 90−day period specified herein or fails to carry on and complete the work with due diligence, the work may be done or completed by the municipality and assessment of benefits made therefor.

(7) BUILDING PERMITS FOR MARINE SHIPPING STRUCTURES. Before any permit for building or improving any structure directly affecting marine shipping is issued by a municipality or any of its departments, the plans therefor shall be submitted to the municipality's board of harbor commissioners, if any. If the board finds that the location or design of the structure will adversely affect the orderly development of the harbor or the orderly movement of traffic to or within the harbor, the board may disapprove the plans, giving its specific reasons for such disapproval. No permit for building or improving any such structure shall be issued until the plans therefor have been approved by the board of harbor commissioners. The governing body of the municipality may delegate to the board of harbor commissioners the power to issue permits for construction of dock walls.

History: 1991 a. 316; 1999 a. 150 s. 672.

30.32 Contracts; competitive bidding; exceptions. **(1)** COMPETITIVE BIDDING REQUIRED. Except as otherwise provided in this section, all work to be let relative to the construction, repair or maintenance of a harbor or harbor facility and all purchases of equipment, supplies or materials relative to carrying out the purposes of the statutes relating to harbors shall be by contract awarded to the lowest competent and reliable bidder in accordance with the laws of this state and ordinances then applicable to such municipality with reference to the letting of public work.

(2) BOARD OF HARBOR COMMISSIONERS TO HAVE CHARGE OF LETTING CONTRACTS. If a municipality has established a board of harbor commissioners, such board shall be in charge of the letting of contracts relative to construction, repair or maintenance of a harbor or harbor facility or the purchase of equipment, supplies or materials relative to carrying out the purposes of the statutes relating to harbors, in lieu of the officer or agency which otherwise would be in charge of the letting of public work, except that if the board determines that it is not equipped to handle the contracting formalities required under this section, it may by resolution delegate all or part of its functions under this section to the agency which ordinarily performs such functions for the municipality.

(3) EXCEPTIONS TO COMPETITIVE BIDDING. Subsection (1) does not apply in any of the following cases, and work to be done or equipment, supplies or materials to be acquired may be contracted for or acquired without competitive bidding and in such manner as the officer or agency in charge of the work or acquisition may direct:

(a) The work to be done or equipment, supplies or materials to be acquired will cost less than $25,000.

(b) The work to be done or equipment, supplies or materials to be acquired involve marine construction or repair work requiring the use of floating scows, pile drivers or other floating equipment and will involve an expenditure of less than $50,000.

(c) The equipment, supplies or materials to be acquired is a patented article or process or an article or process made by one party only.

(d) The work to be done or equipment, supplies or materials to be acquired involves an emergency repair as set forth in sub. (4).

(4) EMERGENCY REPAIRS. Whenever repairs become necessary to any harbor facility which, in the judgment of the official having executive charge of such facility, constitutes an emergency in that it interrupts the ordinary use and operation of such facility, such official may order such repairs to be made by some competent party without compliance with sub. (1) or the intervention of a formal contract. In all cases of such emergency repairs the official causing the repairs to be made shall report the circumstances thereof, including the agreed price or estimated costs of the repairs, to the officer or agency in charge of the operation of the harbor and shall also forthwith send a copy of such report to the clerk of the municipality or, in the case of a city, to the chief auditing officer. Whenever any party is liable, under a lease or otherwise, to reimburse such municipality for repairs or cost of maintenance of such harbor facility, the official causing the repairs to be made shall also send a copy of such report to the party so liable.

(5) COMPETENCY AND RELIABILITY OF BIDDERS. Whenever any bidder for any work to be let by an officer or agency in charge of a harbor is, in the judgment of such officer or agency, incompetent or otherwise unreliable for the performance of the work for which the bidder bids, the officer or agency may accept the bid of the person who, in its judgment, is the lowest competent and reliable bidder for such work, stating its reasons therefor, or may relet the same anew. Such officer or agency may permit a sum of money or a certified check payable to its order to be filed with any bid or proposal in such an amount as in its judgment will save the municipality from any loss if the bidder fails to execute a contract pursuant to law, in case the bidder's bid is accepted and the contract awarded to the bidder.

(6) CONTRACTS TO PROVIDE FOR LIQUIDATED DAMAGES. Every contract executed pursuant to sub. (1) shall contain either of the following agreements on the part of the contractor and the contractor's sureties:

(a) An agreement that in case such contractor fails to fully and completely perform the contract within the time therein limited for the performance thereof, the contractor shall pay to the municipality as liquidated damages for such default, a fixed sum to be named in the contract, which shall be such a sum as in the judgment of the officer or agency in charge of letting the contract will save the municipality harmless on account of such default and insure the prompt completion of the contract; or

(b) An agreement that in case such contractor fails to fully and completely perform the contractor's part of the contract within the time therein limited for the performance thereof, the contractor shall pay to the municipality as liquidated damages for such default, a definite sum to be named in the contract for each day's delay in completing such contract after the time therein limited for its completion, which daily sum shall be such an amount as in the

Electronic reproduction of 2009−10 Wis. Stats. database, current through 2011 Wis. Act 39 and July 25, 2011.

judgment of the officer or agency in charge of letting the contract will save the municipality harmless on account of such default and insure the prompt completion of the contract.

(7) CONTRACTS TO BE EXECUTED BY SURETIES. Every contract executed pursuant to sub. (1) shall also be executed by at least 2 sufficient sureties, or a surety company, to be approved by the officer or agency letting the contract. Such sureties or surety company shall guarantee the full performance of the contract by the contractor to the satisfaction of such officer or agency, according to the plans and specifications of such officer or agency, and shall be liable for such performance of the contract, as sureties, in an amount equal to such officer's or agency's estimate of the aggregate cost of the work.

(8) PAYMENT BEFORE COMPLETION OF CONTRACT. When a contractor proceeds properly and with due diligence to perform a contract, the officer or agency which let the contract may, in its discretion, from time to time as the work progresses, grant to the contractor an estimate of the amount already earned for the work done, withholding in all cases until final completion and acceptance of the contract 15% of such estimate when such estimate is less than $100,000, and 10% of such estimate when such estimate is $100,000 or over, which shall entitle the contractor to receive such estimate less the amount withheld.

(9) OPTIONAL CONTRACT PROVISIONS. The officer or agency in charge of negotiating the contract may insert in the specifications of the work reasonable and lawful conditions as to hours of labor and the residence and character of workers to be employed by the contractor and especially, so far as is practicable in the judgment of such officer or agency, such reasonable and lawful conditions as will tend to confine employment on such work, in whole or in part, to permanent and bona fide residents of this state. The officer or agency may do any part of such work by day labor under such conditions as it prescribes. The officer or agency may demand of such bidders and contractors that all contracts shall be let subject to chs. 102, 103 and 105, to the end that the officer or agency and municipality shall be held harmless. The officer or agency may reject any or all bids or parts thereof for any such work or supplies or materials.

(10) CONFLICTS WITH FEDERAL REGULATIONS. Contracts for projects involving federal funds shall be let under such regulations and conditions as are prescribed by the federal agency controlling such funds, so far as such regulations and conditions conflict with this section.

History: 1979 c. 89; 1981 c. 208; 1991 a. 197, 316; 1995 a. 27.

30.33 Harbor railway belt lines. (1) BOARD TO HAVE POWERS OF RAILROAD CORPORATION. Any municipality operating a public harbor through a board of harbor commissioners may, through such board, construct, maintain or operate railway facilities or a harbor belt line connecting various harbor facilities with one another or with other railroads within the municipality or its vicinity. The board of harbor commissioners is granted all of the rights, powers and privileges conferred upon railroad corporations by ss. 190.02 and 190.025 (3), except such rights, powers and privileges as are conferred upon railroad corporations by s. 190.02 (9). Such facilities or belt line may be constructed, maintained or operated partly outside the corporate limits of the municipality. In constructing, maintaining or operating such facilities or belt line, the board of harbor commissioners has the powers and privileges of railroad corporations and shall be subject to the same restrictions as railroad corporations and to the supervision of the office of the commissioner of railroads, except as to the system of accounting and the payment of wages to employees.

(2) MUNICIPALITY MAY ORGANIZE HARBOR RAILWAY CORPORATION. Any municipality mentioned in sub. (1) may, with the consent of its board of harbor commissioners, organize a railroad corporation for the purpose of constructing, maintaining or operating a harbor belt line or may subscribe for stock in an existing railroad corporation organized for such purpose. If the municipality decides to organize a railroad corporation for such purpose, the governing body thereof may, by resolution, authorize the chief executive officer or presiding officer of such municipality to act, together with 4 citizens to be designated by the officer, as incorporators of such company. Such incorporators shall proceed to incorporate the railroad corporation in accordance with chs. 190 to 192, so far as applicable. Such harbor railroad corporation is subject to the supervisory and regulatory powers of the office of the commissioner of railroads to the same extent as other railroad corporations. The municipality may subscribe to the stock of such harbor railroad corporation and may pay for such stock out of any funds it may lawfully have available for that purpose, including the proceeds of harbor improvement bonds.

History: 1977 c. 29 s. 1654 (9) (f); 1977 c. 273; 1981 c. 347 s. 80 (2); 1993 a. 16, 123; 1997 a. 254.

30.34 Financing harbor improvements and operations generally. (1) HARBOR FUND TO BE CREATED. All municipalities operating a public harbor through a board of harbor commissioners shall establish in the municipal treasury a revolving fund to be known as the "harbor fund". Moneys for such fund may be raised by appropriation from the general fund or by taxation or loan as other moneys in the general fund are raised. Moneys in such fund may be expended only as provided in s. 30.38 (13).

(2) FINANCING DOCK WALLS AND SHORE PROTECTION WALLS. A municipality may pay either or both the assessable and nonassessable parts of the cost of the construction, maintenance or repair of any dock wall or shore protection wall, authorized by s. 30.30 (3), out of its general fund or other available funds, or it may finance such work through the issuance of its negotiable bonds as provided in ch. 67, except that it is not necessary to include such bonds in the municipal budget or to submit the question of their issuance to a referendum vote of the electors. The bonds shall be serial bonds, payable at any time within 10 years and shall bear interest payable either annually or semiannually as the governing body determines. The bonds shall be a direct obligation of the municipality and the full faith and credit of the municipality shall be pledged for their payment. No such bonds shall be issued unless at or before the time of their issuance the governing body levies a direct annual tax sufficient to pay the principal and interest thereon as they fall due.

(3) FINANCING BY MEANS OF NOTES, BONDS OR ASSIGNMENTS OF NET PROFITS. (a) Any municipality may, with the consent of its board of harbor commissioners, finance the cost of acquisition, construction, alteration or repair of any harbor facility by issuing evidences of indebtedness payable only out of the revenue obtained from the public harbor facilities. Such evidences of indebtedness may be revenue bonds, refunding bonds or bond anticipation notes issued under s. 30.35 or 66.1103 or may be pledges or assignments of net profits, issued pursuant to s. 66.0621 (5) as if the harbor facility were a public utility.

(b) The moneys received from the sale of such evidences of indebtedness shall be used solely for the specific purpose for which they were issued. The municipality issuing them shall not be deemed obligated or indebted thereon, and no funds or money of such municipality, except the revenues from the public harbor facilities, shall ever be used for payment or redemption of the evidences of indebtedness, except that the municipality issuing such evidences of indebtedness may at any time, with the consent of its auditing officer or committee, and by a vote of two−thirds of its governing body, assume the obligation of paying the principal and interest of such evidences of indebtedness as are then outstanding. Thereafter, such evidences shall in every respect be held to be outstanding indebtedness of such municipality. The governing body of any municipality assuming an indebtedness under this paragraph shall levy an annual irrepealable tax to pay interest thereon and discharge the principal thereof as required by article XI, section 3, of the constitution.

(c) The holders of evidences of indebtedness issued as authorized by this subsection shall have the rights accorded by s. 66.0621 (4) (b) to holders of revenue bonds issued pursuant to s.

Electronic reproduction of 2009−10 Wis. Stats. database, current through 2011 Wis. Act 39 and July 25, 2011.

66.0621, but in case of sale by order of any court, there shall be sold only the facility itself without the land on which it is erected. The purchaser at such sale may either remove such facility or may continue to operate the same and collect the revenue thereof, in a fair and businesslike manner, under the supervision of the court, until the outstanding evidences of indebtedness, together with interest until payment, have been paid, together with all costs and charges as determined by the court.

(4) EMERGENCY REPAIR FUND. Any municipality having established a board of harbor commissioners to operate its harbor facilities may create a contingent fund for the purpose of permitting the secretary of the board to pay for repairs to harbor facilities which constitute emergency repairs within the meaning of s. 30.32 (4). The secretary may pay for such repairs out of such fund on the secretary's signature alone.

(5) OTHER FINANCING. Nothing in this section is intended to prevent a municipality not operating its harbor as a commercial enterprise from raising and appropriating funds for construction, improvement, alteration or repair of its harbor and harbor facilities in the same manner as it may raise and appropriate funds for other legitimate municipal purposes.

History: 1973 c. 172; 1981 c. 238; 1983 a. 192; 1983 a. 207 ss. 3, 93 (3); 1991 a. 316; 1999 a. 150 s. 672.

30.35 Financing harbor improvements through bonds or notes. (1) ISSUANCE OF BONDS OR NOTES TO BE AUTHORIZED BY ORDINANCE. Whenever the governing body of a municipality, after having obtained the consent of the board of harbor commissioners, determines to finance the acquisition, construction, alteration or repair of a harbor facility through revenue bonds, refunding bonds or bond anticipation notes, the governing body shall proceed by ordinance to authorize the issuance and sale of such bonds or notes. The ordinance shall set forth the purposes for which the bonds or notes are to be issued and shall state either the amount of such issue or an amount which such issue shall not exceed. The ordinance shall be offered and read at a regular meeting of the governing body and a notice of the amount and purposes of such bonds or notes shall be published as a class 1 notice, under ch. 985, not less than 10 days prior to the meeting at which such ordinance is to be considered for final passage. The ordinance is not valid unless supported by the affirmative vote of at least three−fourths of all of the members of the governing body taken at a regular meeting held after such publication. No referendum is required before such revenue bonds, refunding bonds or bond anticipation notes are issued.

(2) CONTENTS OF ORDINANCE AUTHORIZING BOND OR NOTE ISSUE. The ordinance authorizing the issuance of revenue bonds, refunding bonds or bond anticipation notes constitutes a contract with the holder of such bonds or notes and shall include covenants and provisions for the security of the bondholders and noteholders and the payment of the bonds or notes as the governing body deems necessary or desirable for the security of the bondholders and noteholders, including, but not limited to, provisions for the establishment of adequate rates or charges for the use of the public harbor facilities, insurance against loss and covenants against the sale or alienation of such facilities and establishment of budgets relating to operation of such facilities. Any such ordinance shall contain provisions for:

(a) Maintenance and operation of the public harbor facilities.

(b) The establishment of a debt amortization and interest fund sufficient to provide for the payment of the principal of, and interest on, the bonds or notes authorized by the ordinance.

(c) The establishment of the bond proceeds funds and reserve funds that the governing body believes necessary or desirable for the security of the bondholders and noteholders.

(2a) MUNICIPALITY TO FIX ADEQUATE RATES. The municipality shall fix rates and charges for the use of the harbor facilities sufficient for the payment of the cost of operation and maintenance of such facilities, for the payment of principal of and interest on any indebtedness incurred for such harbor facilities, and to provide revenues sufficient to comply with any covenants or agreements made by the municipality in any ordinance providing for the issuance of obligations to pay the cost of the acquisition, construction, alteration or repair of such harbor facilities. Equal rates and charges shall be fixed for equal services except that a municipality may fix higher rates and charges for boats that are used for recreational purposes, that do not carry passengers for a fee and that are one or more of the following:

(a) Exempt from the certificate of number and registration requirements under s. 30.51 (2) (a) 3., 5. or 9.

(b) Exempt from the registration requirement under s. 30.51 (2) (c) 3.

(c) Owned by persons who are not residents of this state.

(2m) TERMS OF THE BONDS AND NOTES. The provisions applicable to revenue bonds under s. 66.0621 (4) (i) and (L) apply to revenue bonds, refunding bonds and bond anticipation notes under this section. The provisions applicable to revenue bonds under s. 66.0621 (4) (a) shall apply to revenue bonds, refunding bonds and bond anticipation notes under this section except that the ordinance or resolution authorizing the bonds or notes may specify the time they mature, the amounts in which they mature, the conditions of redemption, the number of times they are issuable and the ranking of the issues.

(3) FORM OF THE BONDS OR NOTES. Revenue bonds, refunding bonds and bond anticipation notes shall be in the form designated by the governing body, shall be executed as provided in s. 67.08 (1) and may be registered under s. 67.09.

(4) BONDS AND NOTES NOT AN OBLIGATION OF THE MUNICIPALITY. Bonds and notes issued pursuant to this section shall not be the general obligation of the municipality and shall expressly so state on their face. Any indebtedness created pursuant to this section is deemed to be incurred for a public utility, and shall not be included in indebtedness subject to any debt limitation.

(5) SALE OF THE BONDS OR NOTES. The governing body may authorize the purchase of a part or all of such revenue bonds, refunding bonds or bond anticipation notes out of moneys accruing to or held in the debt amortization and interest fund or any other municipal funds not immediately needed, and such funds may be invested in such bonds or notes. If the municipality does not purchase such bonds or notes, as authorized by this subsection, or determines to sell such bonds or notes after having so purchased them, the bonds or notes shall be offered at sale in the manner and at the time and place that the governing body determines. In cities of the 1st class, such bonds or notes shall be sold under the direction of the public debt commission.

(6) BONDHOLDERS AND NOTEHOLDERS HAVE LIEN. Title to all of the harbor facilities for which revenue bonds, refunding bonds or bond anticipation notes are issued remains in the municipality, but a statutory lien exists in favor of the bondholders and noteholders against the facilities which have been acquired, constructed, altered or remodeled and the cost of which has been financed with funds obtained through the issuance of such bonds and notes. To provide further security for the bondholders and noteholders, the ordinance or resolution authorizing the issuance of revenue bonds, refunding bonds or bond anticipation notes may provide for a pledge of the revenues of the facilities, including, if the facilities are leased under sub. (6), an assignment of all or part of the municipality's rights as lessor.

(7) BONDS AND NOTES MAY BE PURCHASED BY FIDUCIARIES. Bonds and notes issued pursuant to this section are hereby made securities in which any of the following may legally invest any funds, including capital, belonging to them or within their control:

(a) State and municipal officers and bodies.

(b) Banks, bankers, trust companies, savings banks, building and loan associations, savings and loan associations, investment companies and other persons carrying on a banking business.

(d) Personal representatives, guardians, trustees, and other fiduciaries.

Electronic reproduction of 2009−10 Wis. Stats. database, current through 2011 Wis. Act 39 and July 25, 2011.

(e) Persons authorized to invest in bonds or other obligations of the state.

(8) BONDS AND NOTES MAY BE ACCEPTED BY STATE OR MUNICIPAL OFFICER. The bonds and notes issued pursuant to this section are made securities which may properly and legally be deposited with and shall be received by any state or municipal officer or agency for which the deposit of bonds or other obligations of the state is authorized.

History: 1973 c. 172; 1979 c. 279; 1981 c. 238; 1983 a. 24; 1983 a. 207 s. 93 (3); 1991 a. 39; 1999 a. 150 s. 672; 2001 a. 16, 102.

30.37 Boards of harbor commissioners authorized. (1) WHO MAY CREATE. (a) Except as provided in par. (b), a municipality situated on a navigable waterway may create a board of harbor commissioners to exercise the powers and perform the duties conferred upon such boards by law.

(b) A county may not create a board of harbor commissioners if there exists an active town, village or city board of harbor commissioners within the county.

(2) HOW CREATED. Boards of harbor commissioners shall be created by resolution of the governing body of the municipality. Such resolution shall state whether the board is to be composed of 3, 5, 7 or 9 members and shall fix the date of commencement of the original term of office. Such resolution also shall state the length of the term of each member of the first board to be appointed, so that the term of one or more will expire in one year, one or more in 2 years, and one or more in 3 years.

(3) APPOINTMENTS, TERMS, QUALIFICATION AND COMPENSATION OF MEMBERS. As soon as possible after the passage of the resolution creating such board, the chief executive officer of the municipality, in the case of a city or village board of harbor commissioners, or the chairperson of the town board or the chairperson of the county board, in the case of a town or county board of harbor commissioners, shall appoint the members of the board and designate the length of the term of each member thereof in accordance with the resolution creating the board. Thereafter, at the expiration of the term of any member, he or she shall appoint a successor for a 3−year term. All appointments are subject to confirmation by the governing body of the municipality. A person appointed to the board shall be a qualified elector of the municipality which created the board and a resident of the municipality for at least 3 years. Not more than one member of the governing body of such municipality is eligible for appointment to the board. A person appointed to the board shall serve until a successor has been appointed and qualifies. Members of the board shall receive no compensation for their services but they shall be reimbursed for expenses actually and necessarily incurred in the performance of their duties.

(4) ORGANIZATION; OFFICERS. As soon as possible after the appointment and confirmation of the members of the board, they shall meet and organize by electing from among their members a president and a vice president. The board shall hold meetings at such times and places as it determines and may adopt such bylaws consistent with law as seem practicable for its government.

(5) EMPLOYEES. The board shall employ a secretary, not a member of the board, and fix the secretary's salary, and may employ such other persons, including a harbor master, as it deems necessary for the proper performance of its functions, and fix their duties and compensation. If the municipality which created the board has a civil service system for its employees, all appointments shall be made pursuant to such system.

(6) EFFECT OF REVISION ON EXISTING HARBOR BOARDS. Boards of harbor commissioners, harbor commissions or dock and harbor boards in existence on January 1, 1960 are deemed to be valid boards of harbor commissioners as if created pursuant to this section and are vested with all the powers and duties conferred upon boards of harbor commissioners by this chapter. The members of such boards may continue to hold office until their terms expire, notwithstanding any provision of this section which would otherwise disqualify them, but appointments made after January 1, 1960 shall be made only in accordance with this section. Nothing in this subsection is intended to prevent a municipality by resolution from abolishing its board of harbor commissioners, harbor commission or dock and harbor board.

(7) MILWAUKEE COUNTY. Milwaukee County, with respect to the land ceded or granted to Milwaukee County as described in 1997 Wisconsin Act 70, section 3, may directly exercise all of the powers and perform all of the duties conferred on a board of harbor commissioners under ss. 30.34, 30.35 and 30.38, but Milwaukee County may not create a board of harbor commissioners if sub. (1) (b) applies. Milwaukee County shall have exclusive jurisdiction over the operation, administration, maintenance, improvement, alteration and repair of any marina facility or marina related anchorage located on this land.

History: 1983 a. 192; 1987 a. 289; 1989 a. 31; 1989 a. 56. s. 258; 1991 a. 316; 1997 a. 70.

30.38 Powers and duties of boards of harbor commissioners. (1) RELATIONSHIP TO MUNICIPALITY'S GOVERNING BODY. (a) Except as otherwise expressly provided, a board of harbor commissioners may exercise its powers and perform its duties without first obtaining the consent of the governing body of the municipality which created it, but in no event is the board empowered to financially obligate in any manner this state without the consent of the state legislature, or the municipality in which it operates without the consent of the governing body of such municipality.

(b) It is the public policy of this state that, so far as possible, the board of harbor commissioners shall have exclusive control of the commercial aspects of the day−to−day operation of the public harbor and public harbor facilities, as set forth in sub. (8), and the governing body of the municipality shall have exclusive control of the governmental aspects relating to public health, order and safety. No municipality may exercise the powers set forth in subs. (8) (a) or (9), except through a board of harbor commissioners.

(c) Insofar as consistent with the principle set forth in par. (b), all powers not expressly conferred upon the board of harbor commissioners are reserved to the governing body of the municipality.

(2) MUNICIPAL DEPARTMENTS TO ASSIST BOARD OF HARBOR COMMISSIONERS. A board of harbor commissioners may make written requests to any other officer or agency of the municipality for assistance in the performance of its duties and such officer or agency shall comply with such request if the requested assistance involves the type of work normally performed by such officer or agency and the assistance will not substantially affect the budget of such officer or agency. If a difference arises between the officer or agency and the board as to whether such officer or agency is required to render the requested assistance, the ruling of the governing body of the municipality with respect thereto shall be final.

(3) CONTRACT PROCEDURES. In the letting of work relative to the construction, repair or maintenance of a harbor or harbor facility or in the purchase of equipment, supplies or materials relative to carrying out its powers and duties, a board of harbor commissioners shall be governed by the procedures and requirements set forth in s. 30.32.

(4) TITLE TO LANDS AND FACILITIES. Title to harbor lands and facilities shall vest in the municipality.

(5) PLANNING AND EFFECTUATING HARBOR IMPROVEMENTS. A board of harbor commissioners shall make such plans as it deems necessary for the improvement of the harbor over which it has jurisdiction, so as to adequately provide for the needs of commerce and shipping, including the efficient handling of freight and passenger traffic between the waterways of the harbor and air and land transportation terminals. Among other things, such planning may include plans for the acquisition of land for harbor purposes, including industrial sites, plans for laying out service roads, plans for the construction and acquisition of harbor facilities designed to enlarge or improve harbor operations, and plans for the improvement of publicly−owned harbor facilities. In planning for service roads the board shall seek the advice and cooperation of

Electronic reproduction of 2009−10 Wis. Stats. database, current through 2011 Wis. Act 39 and July 25, 2011.

the local highway authorities and in all cases shall seek the advice and cooperation of the municipal planning agency, if any. The board shall not carry out any such plans until they have been submitted to and approved by the governing body of the municipality. When such plans have been so approved, either as submitted or in modified form, the board shall be in charge of carrying such plans into effect.

(6) LEASING HARBOR LANDS AND FACILITIES. A board of harbor commissioners may lease to any party, either for exclusive or common use, such parcels of publicly−owned harbor lands or such publicly−owned harbor facilities as it deems expedient, provided such lease is for any purpose or use requiring, involving or connected with the construction, operation, maintenance or use of any harbor facility. Such board may also lease, for revenue purposes, any of the publicly−owned harbor lands under its jurisdiction, not actually in use for harbor purposes, to be used for any purpose deemed satisfactory to the board. No leases of municipally−owned harbor lands or harbor facilities made pursuant to this subsection are valid until approved by the governing body of the municipality, unless such governing body has authorized the board to make such leases without its approval.

(7) MAINTENANCE OF HARBOR FACILITIES. The board of harbor commissioners shall be in charge of the maintenance of the public harbor facilities. To the extent that funds, including revenue from harbor operations, are available for such purpose, the board may make repairs to harbor facilities without first obtaining the consent of the governing body of the municipality.

(8) HARBOR OPERATION. (a) A board of harbor commissioners shall have exclusive control over the commercial aspects of the day−to−day operation of the public harbor and public harbor facilities. Among other things the board may:

1. Operate publicly−owned or leased wharf and terminal facilities and handling equipment.

2. Operate publicly−owned railroad beltlines or other essential railroad facilities, or lease railroad facilities.

3. Assign berths at publicly−owned or leased harbor facilities.

4. Maintain guards at publicly−owned or leased harbor facilities.

(b) When so authorized by the municipal governing body, a board of harbor commissioners also may:

1. Operate airport facilities owned or leased by the municipality and located on or contiguous to the harbor lands.

2. Operate municipal harbor craft, such as fireboats, tugs, dredges, barges, lighters and inspection boats.

3. Acquire, charter and operate vessels for use in domestic and foreign commerce.

(c) In lieu of operating the publicly−owned harbor facilities, a board of harbor commissioners may lease such facilities for operation by the lessee, but the board shall retain such control over the lessee as will enable it to make certain that the harbor is operated in accordance with the public policy set forth in par. (e). No lease of municipally−owned facilities is valid until approved by the governing body of the municipality, unless such governing body has authorized the board to make such lease without its approval.

(d) A board of harbor commissioners may adopt rules to facilitate the exercise of its powers and duties under this subsection. Copies of such rules shall be made available to interested persons upon request.

(e) In exercising its powers under this subsection, a board of harbor commissioners shall be guided by a policy designed to maintain the operation of the harbor in a continuous, peaceful and efficient manner and shall maintain its services so as to effectuate this policy and shall handle without discrimination, any valid and legitimate cargo. But nothing in this subsection shall prevent the board or its lessees from adopting reasonable rules regarding noxious cargo or explosives.

(f) A board of harbor commissioners shall have no jurisdiction over public bridges.

(9) FIXING FEES. A board of harbor commissioners shall fix and regulate all fees and charges for use of the publicly owned and operated harbor facilities and for other services rendered. All such fees and charges are subject to the approval of the governing body of the municipality. Copies of the schedule of fees and charges shall be made available to interested persons upon request. Equal fees shall be charged for equal services except that higher fees may be charged for boats that are used for recreational purposes, that do not carry passengers for a fee and that are one or more of the following:

(a) Exempt from the certificate of number and registration requirements under s. 30.51 (2) (a) 3., 5. or 9.

(b) Exempt from the registration requirement under s. 30.51 (2) (c) 3.

(c) Owned by persons who are not residents of this state.

(10) ACCOUNTS AND STATISTICS. A board of harbor commissioners shall maintain an adequate system of accounts with respect to its operations, which system of accounts shall be in conformity with the system used by the municipality. The board also shall maintain statistics with respect to the traffic and finances of the port.

(11) PROMOTION ACTIVITIES. A board of harbor commissioners may engage in activities designed to promote trade and traffic through the port and for this purpose may, among other things, make representations before official public bodies and intervene in rate case proceedings.

(12) RESPONSIBILITIES RELATIVE TO JOINT HARBORS. If a board of harbor commissioners is in charge of a harbor which lies partly in this state and partly in another state, the board shall be the official body that represents the interests of the municipality that created the board in such joint harbor, including the harbor's facilities and shipping interests. The board shall study the needs of the joint harbor, including the harbor's facilities and shipping interests, with reference to both its joint aspects and its aspects relating to this state. The board from time to time shall make such recommendations, as the board considers needful and practical, to the proper authorities for the proper maintenance, improvement and betterment of the joint harbor, including the harbor's facilities and shipping interests. The board may take steps within its power as seem practicable to cause such recommendations to be carried into effect. The board may also meet and act jointly with the agency representing the interests of the other state in the joint harbor, on matters of common interest and which affect the joint harbor including the harbor's facilities. It may join with such agency in adopting a general plan for the development of the joint harbor and in making such other recommendations as seem advisable and may act jointly with such agency in doing all things within its power to cause such plans and recommendations to be carried into effect.

(13) FUNDS; DISBURSEMENTS; NET REVENUE. (a) All moneys appropriated to a board of harbor commissioners, all revenues derived from the operation of the public harbor except in the case of a joint harbor revenue from joint improvements before division thereof, and all other revenues of the board shall be paid into the municipal treasury and credited to the harbor fund, except that revenues assigned or pledged under s. 30.35 (6) or 66.1103 shall be paid into the fund or funds provided for in the ordinance or resolution authorizing the issuance of the bonds and shall be applied in accordance with that ordinance or resolution.

(b) Subject to the limitations and conditions otherwise expressed in this section and to a budget approved by the municipal governing body, moneys in the harbor fund may be used for the acquisition, construction, improvement, repair, maintenance, operation and administration of the public harbor and harbor facilities and for the acquisition, chartering and operation of vessels under sub. (8) (b) 3. Except as provided in s. 30.34 (4), such mon-

2009−10 Wis. Stats. database updated and current through 2011 Wis. Act 39 and July 25, 2011. Statutory changes effective on or prior to 9−1−11 are printed as if currently in effect. Statutory changes effective after 9−1−11 are designated by NOTES. See Are The Statutes on this Website Official?

Electronic reproduction of 2009−10 Wis. Stats. database, current through 2011 Wis. Act 39 and July 25, 2011.

eys shall be paid out of the harbor fund only on orders signed by the president and secretary of the board, or some other official authorized by the board, after the allowance of claims by the board or on orders entered in the minutes of the board. Disbursements from the harbor fund shall be audited as other municipal disbursements are audited; however, the board may determine on some other procedure it deems appropriate for the consideration of claims and the reporting thereof notwithstanding the provisions of this paragraph. If a procedure other than that set forth in this paragraph is prescribed by the board, the approval of the chief auditing officer shall be obtained.

(c) At the end of each fiscal year, the board shall compute its net revenue, if any, after paying the costs of operating, maintaining and improving the harbor. Thereupon, the board shall certify the amount of such net revenue, if any, to the municipal treasurer who shall cause such amount to be transferred from the harbor fund to the general fund of the municipality.

(14) REPORTS OF EXPENDITURES. A board of harbor commissioners shall, on or before October 1 of each year, file with the clerk of the municipality which created the board, a detailed statement of the amount of money that will be required to meet its expenses and needs for the ensuing year, and the clerk shall place such statement before the governing body in due course so that it may levy such taxes and make such appropriations as it deems practical to defray the expenses and meet the needs and requirements of the board in the performance of its functions.

(15) ANNUAL REPORTS. A board of harbor commissioners shall make a report annually to the governing body of the municipality which created it, giving an account of its activities and an account of its revenues and expenditures in the preceding calendar year. Such report may contain such other matters as the board deems of interest, including such recommendations as it deems to be for the best interest of the municipality and its harbor, harbor facilities and shipping interests.

History: 1981 c. 238; 1985 a. 29; 1987 a. 27; 1991 a. 39; 1995 a. 130, 225; 1999 a. 150 s. 672; 2001 a. 16.

A fee assessed for revenue purposes, which bears no relation to the costs of maintaining harbor facilities, is a tax that is not authorized under sub. (9). Racine Marina Associates v. City of Racine, 175 Wis. 2d 614, 499 N.W.2d 715 (Ct. App. 1993).

SUBCHAPTER IV

LOWER WISCONSIN STATE RIVERWAY

Cross−reference: See also RB and s. NR 103.04, Wis. adm. code.

30.40 Definitions. In ss. 30.40 to 30.49:

(1) "Agricultural use" means beekeeping; dairying; egg production; feedlots; grazing; floriculture; raising of livestock; raising of poultry; raising of fruits, nuts and berries; raising of grains, grass, mint and seed crops; raising of vegetables; and sod farming.

(1r) "Bluff zone" means land in the riverway in the areas that are 200 feet in width from behind the bluff line to 100 feet below the bluff line.

(2) "Board" means the Lower Wisconsin State Riverway board.

(3) "Boat" has the meaning given in s. 30.50 (2).

(3g) "Forester" means a person who is employed by the department to carry out assigned forest management responsibilities or who has received a bachelor's or higher degree from a school of forestry with curriculum accredited by the society of American foresters in the management of forest resources.

(3r) "High−voltage transmission line" means a conductor of electric energy exceeding one mile in length designed for operation at a nominal voltage of 100 kilovolts or more, together with associated facilities or structures.

(4) "Highway" means a way or thoroughfare, except a waterway, that is used for vehicular travel by the public.

(6) "Mobile home" has the meaning given in s. 101.91 (10).

(7) "Modify" means to renovate, remodel, expand in size or otherwise change a structure that is not damaged or destroyed.

(7m) "Nonmetallic mining" has the meaning given in s. 295.11 (3).

(8) "Pedestrian" has the meaning given in s. 340.01 (43).

(9) "Person" means a natural person, corporation, limited liability company, partnership, association, cooperative, unincorporated cooperative association, municipality or other local governmental unit, private or public utility, municipal power district, estate or trust, the United States, a federal agency, the state of Wisconsin or a state agency.

(10) Notwithstanding s. 30.01 (5), "pier" means a structure extending into the river from the shore with water on both sides.

(10m) "Private drive" means a way in private ownership that is used for vehicular travel upon a single parcel of real property.

(11) "Private road" means a way or thoroughfare in private ownership and used for vehicular travel between 2 or more parcels of real property, not under common ownership, and a highway.

(12) "Public access site" means a site owned by the state or a municipality and that provides public access to the river for boats and for recreational users. "Public access site" includes a structure in conjunction with the site that is necessary for the operation and use by the public of the site.

(12m) "Recreational trail" means an unpaved trail or pathway that is used for recreational purposes and is not necessary for access to the river due to the difficulty of the terrain.

(13) "Refuse" means combustible and noncombustible rubbish, including, but not limited to, ashes, paper, glass, cloth, wood, metal and litter.

(14) "River" means the Wisconsin River downstream from the dam at Prairie du Sac.

(14m) "River edge zone" means land in the riverway in the areas that begin from the point at which tree growth begins at the edge of the river and that extend 75 feet landward from that point.

(15) "Riverway" means the area within the boundaries of the Lower Wisconsin State Riverway.

(16) "Solid waste" has the meaning given in s. 289.01 (33).

(17) "Stairway" means a structure constructed of wood or other material that is necessary due to the steepness of a slope for access to the river.

(18) "Structure" means a building, facility or other unit that is constructed or otherwise erected.

(18m) "Timber" means standing trees which, because of their size, quality and number, are marketable.

(19) "Utility facility" means any pipe, pipeline, duct, wire line, conduit, pole, tower, equipment or other structure used for one of the following:

(a) The transmission or distribution of electrical power or light that is not a high−voltage transmission line.

(b) The transmission, distribution or delivery of heat, water, gas, sewer, telegraph or telecommunication services.

(20) "Visible from the river" means possible to be seen from any point on the river.

(21) "Visually inconspicuous" means difficult to be seen and not readily noticeable from any point on the river during the time when the leaves are on the deciduous trees.

(22) "Walkway" means a paved or unpaved trail or pathway or a structure constructed of wood or other material that is necessary due to the difficulty of the terrain for access to the river.

(22m) "Waterproof container" means a can, bucket, bag, box or other similar receptacle made of a material that retains its usefulness when exposed to water.

(23) Notwithstanding s. 30.01 (8), "wharf" means a structure in the river extending along the shore and generally connected with the uplands throughout its length.

(23m) "Woody vegetation" includes trees that are not timber.

2009−10 Wis. Stats. database updated and current through 2011 Wis. Act 39 and July 25, 2011. Statutory changes effective on or prior to 9−1−11 are printed as if currently in effect. Statutory changes effective after 9−1−11 are designated by NOTES. See Are The Statutes on this Website Official?

Electronic reproduction of 2009−10 Wis. Stats. database, current through 2011 Wis. Act 39 and July 25, 2011.

(24) "Working day" has the meaning given in s. 227.01 (14).

History: 1989 a. 31; 1991 a. 76; 1993 a. 112; 1995 a. 211, 227; 1997 a. 35; 2005 a. 441; 2007 a. 11.

30.41 Creation. (1) There is created a Lower Wisconsin State Riverway consisting of land as designated by the natural resources board.

(2) The department shall publish as an appendix to ch. NR 45, Wis. adm. code, a map and a description of the riverway.

History: 1989 a. 31.

30.42 Departmental duties, powers, prohibitions. (1) The department shall:

(a) Manage the land in the riverway under its ownership, supervision, management or control in conformity with ss. 30.40 to 30.49.

(b) Promote to the recreational users of the riverway an appreciation of the physical characteristics of the riverway and an appreciation of the local history, traditions and culture of the river valley.

(c) Consult with the board and with municipalities located at least in part in or adjacent to the riverway on issues concerning the riverway.

(d) 1. Promulgate rules that are applicable only to land in the riverway to regulate the cutting and harvesting of timber so that the effect of cutting or harvesting of timber on the scenic beauty and the natural value of the riverway is minimized. For land that is in the river edge zone or the bluff zone, the rules promulgated under this paragraph shall require that the cutting and harvesting of timber be solely by selection cutting and that the minimum basal area for the residual stand of timber be 60 square feet per acre. The rules promulgated under this paragraph do not apply to any cutting or harvesting of timber subject to regulation under s. 30.43 (3).

2. For purposes of subd. 1., the department shall, by rule, define "basal area" and "selection cutting".

(e) For each county named in s. 15.445 (3) (b), assign a department employee whose office is in the county to serve as a liaison representative on issues concerning the riverway.

(f) Encourage an owner of land who on August 9, 1989, is subject to a contract under subch. I of ch. 77 or an order designating managed forest land under subch. VI of ch. 77 to voluntarily modify the contract or amend the order to require compliance with the rules regulating timber cutting and harvesting promulgated under par. (d).

(2) The department may:

(a) Acquire land in the riverway under s. 23.09 (2) (d) including easements and rights in land under s. 23.09 (10).

(b) Enter into agreements with other agencies or persons to provide continuing and necessary maintenance, management, protection, husbandry and support for the land in the riverway under the ownership, supervision, management or control of the department.

(3) Notwithstanding s. 227.11, the department may not promulgate rules interpreting or establishing procedures for ss. 30.44 to 30.46 except for the promulgation of rules under sub. (1) (d).

History: 1989 a. 31; 1991 a. 76; 1995 a. 27, 211.

Cross−reference: See also ch. NR 37, Wis. adm. code.

30.43 Board duties. The board shall:

(1) Review applications for permits under s. 30.44 (1) to (5) and issue permits for activities that comply with their applicable performance standards.

(3) Promulgate rules establishing procedures for the cutting or harvesting of timber or the cutting of woody vegetation in order to restore or maintain prairies or other native plant communities, to enhance wildlife habitat or to maintain confirmed archaeological sites. The rules shall require the person proposing the cutting or harvesting to prepare a management plan and obtain approval of the management plan from the department.

History: 1989 a. 31; 1991 a. 76; 1995 a. 211.

30.435 Board powers. The board may:

(1) Grant waivers under s. 30.44 (8) (c) and (f) and impose conditions under s. 30.44 (7).

(2) Issue general permits under s. 30.44 (1) (f).

(2m) Promulgate rules and otherwise act under s. 30.443.

(3) Enter into contracts to carry out its duties and powers under ss. 30.40 to 30.49.

(4) Employ staff outside the classified service in accordance with s. 16.505.

(5) Inform or advise a municipality that has land located outside the riverway as to the impact the development of the land may have on the riverway.

(6) Advise or make a recommendation to a city or village that has land adjacent to the riverway to encourage the city or village to adopt ordinances or other rules or regulations that preserve the scenic value of that land.

(7) Report to the legislature on the effectiveness of ss. 30.44 to 30.49.

(8) Advise the department on any conflict between the recreational use in the riverway and ss. 30.44 (1) to (5), 30.445 and 30.45 to 30.48.

(9) Delegate to its staff the power to:

(a) Issue, grant waivers to and impose conditions on permits, other than general permits.

(b) Enter into contracts.

History: 1989 a. 31; 1991 a. 76; 1995 a. 211.

30.44 Permits and waivers; board procedures. (1) STRUCTURES; MOBILE HOMES. (a) For purposes of this subsection, notwithstanding s. 30.40 (18), "structure" excludes boat shelters, boathouses, bridges, dams, fishing rafts, fixed houseboats, piers, public access sites, stairways, swimming rafts, high−voltage transmission lines, utility facilities, walkways, wharves and any other structures that the board excludes by rule if the structures excluded by rule are of a minimal size or are of a type that is not visible from the river.

(b) A person shall apply for and receive a permit before starting any of the following activities on land in the riverway:

1. Construction of a structure, including clearing or grading the land for the structure.

2. Placement or replacement of a mobile home.

3. Modification of a structure or a mobile home.

4. Repair of a damaged structure or reconstruction of a destroyed structure unless exempt under par. (g).

5. Repair of a mobile home unless exempt under par. (g).

(c) A person may not be issued a permit for an activity in par. (b) on land that is visible from the river and that is in the riverway unless all of the following performance standards are met:

1. Sufficient vegetation exists on the land to allow the structure or mobile home to be visually inconspicuous.

2. The structure or mobile home shall not be higher than the surrounding vegetation during the time when the leaves are on the deciduous trees.

3. Visual impact shall be minimized by the use of exterior colors that harmonize with the natural surroundings during the time when the leaves are on the deciduous trees and by the limited use of glass or other reflective materials, except that a structure that is for agricultural use may be painted in a traditional manner in red or white.

4. The natural slope of the land shall be 20% or less.

4m. The person being issued the permit will comply with any applicable standards that the board imposes under s. 30.443 (2).

Electronic reproduction of 2009−10 Wis. Stats. database, current through 2011 Wis. Act 39 and July 25, 2011.

(d) A person may not be issued a permit for an activity in par. (b) on land that is not visible from the river and that is in the riverway unless the performance standard in par. (e) is met.

(e) The height of the structure or mobile home shall not result in its being visible from the river.

(f) For land in the riverway that is not visible from the river, the board may issue a general permit for an activity in par. (b) that is applicable to a designated area of the riverway instead of requiring applications for individual permits for the activity under par. (b). A person engaging in an activity in par. (b) in an area for which a general permit has been issued for the activity shall comply with the performance standard in par. (e).

(g) Paragraphs (b) to (f) do not apply to the repair of a damaged structure or mobile home or to the reconstruction of a destroyed structure if all of the following apply:

1. No municipal ordinance or other municipal regulation prohibits the repair or reconstruction.

2. The repaired mobile home or the repaired or reconstructed structure will not be larger in size or more visible from the river than it was immediately before it was damaged or destroyed.

(2) WALKWAYS; STAIRWAYS. (a) A person shall apply for and receive a permit before starting any of the following activities on land in the riverway:

1. Construction of a stairway or walkway.

2. Modification of a stairway or walkway.

3. Repair of a damaged stairway or walkway or reconstruction of a destroyed stairway or walkway unless exempt under par. (c).

(b) A person may not be issued a permit for an activity in par. (a) unless the following performance standards are met:

1. The walkway or stairway shall be visually inconspicuous.

2. The walkway or stairway shall have sufficient safeguards to minimize erosion.

3. The walkway or stairway shall be for pedestrians only.

(c) Paragraphs (a) and (b) do not apply to the repair of a damaged stairway or walkway or to the reconstruction of a destroyed stairway or walkway if all of the following apply:

1. No municipal ordinance or other municipal regulation prohibits the repair or reconstruction.

2. The repaired or reconstructed stairway or walkway will not be larger in size or more visible from the river than it was immediately before it was damaged or destroyed.

4. The repaired or reconstructed stairway or walkway shall be for pedestrians only.

(3) FORESTRY. (a) A person shall apply for and receive a permit before cutting or harvesting timber on land in the riverway.

(b) A person may not be issued a permit for an activity in par. (a) unless the performance standard in par. (bn) is met.

(bn) The cutting and harvesting of timber shall comply with the rules regulating timber cutting and harvesting promulgated by the department under s. 30.42 (1) (d) or by the board under s. 30.43 (3).

(c) This subsection does not apply to the following:

1. Timber subject to a contract under subch. I of ch. 77 that is in effect on October 31, 1989, except as provided in s. 77.17.

2. Timber subject to an order designating managed forest land under subch. VI of ch. 77 that is in effect on October 31, 1989, except as provided in s. 77.82 (11m).

2m. The cutting of timber that is necessary for maintenance of an easement or a right−of−way for a highway, a railroad, a high−voltage transmission line or a utility facility.

2n. The cutting of timber that is necessary for the construction, reconstruction, modification, repair or maintenance of a recreational trail.

2p. The cutting of timber that is necessary for maintenance of the right−of−way for a private drive or a private road if the width of the area subject to cutting does not exceed the minimum width necessary for safe travel, but not to exceed 20 feet for a private drive or 30 feet for a private road.

2r. Diseased timber if a forester has issued a written determination that the timber is subject to an actual, potential or incipient infestation or infection by an insect or disease that is harmful to the timber.

3. Timber damaged by natural causes.

4. Timber cut on land that is more than 75 feet beyond the high−water mark of the river and that is owned or occupied by a person if the cut timber is used as firewood, fence posts or Christmas trees for agricultural or household use and if the cut timber is not sold or bartered to another person.

5. Timber cut pursuant to a written contract between private parties that is entered into before October 31, 1989, if a copy of the contract has been filed with the board before the next cutting that occurs after December 6, 1991, together with an affidavit on a form supplied by the board. The affidavit shall state that the contract was entered before October 31, 1989, and shall inform the person filing the contract and affidavit of the penalty for false swearing under s. 946.32.

(3e) NONMETALLIC MINING. (a) A person shall apply for and receive a permit before beginning or expanding nonmetallic mining on land in the riverway that is not visible from the river when the leaves are on the deciduous trees.

(b) A person may not be issued a permit for an activity in par. (a) unless the following performance standards are met:

1. Any structure and any stockpiled minerals or soil associated with the nonmetallic mining activity may not be visible from the river when the leaves are on the deciduous trees.

2. The excavation for the nonmetallic mining activity may not be visible from the river when the leaves are on the deciduous trees.

(3m) UTILITY FACILITIES; HIGH−VOLTAGE TRANSMISSION LINES. (a) A person shall apply to and receive a permit from the board before constructing, modifying or relocating a utility facility or high−voltage transmission line that is in the riverway.

(b) A person may not be issued a permit for an activity in par. (a) unless the performance standard in par. (c) is met and, for a high−voltage transmission line, the board finds that the activity will not impair, to the extent practicable, the scenic beauty or natural value of the riverway.

(c) All reasonable efforts, as determined by the board, shall be taken to minimize the visual impact of the utility facility.

(d) The use of an aboveground utility facility shall not be a basis for the board to determine that all reasonable efforts will not be taken to minimize the visual impact. The board may not require a high−voltage transmission line to be placed underground in order to make the finding specified in par. (b).

(4) PUBLIC ACCESS SITES. (a) A person shall apply for and receive a permit before starting any of the following activities on land in the riverway:

1. Construction or modification of a public access site.

2. Repair of a damaged public access site or reconstruction of a destroyed public access site unless exempt under par. (d).

(b) A person may not be issued a permit for an activity in par. (a) unless the performance standard in par. (c) is met.

(c) All reasonable efforts, as determined by the board, shall be taken to minimize the visual impact of the public access site, including the use of exterior colors that harmonize with the surroundings and the limited use of glass or other reflective materials.

(d) Paragraphs (a) to (c) do not apply to the repair of a damaged public access site or to the reconstruction of a destroyed public access site if all of the following apply:

1. No municipal ordinance or other municipal regulation prohibits the repair or reconstruction.

2. The repaired or reconstructed public access site will not be larger in size or more visible from the river than it was immediately before it was damaged or destroyed.

2009−10 Wis. Stats. database updated and current through 2011 Wis. Act 39 and July 25, 2011. Statutory changes effective on or prior to 9−1−11 are printed as if currently in effect. Statutory changes effective after 9−1−11 are designated by NOTES. See Are The Statutes on this Website Official?

Electronic reproduction of 2009−10 Wis. Stats. database, current through 2011 Wis. Act 39 and July 25, 2011.

(5) BRIDGES. (a) A person shall apply for and receive a permit before starting any of the following activities on land in the riverway:

1. Construction, modification or reconstruction of a bridge.

2. Repair of a bridge unless exempt under par. (d).

(b) A person may not be issued a permit for an activity in par. (a) unless the performance standard in par. (c) is met.

(c) Visual impact shall be minimized by the use of exterior colors that harmonize with the surroundings and by the limited use of glass or other reflective materials.

(d) Paragraphs (a) and (b) do not apply to the repair of a bridge in the riverway if all of the following are applicable:

1. No municipal ordinance or other municipal regulation prohibits the repair.

2. The repaired bridge will not be larger in size or more visible from the river than it was immediately before it was damaged.

(7) CONDITIONS ON PERMITS. The board may impose on a permit a condition that is necessary to assure compliance with the performance standards in subs. (1) to (5) or to assure that the activity is completed within a reasonable time.

(8) BOARD PROCEDURE. (a) Except as provided under sub. (1) (f), a person shall apply for and be issued by the board a permit for an activity in subs. (1) to (5) for land in the riverway.

(b) The board may not issue a permit under par. (a) if the performance standards for the activity are not met.

(c) The board may grant a waiver of a performance standard for an activity in sub. (1) (b) and issue a permit under par. (a) or may grant a waiver authorizing an activity prohibited under s. 30.45 (3) or (3m) for land in the riverway if one of the following applies:

1. A municipality requests the waiver that is necessary for municipal purposes.

2. An individual requests the waiver, enforcement of the performance standard or prohibition will cause unnecessary hardship to the individual and the visual impact of the activity will be minimized to the greatest degree possible.

(d) For purposes of par. (c) 2., unnecessary hardship must be:

1. Compelling personal needs of the individual that are not self−imposed or self−created and that are not solely based on the financial hardship of the individual; or

2. Natural causes beyond the control of the individual.

(e) The board may not grant a waiver under par. (c) 2. for unnecessary hardship due to natural causes beyond the control of the individual if the reason for granting the waiver is based solely on the financial hardship of the individual.

(f) 1. The board may grant a waiver to modify a limitation for a wharf in the riverway, as specified under s. 30.45 (9) (a), if an individual requests the waiver, if enforcement of the limitation will cause unnecessary hardship to the individual and if the visual impact of the wharf will be minimized to the greatest degree possible.

2. For purposes of subd. 1., unnecessary hardship must be compelling personal needs of the individual that are not self−imposed or self−created and that are not solely based on the financial hardship of the individual.

(10) REVOCATION OF PERMIT. (a) The board shall revoke a permit issued under sub. (8) or s. 30.44 (9), 1993 stats., if a person fails to comply with the performance standards for the permit that are not waived under sub. (8) (c) or s. 30.44 (9) (c), 1993 stats.

(b) The board shall revoke a general permit issued under sub. (1) (f) if it finds the performance standard under sub. (1) (e) is not being met in the designated area.

History: 1989 a. 31; 1991 a. 76, 189; 1995 a. 201, 211; 1997 a. 35, 204.
Cross−reference: See also chs. NR 37 and RB 2, Wis. adm. code.

30.443 Erosion prevention and control. (1) For activities under s. 30.44 (1) (b), the board may do any of the following:

(a) Promulgate rules establishing standards for erosion prevention or control at sites in the riverway that are not subject to the standards established under s. 101.1206 (1) or 101.653 (2) and that have a natural slope of 20% or less.

(b) Promulgate rules establishing standards for erosion prevention or control that are in addition to standards established under ss. 101.1206 (1) and 101.653 (2) for sites in the riverway that are subject to those standards and that have a natural slope of 12% or more but 20% or less.

(2) The board may impose any of the applicable standards established under sub. (1) (a) or (b) or ss. 101.1206 (1) or 101.653 (2) as a condition for receiving a permit under s. 30.44 (1), and the board may promulgate rules to enforce these standards in the riverway.

History: 1995 a. 211; 2009 a. 28; 2011 a. 32.

30.445 Piers. (1) No person may construct, relocate or modify a pier or reconstruct a destroyed pier in the riverway.

(2) No person may have or maintain a pier in the riverway after November 30, 1990, unless the board has issued a permit for the pier under sub. (3) and the board has not revoked the permit under sub. (6).

(3) Any person who owns a pier in the riverway that was in existence on October 31, 1989, may, before September 1, 1990, apply for a permit from the board to have and maintain the pier. Upon application the board shall issue the permit.

(3m) (a) Notwithstanding subs. (2), (3) and (7), the board shall issue a permit to have and maintain a pier in the riverway to an owner of a pier in the riverway that was in existence on October 31, 1989, if the person applies for the permit before September 1, 1992, and if at least a two−thirds majority of the board votes to approve the issuance of the permit.

(b) If an owner fails to apply for a permit under par. (a) before September 1, 1992, or to remove the pier before that date, or if the board fails to approve the permit, the owner shall remove the pier before July 1, 1993.

(4) A permit issued under sub. (3) or (3m) authorizes the person to whom the permit is issued to have and maintain the pier in the riverway on the condition that it be maintained in at least as good condition as it was in on the date of the application for the permit.

(5) A permit issued under sub. (3) or (3m) authorizes repairs to the pier unless any of the following applies:

(a) A municipal ordinance or other municipal regulation prohibits the repair.

(b) The repaired pier will be larger in size or more visible from the river than it was immediately before the damage.

(6) The board shall revoke any permit issued under sub. (3) or (3m) if the owner of the pier does not comply with sub. (4) or (5).

(7) If a person who owns a pier in the riverway that was in existence on October 31, 1989, does not apply for a permit from the board or has not removed the pier before September 1, 1990, the person shall remove the pier by November 30, 1990.

(8) If a permit issued under sub. (3) or (3m) has been revoked, the owner of the pier shall remove the pier within 15 days after the revocation, or if the board grants additional time for the removal, within that time.

(9) Subsections (1) to (8) do not apply to a pier that is not located in the river and that is constructed after December 6, 1991.

History: 1989 a. 31; 1991 a. 76, 189, 315.

30.45 Prohibited and restricted activities in the riverway. In the riverway:

(1) No person may start or engage in an activity under s. 30.44 (1) to (5) or 30.445 without having any permit that is required under s. 30.44 or 30.445.

(1g) No person may cut or harvest timber unless par. (c) applies and either par. (a) or (b) applies:

Electronic reproduction of 2009−10 Wis. Stats. database, current through 2011 Wis. Act 39 and July 25, 2011.

(a) The person has a permit under s. 30.44 (3).

(b) The cutting or harvesting of the timber is exempt under s. 30.44 (3) (c).

(c) The cutting or harvesting complies with any rule promulgated under s. 30.42 (1) (d) which the person must comply with under s. 77.17 or 77.82 (11m).

(1r) No person may construct, modify or relocate a high−voltage transmission line unless it has been approved under s. 30.44 (3m) or 196.491 (3) (d) 3m.

(2) No person may violate a condition imposed under s. 30.44 (7) or under s. 30.44 (11) (d), 1993 stats.

(3) No person may cut woody vegetation below the ordinary high−water mark or within 75 feet beyond the ordinary high−water mark of the river except for the amount necessary for:

(a) One strip 15 feet or less in width for each separately owned parcel of land on the river that is necessary for gaining access to the river.

(ag) An activity for which a permit has been issued under s. 30.44 or 30.445 and has not been revoked under s. 30.44 (10) or 30.445 (6).

(ar) An activity that s. 30.44 or 30.445 exempts from a permit.

(b) Maintenance of an easement or right−of−way for a utility facility.

(bn) Construction, reconstruction, modification, relocation, repair or maintenance of a high−voltage transmission line.

(cg) Construction, modification, reconstruction or repair of a wharf as allowed under sub. (9).

(cr) Maintenance of a structure by a person who complies with any provision of ss. 30.44 to 30.46 and subs. (1), (2) and (4) to (13) that applies to the structure.

(d) Maintenance of a right−of−way for a highway, private road, private drive or a railroad.

(de) Construction, reconstruction, modification or repair of a highway or a railroad.

(df) Construction, reconstruction, modification or repair of a private drive or private road if the width of the area subject to cutting does not exceed the minimum width necessary for safe travel, not to exceed 20 feet for a private drive or 30 feet for a private road.

(dg) Construction, reconstruction, modification, repair or maintenance of a recreational trail.

(dh) Modification, repair or reconstruction of a dam.

(dp) Removal of diseased woody vegetation if a forester has issued a written determination that the woody vegetation is subject to an actual, potential or incipient infestation or infection by an insect or disease that is harmful to the woody vegetation.

(dt) Cutting or harvesting timber if the cutting or harvesting complies with any rule promulgated under s. 30.42 (1) (d) which the landowner must comply with under s. 77.17 or 77.82 (11m).

(e) Removal of woody vegetation damaged by natural causes.

(f) Removal of woody vegetation that poses an imminent hazard to life or property.

(g) Cutting woody vegetation if the cutting complies with the rules promulgated under s. 30.43 (3).

(3m) No person may cut woody vegetation on land that is more than 75 feet beyond the ordinary high−water mark of the river except:

(a) As specified in sub. (3) (a) to (g).

(b) For woody vegetation cut on land owned or occupied by a person if the cut woody vegetation is used as firewood, fence posts or Christmas trees for agricultural or household use and if the cut woody vegetation is not sold or bartered to another person.

(3p) The restrictions against the cutting of woody vegetation under subs. (3) and (3m) do not apply to the cutting of woody vegetation that complies with sound horticultural or arboricultural practices, that does not involve the severing of the woody vegetation from the ground and that does not increase the visibility of any structure from the river.

(4) No person may store or dispose of junk as defined in s. 84.31 (2) (e).

(4m) Except as provided in sub. (4p), no person may store or dispose of solid waste unless the solid waste is:

(a) Nonhazardous sludges from a treatment work, as defined under s. 283.01 (18), that is spread as a soil conditioner or a nutrient on land that is in agricultural use; or

(b) Unmanipulated animal or vegetable manure, as defined in s. 94.64 (1) (t), that is spread as a soil conditioner or a nutrient on land that is in agricultural use.

(4p) No person may dispose of the debris resulting from the demolition of a building or a building foundation unless the disposal is on the same parcel on which the demolition site is located, the debris is of a type that is not required under s. 289.43 (8) (b) 1. to be disposed of in a licensed solid waste disposal facility and the debris is buried.

(5) No person may begin a mining activity or expand a mining activity, except as provided in sub. (5m) or s. 30.44 (3e).

(5m) No person may begin or expand a nonmetallic mining activity on land that is visible from the river when the leaves are on the deciduous trees.

(6) No person may construct, reconstruct or alter a highway or private road unless the highway or private road and any embankments, grading, rock cuts or associated structures are visually inconspicuous and are constructed with sufficient safeguards to prevent erosion.

(6m) No person may construct, reconstruct or alter a recreational trail unless the recreational trail and any embankments, grading and associated structures are visually inconspicuous and are constructed with sufficient safeguards to prevent erosion.

(7) No person may erect a sign that is visible from the river other than:

(a) A sign erected by the department that is necessary for public use of the riverway.

(b) A sign erected by the state or municipality in charge of a highway.

(c) A sign that does not exceed 12 inches high by 12 inches long prohibiting or authorizing entry onto land.

(9) No person may:

(a) Construct or modify a wharf or reconstruct a destroyed wharf unless it will be 20 feet or less in length and 3 feet or less in width and it will not have a railing or other structure extending above its deck.

(b) Repair a damaged wharf unless all of the following apply:

1. No municipal ordinance or other municipal regulation prohibits the repair.

2. The repaired wharf will not be larger in size or more visible from the river than it was immediately before it was damaged.

(10) No person may:

(a) Construct, relocate, replace or reconstruct a boat shelter.

(b) Have or maintain a boat shelter after November 15, 1990.

(13) No person may have or maintain a stairway or walkway unless sufficient safeguards are taken to minimize erosion.

History: 1989 a. 31; 1991 a. 76, 315; 1995 a. 211, 227, 451; 1997 a. 204.

30.452 Prohibited activities in the river. In the river, no person may:

(1) Construct, relocate, replace or reconstruct a swimming raft.

(2) Have or maintain a swimming raft after November 15, 1990.

History: 1991 a. 76, s. 42; Stats. 1991 s. 30.452.

30.455 Department of transportation activities. **(1)** Construction, reconstruction, design, maintenance, modification or repair activities, or nonmetallic mining activities in the riverway, that are carried out under the direction and supervision of the department of transportation are not subject to ss. 30.44 to

Electronic reproduction of 2009−10 Wis. Stats. database, current through 2011 Wis. Act 39 and July 25, 2011.

30.45. At the earliest practical time before the commencement of these activities, the department of transportation shall notify and consult with the department and the board on the location, nature and extent of the proposed work.

(2) (a) The exemption under sub. (1) does not apply unless the standard in par. (b) is met.

(b) To the extent it is economically and technically feasible, the department of transportation shall minimize the visual impact of the activity and any resulting highway or structure.

(c) The department of transportation, in consultation with the department, shall adopt standards to implement par. (b).

(3) If the department determines that there is reasonable cause to believe that an activity being carried out under this section or a resulting highway or structure is not in compliance with the standard in sub. (2) (b), it shall notify the department of transportation. If the secretary and the secretary of transportation are unable to agree upon the methods or time schedules to be used to correct the alleged noncompliance, the secretary, notwithstanding the exemption provided in this section, may proceed with enforcement actions as the secretary considers appropriate.

(4) Except as may be required under s. 1.11, no public notice or hearing is required in connection with any interdepartmental consultation and cooperation under this section.

History: 1989 a. 31; 1991 a. 76, 189; 1995 a. 211.

30.46 Agricultural use. (1) A person may develop or use land in the riverway for agricultural use that is not in agricultural use on October 31, 1989, if:

(a) The development and use comply with the rules for the soil and water resource management program promulgated by the department of agriculture, trade and consumer protection under s. 92.14; and

(b) The person otherwise complies with this subchapter in developing or using the land for agricultural use.

(2) Notwithstanding sub. (1) (b), a person is not required to comply with rules for the soil and water resource management program promulgated under s. 92.14 by the department of agriculture, trade and consumer protection for land in the riverway and that is in agricultural use on October 31, 1989.

(3) Notwithstanding sub. (1) (b), s. 30.44 (1) does not apply to the construction, modification, repair or reconstruction of a structure that is used exclusively for agricultural use on land in the riverway if the land is in agricultural use on October 31, 1989.

History: 1989 a. 31; 1991 a. 189.

30.47 Restrictions on recreational use. (1) No natural person may operate a boat on public waters in the riverway without having an adequately sized waterproof container in the boat in which to place refuse.

(2) No person may leave refuse on land in the riverway owned, managed, supervised or controlled by the department or on public waters in the riverway.

(3) (a) Except as provided in par. (b), no person may have a glass container on land in the riverway owned, managed, supervised or controlled by the department or on islands or public waters in the riverway.

(b) 1. Paragraph (a) does not apply to a natural person or his or her guest having a glass container on land in the riverway that the natural person owns or occupies as a tenant.

2. Paragraph (a) does not apply to a natural person having a glass container on land in the riverway that is also in a state park.

History: 1989 a. 31; 1993 a. 73.

30.48 Applicability. (1) Sections 30.44 to 30.47 are in addition to and are not superseded by any law, rule, ordinance or other regulation governing an activity that occurs in the riverway.

(2) Sections 30.44 to 30.47 do not apply to land that is located in a city or village on October 31, 1989, or to land located within 0.5 mile of the corporate limits of a city or village on October 31, 1989, that is annexed to the city or village after October 31, 1989.

History: 1989 a. 31; 1991 a. 189.

30.49 Enforcement. (1) FORFEITURES. (a) Any person who knowingly violates ss. 30.44 to 30.455 or 30.46 (1) shall forfeit not more than $1,000 for each violation.

(b) Each day that a violation under par. (a) continues is a separate violation.

(c) Any person who violates ss. 30.44 to 30.455 or 30.46 (1) shall forfeit not more than $1,000 for each violation.

(d) Any person who intentionally violates s. 30.47 shall forfeit not more than $500.

(e) Paragraph (b) does not apply to a violation under par. (c) or (d).

(f) 1. For violations under par. (c), if the alleged violator has not previously received a warning notice for a violation of the same statutory provision, the law enforcement officer or warden shall issue the violator a warning notice and may not issue a citation.

2. The warning notice under subd. 1. shall inform the alleged violator of the action the alleged violator is required to take to be in compliance with the applicable statutory provision. If the warning notice requires the alleged violator to remedy the effects of the violation, the alleged violator has 30 days to do so unless subd. 3. applies.

3. The alleged violator may request in writing from the board an extension of time to remedy the effects of the violation. The board for good cause may grant an extension of time.

4. If the alleged violator fails to comply with the warning notice, the law enforcement officer or warden may issue a citation. If the alleged violator complies with the warning notice, the law enforcement officer or warden may not issue a citation.

5. The department shall record the issuances of warning notices for purposes of this paragraph.

(2) CIVIL REMEDIES. (a) The state, board or a municipality may file a civil action to enforce ss. 30.44 to 30.46.

(b) If the plaintiff prevails in a civil action under par. (a), the court may grant:

1. Injunctive relief under ch. 813.

2. A declaratory judgment under s. 806.04.

3. A decree for specific performance for which the court may supervise compliance.

(3) OTHER RIGHTS, REMEDIES. This section does not limit any other right or remedy provided by law.

History: 1989 a. 31.

Cross−reference: See also ch. NR 301, Wis. adm. code.

SUBCHAPTER V

REGULATION OF BOATING

30.50 Definitions. In ss. 30.50 to 30.80:

(1e) "Alcohol beverage" has the meaning specified under s. 125.02 (1).

(1g) "Alcohol concentration" has the meaning given in s. 340.01 (1v).

(1j) "Application" includes the form designated by the department and any supporting document or other information that is submitted to the department.

(1m) "Approved public treatment facility" has the meaning specified under s. 51.45 (2) (c).

(1s) "Associated equipment" means any system, part or component of a boat as originally manufactured or any similar system, part or component manufactured or sold for replacement, repair or improvement of the system, part or component; any accessory or equipment for, or appurtenance to, a boat and any marine safety

Electronic reproduction of 2009−10 Wis. Stats. database, current through 2011 Wis. Act 39 and July 25, 2011.

article, accessory or equipment intended for or used by a person on board a boat except radio equipment.

(2) "Boat" or "vessel" means every description of watercraft used or capable of being used as a means of transportation on water, except a seaplane on the water and a fishing raft.

(3) "Certificate of number" means the certificate of number certificate, certificate of number card, certification decal, and identification number issued by the department under the federally approved numbering system unless the context clearly indicates otherwise.

(3b) "Certification or registration documentation" means a certificate of number certificate, certificate of number card, certification decal, registration certificate, registration card, or registration decal.

(3d) "Commercial motorboat" means a motorboat while it is being operated to transport property or passengers for hire or while it is being used by its operator or owner to earn a livelihood or to gain a profit or both.

(3g) "Controlled substance" has the meaning specified under s. 961.01 (4).

(3h) "Controlled substance analog" has the meaning given in s. 961.01 (4m).

(3r) "Drug" has the meaning specified under s. 450.01 (10).

(4) "Employ" means to make use of for any purpose other than maintenance.

(4b) "Great bodily harm" has the meaning given in s. 939.22 (14).

(4e) "Intoxicant" means any alcohol beverage, controlled substance, controlled substance analog or other drug or any combination thereof.

(4m) "Intoxicated boating law" means s. 30.681 (1) or a local ordinance in conformity with that subsection, s. 30.681 (2) or, if the operation of a motorboat is involved, s. 940.09 or 940.25.

(4q) "Lake sanitary district" means a town sanitary district that has within its boundaries at least 60% of the footage of shoreline of a public inland lake, as defined in s. 60.782 (1), for which a public inland lake protection and rehabilitation district is not in effect.

(4s) "Law enforcement officer" has the meaning specified under s. 165.85 (2) (c) and includes a person appointed as a conservation warden by the department under s. 23.10 (1).

(5) "Manufacturer" means any person engaged in the manufacture, construction or assembly of boats or associated equipment; the manufacture or construction of components for boats and associated equipment to be sold for subsequent assembly and the importation into this state for sale of boats, associated equipment or components for boats.

(6) "Motorboat" means any boat equipped with propulsion machinery, whether or not the machinery is the principal source of propulsion.

(7) "Nonmotorized boat" means a boat which is not a motorboat but which is designed and constructed to be used as a boat for transportation of a person or persons on water. This term includes, but is not limited to, any canoe, sailboat, inflatable boat or similar device, row boat, raft and dinghy which is not a motorboat.

(8) "Operate" or "use" when used with reference to a motorboat, boat or vessel means to navigate or otherwise employ.

(8g) "Operation of a motorboat" means controlling the speed or direction of a motorboat, except a sailboat operating under sail alone.

(8r) "Operator" means a person who is engaged in the operation of a motorboat, who is responsible for the operation of a motorboat or who is supervising the operation of a motorboat.

(9) "Owner" means the person who has lawful possession of a boat by virtue of legal title or equitable interest therein which entitles the person to lawful possession.

(9b) "Patrol boat" means a boat authorized by this state or by a local governmental unit for the purpose of law enforcement, search and rescue, fire fighting, emergency response, or water safety operations, including a water safety patrol unit.

(9d) "Personal watercraft" means a motorboat that uses an inboard motor powering a water jet pump or a caged propeller as its primary source of motive power and that is designed to be operated by a person standing on, kneeling on or sitting astride the watercraft.

(9g) "Purpose of authorized analysis" means for the purpose of determining or obtaining evidence of the presence, quantity or concentration of alcohol or other intoxicant in a person's blood, breath or urine.

(9x) "Refusal law" means s. 30.684 (5) or a local ordinance in conformity with that subsection.

(10) "Registration" means the registration certificate, registration card, and registration decal issued by the department.

(10m) "Restricted controlled substance" means any of the following:

(a) A controlled substance included in schedule I under ch. 961 other than a tetrahydrocannabinol.

(b) A controlled substance analog, as defined in s. 961.01 (4m), of a controlled substance described in par. (a).

(c) Cocaine or any of its metabolites.

(d) Methamphetamine.

(e) Delta−9−tetrahydrocannabinol.

(11) "Sailboard" means a sailboat with a hull resembling a surfboard which has little or no cockpit or seating area and which is designed to be sailed by a person in a standing position.

(12) "Slow−no−wake" means that speed at which a boat moves as slowly as possible while still maintaining steerage control.

(13) "State of principal use" means the state where the boat is used or is to be used most during the year.

(13m) "Test facility" means a test facility or agency prepared to administer tests under s. 343.305 (2).

(14) "Waters of this state" means any waters within the territorial limits of this state, including the Wisconsin portion of boundary waters.

History: 1979 c. 275; 1983 a. 27, 100; 1985 a. 279, 331; 1987 a. 3, 374; 1989 a. 145; 1991 a. 39, 257, 316; 1995 a. 290, 349, 436, 448; 1997 a. 198; 1999 a. 9; 2001 a. 16; 2003 a. 97; 2005 a. 25, 308.

Recreational boating law in Wisconsin. Whipple. 61 MLR 425.

Wisconsin's Boating Rules of the Road. Whipple. Wis. Law. June 2000.

30.501 Capacity plates on boats. (1) Every vessel less than 20 feet in length designed to carry 2 or more persons and to be propelled by machinery as its principal source of power or designed to be propelled by oars shall, if manufactured or offered for sale in this state, have affixed permanently thereto by the manufacturer a capacity plate as required by this section. As used in this section "manufacture" means to construct or assemble a vessel or alter a vessel so as to change its weight capacity.

(2) A capacity plate shall bear the following information permanently marked thereon so as to be clearly visible and legible from the position designed or normally intended to be occupied by the operator of the vessel when under way:

(a) For all vessels designed for or represented by the manufacturer as being suitable for use with outboard motor:

1. The total weight of persons, motor, gear and other articles placed aboard which the vessel is capable of carrying with safety under normal conditions.

2. The recommended number of persons commensurate with the weight capacity of the vessel and the presumed weight in pounds of each such person. In no instance shall such presumed weight per person be less than 150 pounds.

3. Clear notice that the information appearing on the capacity plate is applicable under normal conditions and that the weight of

Electronic reproduction of 2009−10 Wis. Stats. database, current through 2011 Wis. Act 39 and July 25, 2011.

the outboard motor and associated equipment is considered to be part of total weight capacity.

4. The maximum horsepower of the motor the vessel is designed or intended to accommodate.

(b) For all other vessels to which this section applies:

1. The total weight of persons, gear and other articles placed aboard which the vessel is capable of carrying with safety under normal conditions.

2. The recommended number of persons commensurate with the weight capacity of the vessel and the presumed weight in pounds of each such person. In no instance shall such presumed weight per person be less than 150 pounds.

3. Clear notice that the information appearing on the capacity plate is applicable under normal conditions.

(3) The information relating to maximum capacity required to appear on capacity plates by sub. (2) shall be determined in accordance with such methods and formulas as are prescribed by rule promulgated by the department. In prescribing such methods and formulas, the department shall be guided by and give due regard to the necessity for uniformity in methods and formulas lawful for use in determining small vessel capacity in the several states and to any methods and formulas which may be recognized or recommended by the U.S. coast guard.

(4) Any vessel to which this section applies not having a capacity plate, meeting the requirements of law, affixed thereto by the manufacturer thereof may have such affixed by any other person in accordance with such rules as the department promulgates, and may thereafter be offered for sale in this state, but no action taken pursuant to this subsection, or as described herein, shall relieve any manufacturer from liability for failure to comply with this section.

(5) The information appearing on a capacity plate shall be deemed to warrant that the manufacturer, or the person affixing the capacity plate as permitted by sub. (4), has correctly and faithfully employed a method and formula for the calculation of maximum weight capacity prescribed by the department and that the information appearing on the capacity plate with respect to maximum weight capacity and recommended number of persons is the result of applying such method and formula, and with respect to information concerning horsepower limitations that such information is not a deliberate or negligent misrepresentation.

(6) If any vessel required by this section to have a capacity plate affixed thereto is of such design or construction as to make it impracticable or undesirable to affix such plate, the manufacturer, or other person having the responsibility for affixing the plate, may represent such impracticability or undesirability to the department in writing. Upon determination by the department that such representation has merit and that a proper and effective substitute for the capacity plate which will serve the same purpose is feasible, the department may authorize such alternative compliance and such alternative compliance shall thereafter be deemed compliance with the capacity plate requirements of this section.

(7) The department may by rule exempt from the requirements of this section vessels which it finds to be of such unconventional design or construction that the information required on capacity plates would not assist in promoting safety or is not reasonably obtainable.

(8) The department may promulgate rules to carry out the purposes of this section, but rules on vessel capacity requirements shall conform with appropriate federal regulations.

(9) This section applies to vessels manufactured after January 1, 1966 and prior to November 1, 1972. All vessels manufactured after November 1, 1972, shall comply with appropriate federal regulations and the capacity information shall be displayed as required.

History: 1979 c. 275; 1985 a. 332 ss. 44, 251 (1); 1987 a. 403; 1997 a. 198.
Cross−reference: See also s. NR 5.12, Wis. adm. code.

30.505 Certificate of number system to conform to federal system. The certificate of number system and the issuance of identification numbers employed by the department shall be in conformity with the overall system of identification numbering for boats established by the U.S. government. The department shall promulgate rules as are necessary to bring the state certificate of number system and the issuance of identification numbers into conformity with this federal system.

History: 1983 a. 27 s. 858; 1997 a. 198.

30.51 Certificate of number and registration; requirements; exemptions. (1) REQUIREMENTS. (a) *Certificate of number.* No person may operate, and no owner may give permission for the operation of, any boat on the waters of this state unless the boat is covered by a certificate of number issued under this chapter or is exempt from the certificate of number requirements of this chapter.

(b) *Registration.* No person may operate, and no owner may give permission for the operation of, any boat on the waters of this state unless the boat is covered by a registration issued under this chapter or is exempt from the registration requirements of this chapter.

(2) EXEMPTIONS. (a) *Exemptions from both certificate of number and registration requirements.* A boat is exempt from both the certificate of number and the registration requirements of this chapter if it is:

1. A nonmotorized boat which is not a sailboat.

2. A nonmotorized boat which is a sailboat but which either is 12 feet in length or less or is a sailboard.

3. Covered by a valid certificate of number issued under federal law or a federally approved numbering system of another state, with the identification number properly displayed on each side of the forward half, but this exemption does not apply if the boat has been within this state for a period in excess of 60 consecutive days or if this state is the state of principal use of the boat.

3m. Covered by a valid certificate of number issued under a federally approved numbering system under a registration program established by a federally recognized American Indian tribe or band, if all of the following apply:

a. The registration program of the tribe or band is covered by an agreement under s. 23.35.

b. The boat displays the identification number required by the tribe or band on each side of the forward half.

c. The boat has not been, for more than 60 consecutive days, in that portion of this state that is outside the boundaries of the reservation where it is registered.

d. The area of this state that is outside of the reservation where it is registered is not the area in which the boat is used or will be used most during the year.

4. Operated within a period of 60 days after application for a certificate of number has been made and the required fee has been paid, if proof of application is carried on board.

5. From a country other than the United States temporarily using the waters of this state.

6. A military or public boat of the United States, except recreational−type public vessels.

7. A boat whose owner is a state or subdivision of a state, which is used principally for governmental purposes, and which is clearly identifiable.

8. A ship's lifeboat.

9. Present in this state, for a period of not to exceed 10 days, for the express purpose of competing in a race conducted under a permit from a municipality or an authorized agency of the U.S. government.

(b) *Exemption from certificate of number requirements.* A boat is exempt from the certificate of number requirements of this chapter if it is a federally documented vessel.

Electronic reproduction of 2009−10 Wis. Stats. database, current through 2011 Wis. Act 39 and July 25, 2011.

(c) *Exemption from registration requirements.* A boat is exempt from the registration requirements of this chapter if it is:

1. Covered by a certificate of number issued under this chapter.

2. A federally documented vessel which is a commercial fishing boat operated under a license issued under s. 29.519.

3. A federally documented vessel with a home port located outside this state. This exemption does not apply if the boat has been within this state for a period in excess of 60 consecutive days or if this state is the state of principal use of the boat.

4. Operated within 60 days after an application for registration is made and the required fee is paid if proof of the application for registration is carried on board the boat.

History: 1973 c. 302; 1979 c. 275; 1983 a. 27; 1985 a. 279; 1993 a. 405; 1997 a. 198, 248; 2001 a. 16; 2005 a. 288.

The boating registration law does not violate Art. IX, s. 1. State v. Jackman, 60 Wis. 2d 700, 211 N.W.2d 480 (1973).

The state has jurisdiction to enforce this section over tribal members operating motorboats on non−reservation waters. Enforcement does not conflict with members' treaty rights or federal law and is not discriminatory. State v. Big John, 146 Wis. 2d 741, 432 N.W.2d 576 (1988).

30.52 Certificate of number and registration; application; certification and registration period; fees; issuance. (1) ISSUANCE OF CERTIFICATES AND REGISTRATIONS. (a) *Application for certificate of number.* 1. Any person who owns a boat required to be covered by a certificate of number shall apply to the department for a certificate of number.

3. If a boat otherwise subject to the certificate of number requirements of this chapter is covered by a valid certificate of number issued under federal law or the federally approved numbering system of another state and is used in this state in excess of 60 consecutive days or if this state becomes the state of principal use, the owner of the boat shall immediately apply to the department for a certificate of number.

(b) *Application for registration.* 1. Any person who owns a boat required to be registered under this chapter shall apply to the department for registration.

1m. Any person who owns a nonmotorized boat that is exempt from the certificate of number and the registration requirement under s. 30.51 (2) (a) 1. or 2. may apply to the department for registration.

1r. A person applying for registration of a federally documented vessel shall submit as part of the application a photocopy of the front and back of the federal certificate of documentation for the vessel, which must be current at the time of applying for registration.

2. If a federally documented vessel with a home port located outside this state is used in this state in excess of 60 consecutive days or if this state becomes the state of principal use, the owner of the boat shall immediately apply to the department for registration.

(c) *Application for duplicate.* If a certificate of number card, a registration card, a certification decal or registration decal is lost or destroyed the owner of a boat may apply for a duplicate.

(1m) PROCEDURES. (a) *Issuers.* For the issuance of original or duplicate certification or registration documentation and for the transfer or renewal of certification or registration documentation, the department may do any of the following:

1. Directly issue, transfer, or renew the certification or registration documentation with or without using the expedited service under par. (ag) 1.

3. Appoint persons who are not employees of the department as agents of the department to issue, transfer, or renew the certification or registration documentation using the service under par. (ag) 1.

(ag) *Methods of issuance.* 1. For the issuance of original or duplicate certification or registration documentation and for the transfer or renewal of certification or registration documentation, the department may implement a procedure under which the department or an agent appointed under par. (a) 3. accepts applications for certification or registration documentation and issues to each applicant all or some of the items of the certification or registration documentation at the time the applicant submits the application accompanied by the required fees.

2. Under the procedure under subd. 1., the applicant shall receive any remaining items of certification or registration documentation directly from the department at a later date. The items of certification or registration documentation issued at the time of the submittal of the application shall be sufficient to allow the boat for which the application is submitted to be operated in compliance with the registration requirements under this section and ss. 30.51 and 30.523.

(ar) *Supplemental fees.* In addition to the applicable fee under sub. (3), the department or the agent appointed under par. (a) 3. shall collect an expedited service fee of $5 each time the expedited service under par. (ag) is provided. The agent shall remit to the department $1 of each expedited service fee the agent collects.

(e) *Receipt of fees.* All fees remitted to or collected by the department under par. (ar) shall be credited to the appropriation account under s. 20.370 (9) (hu).

(f) *Inapplicability.* 1. A dealer in boats who assists a customer in applying for a certification of number or registration without using the procedure specified in par. (ag) 1., may charge the customer a reasonable fee for providing this assistance.

2. Paragraphs (a) to (ar) do not apply to certificates of numbers issued to manufactures or dealers in boats who pay the fee under sub. (3) (im).

(1r) RULES FOR ISSUERS. The department may promulgate rules to establish eligibility and other criteria for the appointment of agents under sub. (1m) (a) 3. and to regulate the activities of these agents.

(2) CERTIFICATION AND REGISTRATION PERIOD. Except as provided in sub. (3g), the certification and registration period runs for 3 years, commencing on April 1 of the year in which the certificate of number or registration is issued and, unless sooner terminated or discontinued in accordance with this chapter, expiring on March 31 of the 3rd year after issuance. A certificate of number or registration is valid only for the period for which it is issued.

(3) FEES. (a) *Payment of fee required.* Except as provided in sub. (3g), a person who applies for the issuance or renewal of a certificate of number or registration shall pay the department the fee required under this subsection for the whole or any part of a certification and registration period.

(b) *Fee for boats under 16 feet.* The fee for the issuance or renewal of a certificate of number for a boat less than 16 feet in length is $22.

(c) *Fee for boats 16 feet or more but less than 26 feet.* The fee for the issuance or renewal of a certificate of number for a boat 16 feet or more but less than 26 feet in length is $32.

(d) *Fee for boats 26 feet or more but less than 40 feet.* The fee for the issuance or renewal of a certificate of number for a boat 26 feet or more but less than 40 feet in length is $60.

(e) *Fee for boats 40 feet or longer.* The fee for the issuance or renewal of a certificate of number for a boat 40 feet or more in length is $100.

(f) *Fee for nonmotorized sailboats.* Notwithstanding pars. (b) to (e), the fee for the issuance or renewal of a certificate of number for a sailboat which is not a motorboat is $17.

(fm) *Fee for voluntarily registered boats.* Notwithstanding pars. (b) to (f), the fee for issuance or renewal of registration for a boat registered pursuant to sub. (1) (b) 1m. is $11.

(g) *Fee for documented vessels.* The fee for the issuance or renewal of registration for a federally documented vessel is the same as the fee for the issuance or renewal for a certificate of number under pars. (b) to (e).

(h) *Fee for issuance upon transfer of ownership.* Notwithstanding pars. (b) to (g), the fee for the issuance of a certificate of

Electronic reproduction of 2009−10 Wis. Stats. database, current through 2011 Wis. Act 39 and July 25, 2011.

number or registration to the new owner upon transfer of ownership of a boat certified or registered under this chapter by the previous owner is $3.75 if the certificate of number or registration is issued for the remainder of the certification and registration period for which the previous certificate of number or registration was issued.

(i) *Fleet fees.* A person owning or holding 3 or more boats may, at the person's option, pay a fleet rate for these boats instead of the fees which otherwise would be payable under pars. (b) to (g). Notwithstanding pars. (b) to (g), the fee for the issuance or renewal of certificates of number or registrations for boats under the fleet rate is $27 plus 50% of the fees which would otherwise be applicable for the boats under pars. (b) to (g).

(im) *Dealer or manufacturer fees.* A manufacturer or dealer in boats may, at the manufacturer's or dealer's option, pay a fee of $75 for the issuance or renewal of a certificate of number.

(j) *Fee for issuance of duplicates.* The fee for the issuance of each duplicate certificate of number card, registration card, certification decal, or registration decal is $2.50.

(3g) EXEMPTION. (a) A boat that is present in this state and used exclusively as part of an advertisement being made for the manufacturer of the boat shall be issued a certificate of number for a period not to exceed 15 days. The department may not charge a fee for the issuance of a certificate of number under this paragraph.

(b) The department shall promulgate rules for the issuance of certificates of number under par. (a).

(3m) VOLUNTARY CONTRIBUTIONS; INVASIVE SPECIES GRANTS. (a) Any applicant for the issuance or renewal of a certificate of number or registration under sub. (3) (b) to (im) may, in addition to paying the fee charged for the certificate, elect to make a voluntary contribution of at least $2 to be used for research by the department concerning invasive species that are aquatic species and for grants under s. 23.22 (2) (c) to control invasive species that are aquatic species.

(am) If a person appointed under sub. (1m) (a) 3. collects a voluntary contribution under par. (a) from an applicant for the issuance or renewal of a certificate of number or registration, the person collecting the voluntary contribution may retain 50 cents of the voluntary contribution to compensate for the person's services in collecting the voluntary contribution.

(b) All moneys collected under par. (a), less the amount retained as authorized under par. (am), shall be deposited into the account under s. 20.370 (3) (is).

(4) SALES AND USE TAXES. The department shall collect from the applicant any sales and use taxes due under s. 77.61 (1) on any boat for which a certificate of number or registration is applied for and the report in respect to those taxes. The department shall use collection and accounting methods approved by the department of revenue.

(5) ISSUANCE. (a) *Certificate of number; card; decals; number.* 1. Upon receipt of a proper application for the issuance or renewal of a certificate of number accompanied by the required fee, a sales tax report, the payment of any sales and use tax due under s. 77.61 (1), and any other information the department determines to be necessary, the department or an agent appointed under sub. (1m) (a) 3. shall issue to the applicant a certificate of number card. The certificate of number card shall state the identification number awarded, the name and address of the owner, and other information the department determines to be necessary. The certificate of number card shall be of pocket size and of durable water resistant material.

2. The department or an agent appointed under sub. (1m) (a) 3. shall issue 2 certification decals per boat for each application that involves the issuance of certification decals. The certification decals shall bear the year of expiration of the current certification and registration period. The department shall provide the applicant with instructions concerning the attachment of the certification decals to the boat.

3. At the time the department or an agent appointed under sub. (1m) (a) 3. issues a certificate of number card, the department or agent shall award an identification number and shall provide the applicant with instructions concerning the painting or attachment of the awarded identification number to the boat. The identification number shall be awarded to a particular boat unless the owner of the boat is a manufacturer of or dealer in boats, motors, or trailers who has paid the fee under sub. (3) (im) and the identification number is used on that boat.

4. At the time a person receives the certification decals, the person shall be furnished with a copy of the state laws pertaining to operation of boats or informational material based on these laws.

(b) *Registration; card; decals.* 1. Upon receipt of a proper application for the issuance or renewal of a registration accompanied by the required fee, a sales tax report, the payment of any sales and use tax due under s. 77.61 (1) and any other information the department determines to be necessary, the department or an agent appointed under sub. (1m) (a) 3. shall issue to the applicant a registration card. The registration card shall state the name and address of the owner and other information the department determines to be necessary. The registration card shall be of pocket size and of durable water resistant material.

1m. The issuance or renewal of a registration card for a boat registered pursuant to sub. (1) (b) 1m. does not authorize the use of a motor on the boat.

2. The department or an agent appointed under sub. (1m) (a) 3. shall issue 2 registration decals per boat for each application that involves the issuance of registration decals. The registration decals shall bear the year of expiration of the current certification and registration period. The department shall provide the applicant with instructions concerning the attachment of the registration decals to the boat.

3. At the time a person receives registration decals, the person shall be furnished with a copy of the state laws pertaining to the operation of boats or informational material based on these laws.

(bn) *Sales tax information required.* 1. For an application submitted under par. (a) 1. or (b) 1., the purchaser of the boat shall complete the sales tax information required by the department on the application unless subd. 2. applies.

2. For an application submitted under par. (a) 1. or (b) 1., if the seller is a manufacturer or a dealer, the manufacturer or dealer shall complete the sales tax information if the manufacturer or dealer agrees to do so on behalf of the purchaser.

History: 1971 c. 215; 1973 c. 302; 1977 c. 29, 418; 1979 c. 34, 221, 275; 1983 a. 27 ss. 847 to 862; 1983 a. 192, 405; 1987 a. 290; 1991 a. 39; 1995 a. 27; 1997 a. 27, 198; 1999 a. 9; 2001 a. 16, 104; 2005 a. 25, 481; 2007 a. 20; 2009 a. 28.

30.523 Certification or registration card to be on board; display of decals and identification number. **(1)** CARD TO BE ON BOARD; EXCEPTION. (a) *Certificate of number card.* If a boat is required to be covered by a certificate of number issued under this chapter and if the owner of the boat has received the certificate of number card for the boat, any person operating the boat shall have the card available at all times for inspection on the boat, unless the department determines the boat is of the use, size, or type as to make the retention of the card on the boat impractical.

(b) *Registration card.* If a boat is required to be covered by a registration issued under this chapter and the owner of the boat has received the registration card for the boat, any person operating the boat shall have the card available at all times for inspection on the boat unless the department determines the boat is of the use, size, or type as to make the retention of the card on the boat impractical.

(2) DISPLAY OF DECALS. (a) *Certification decals.* Upon being issued certification decals, the owner of the boat shall attach or affix the decals to each side of the forward half of the boat in the manner prescribed by rules promulgated by the department. The owner shall maintain the decals in a legible condition at all times.

Electronic reproduction of 2009−10 Wis. Stats. database, current through 2011 Wis. Act 39 and July 25, 2011.

(b) *Registration decals.* Upon being issued registration decals, the owner of the boat shall attach or affix the decals in the manner prescribed by rules promulgated by the department. The owner shall attach or affix the registration decals to the transom of the boat on each side of the federally documented name of the vessel in a manner so both decals are visible. The owner shall maintain the decals in a legible condition at all times.

(c) *Decals for boats owned by manufacturers and dealers.* Notwithstanding par. (a), a manufacturer or dealer in boats, motors, or trailers who has paid the fee under s. 30.52 (3) (im) may attach or affix the certification decals to removable signs to be temporarily but firmly mounted upon or attached to the boat while the boat is being operated.

(d) *Restriction on other stickers and decals.* No stickers or decals other than the certificate of number decals, other stickers or decals that may be provided by the department, and stickers or decals authorized by reciprocity may be attached, affixed, or displayed on either side of the forward half of a boat.

(3) DISPLAY OF IDENTIFICATION NUMBER. Upon being issued a certificate of number card and awarded an identification number, the owner of the boat shall paint on or attach the identification number to each side of the forward half of the boat in the manner prescribed by rules promulgated by the department. The owner shall paint or attach the identification number so it is clearly visible and shall maintain the identification number in a legible condition at all times. A manufacturer or dealer in boats, motors or trailers who has paid the fee under s. 30.52 (3) (im) may paint the identification number on or attach the identification number to removable signs to be temporarily but firmly mounted upon or attached to the boat while being operated. No number other than the identification number awarded by the department or granted reciprocity under this chapter may be painted, attached or otherwise displayed on either side of the forward half of a boat.

History: 1973 c. 302; 1979 c. 275; 1983 a. 27; 1987 a. 397 s. 3; Stats. 1987 s. 30.523; 1997 a. 198; 2001 a. 16.

Cross−reference: See also ss. NR 5.001, 5.01, 5.02, 5.04, 5.05, 5.06, and 19.01, Wis. adm. code.

30.525 Voluntary contributions for nonmotorized boats. The department shall encourage owners of boats which are exempt from the certificate of number requirement under s. 30.51 (2) (a) 1. or 2. to contribute funds to be utilized for the development or enhancement of programs or services which provide benefits relating directly to nonmotorized boating activities. The department shall make reasonable efforts to publicize the nonmotorized boat voluntary contribution program and the purposes for which these revenues are to be utilized.

History: 1983 a. 27.

30.53 Certificate of origin; requirements; contents. (1) REQUIREMENTS. No manufacturer, importer, dealer or other person may sell or otherwise dispose of a new boat to a dealer, to be used by the dealer for purposes of display and resale, without delivering to the dealer a manufacturer's or importer's certificate of origin executed in accordance with this section and with those assignments on the certificate as are necessary to show title in the purchaser of the boat. No dealer may purchase or acquire a new boat without obtaining from the seller of the boat the manufacturer's or importer's certificate of origin.

(2) CONTENTS. A manufacturer's or importer's certificate of origin of a boat shall contain, in the form and together with the information the secretary requires, the following information:

(a) A description of the boat, including, if applicable, the make, year, length, series or model, hull type and hull identification number of the boat and, for a boat with an inboard motor, the make of the engine and the engine serial number.

(b) Certification of the date of transfer of the boat to a distributor, dealer or other transferee, and the name and address of the transferee.

(c) Certification that this transaction is the first transfer of the new boat in ordinary trade and commerce.

(d) The signature and address of a representative of the transferor.

(3) ASSIGNMENT. An assignment of a manufacturer's or importer's certificate of origin shall be printed on the reverse side of the manufacturer's or importer's certificate of origin in the form prescribed by the secretary. The assignment form shall include the name and address of the transferee, a certification that the boat is new and a warranty that the title at the time of delivery is subject only to the liens and encumbrances that are set forth and described in full in the assignment. Nothing in this subsection requires the transferee to apply for a certificate of title under s. 30.533.

(4) NONAPPLICABILITY. Subsection (3) does not apply to or affect:

(a) A lien given by statute or rule of law to a supplier of services or materials for the boat.

(b) A lien given by statute to the United States, this state or any political subdivision of this state.

(c) A security interest in a boat created by a manufacturer or dealer who holds the boat for sale, which shall be governed by the applicable provisions of ch. 409.

History: 1987 a. 397.

30.531 Certificate of title; requirements; exemptions. (1) CERTIFICATE. The owner of a boat subject to registration or certificate of number requirements in this state, whether or not the boat is operated on the waters of this state, shall make application for certificate of title for the boat under the following circumstances:

(a) If the owner has newly acquired the boat, he or she shall make application under s. 30.533.

(b) If the owner applies for registration of a boat without holding a valid certificate of title previously issued to that owner by the department for the boat, he or she shall at the same time apply for a certificate of title.

(2) PREREQUISITE TO REGISTRATION. Except as provided in sub. (3), an applicant's eligibility for a certificate of title is a prerequisite to registration of the boat. If the applicant for registration holds a valid certificate of title previously issued to the applicant by the department for the boat, that is prima facie evidence of ownership of the boat and the applicant need not apply for a new certificate of title when applying for registration.

(3) EXEMPTION. (a) *Boats exempt from registration requirements.* A boat is exempt from both the certificate of origin and certificate of title requirements of this chapter if it is exempt under s. 30.51 (2) (a) from the certificate of number and registration requirements or exempt under s. 30.51 (2) (b) from the certificate of number requirements of this chapter.

(b) *Boats under 16 feet.* A boat is exempt from both the certificate of origin and certificate of title requirements of this chapter if it is less than 16 feet in length.

(bn) *Boats voluntarily registered.* A boat issued a registration card pursuant to s. 30.52 (1) (b) 1m. is exempt from both the certificate of origin and certificate of title requirements of this chapter.

(c) *Boats purchased by nonresidents.* A nonresident who purchases a boat in this state and who intends to title and register the boat in another state is not required to apply for a certificate of title under this chapter. A nonresident who purchases a boat in this state may apply for a certificate of title under this chapter.

History: 1987 a. 397; 1991 a. 39, 269; 1997 a. 198.

30.533 Application for certificate of title; hull and engine identification numbers. (1) CERTIFICATE; CONTENTS. An application for a certificate of title shall be made to the department and shall be accompanied by the required fee. Each application for certificate of title shall contain the following information:

(a) The name and address of the owner.

(b) The name and address of the previous owner.

(c) A description of the boat, including, if applicable, the make, year, length, series or model, hull type and hull identifica-

Electronic reproduction of 2009−10 Wis. Stats. database, current through 2011 Wis. Act 39 and July 25, 2011.

tion number of the boat, the make of the engine and the engine serial number for a boat with an inboard motor, and any other information which the department may reasonably require for proper identification of the boat.

(d) If the boat is a new boat being registered for the first time, the signature of a dealer authorized to sell such new boat and the manufacturer's certificate of origin. Such certificate of origin shall contain such information as is prescribed by the department.

(e) If the boat is a used boat which was last previously registered in another jurisdiction, the applicant shall furnish any certificate of ownership issued by the other jurisdiction and a statement pertaining to the title history and ownership of the boat, such statement to be in the form the department prescribes.

(f) If the boat is a used boat which was last previously registered or titled in this state, or both, the applicant shall furnish any certificate of number or other evidence of registration and any certificate of title previously issued by this state and a statement pertaining to the title history and ownership of the boat, such statement to be in the form the department prescribes.

(g) A signed statement by the applicant that the applicant has inspected the hull identification number and the engine serial number, if any, to ensure that such numbers conform with the numbers recorded on the application for a certificate of title.

(h) Any further evidence of ownership which may reasonably be required by the department to enable it to determine whether the owner is entitled to a certificate of title.

(2) HULL IDENTIFICATION NUMBER. If the boat contains a permanent hull identification number placed on the boat by the manufacturer of the boat, this number shall be used as the hull identification number. If there is no manufacturer's hull identification number, or if the manufacturer's hull identification number has been removed, obliterated or altered, the application for certificate of title shall so state and the secretary shall assign a hull identification number to the boat. The assigned hull identification number shall be permanently affixed to, or imprinted on, the starboard side of the transom of the boat to which the hull identification number is assigned.

(3) ENGINE SERIAL NUMBER. If the boat has an inboard motor which contains an engine serial number, this number shall be recorded on the certificate of title as the engine serial number. If the boat has an inboard motor which does not contain an engine serial number, or if the engine serial number has been removed, obliterated or altered, the application for certificate of title shall so state and the certificate of title shall not contain an engine serial number.

History: 1987 a. 397; 1989 a. 128; 1997 a. 198.

30.535 Department to examine records. Before issuing a certificate of title for a boat, the department shall check the application against the records of stolen boats in the national crime information center.

History: 1987 a. 397.

30.537 Certificate of title; issuance, records, fees. (1) ISSUANCE. The department shall file each application for certificate of title received by it and, when satisfied as to its genuineness and regularity and that the applicant is entitled to the issuance of a certificate of title, shall issue and deliver a certificate to the owner of the boat.

(2) RECORDS. The department shall file and retain for at least 5 years a record of all applications for certificate of title, including, if applicable, the manufacturer's certificate of origin, and all certificates of title issued by it:

(a) According to title number.

(b) According to hull identification number or engine serial number or both.

(c) Alphabetically, according to name of owner.

(d) In any other manner which the department determines to be desirable.

(3) SEARCH FEE. The department shall conduct a title search upon the request of an applicant for a certificate of title and shall charge a fee of $5 for each search.

(4) TITLE FEES. The department shall require that:

(a) The owner of the boat pay a $5 fee to file an application for the first certificate of title.

(b) The owner of the boat pay a $5 fee for a certificate of title after a transfer.

(c) The owner of the boat pay a $5 fee for a replacement certificate of title.

(d) The owner of a boat pay a single $5 fee for the original notation and subsequent release of a security interest on a certificate of title.

(e) A person who has perfected a security interest and who is notified under s. 30.571 pay a $2 fee for each notification.

(f) An assignee of a security interest pay a $2 fee to be named a secured party on a certificate of title.

(5) FEE RESTRICTION. The department shall not charge any fee for services under this section except as specified in subs. (3) and (4).

History: 1987 a. 397; 1989 a. 128; 1991 a. 39.

30.539 Contents of certificate of title. (1) INFORMATION. Each certificate of title issued by the department shall contain:

(a) The name and address of the owner.

(b) The title number assigned to the boat.

(c) A description of the boat, including, if applicable, the make, year, length, series or model, hull type and hull identification number of the boat and, for a boat with an inboard motor, the make of the engine and the engine serial number.

(d) Any other data which the department deems pertinent and desirable.

(2) FORMS. The certificate of title shall contain forms for assignment and warranty of title by the owner, and for assignment and warranty of title by a dealer, or insurance company, and may contain forms for applying for a certificate of title by a transferee.

History: 1987 a. 397; 1997 a. 198.

30.54 Lost, stolen or mutilated certificates. (1) If a certificate of title is lost, stolen, mutilated or destroyed or becomes illegible, the owner or legal representative of the owner named in the certificate, as shown by the records of the department, shall promptly make application for and may obtain a replacement upon furnishing information satisfactory to the department. The replacement certificate of title shall contain the legend "This is a replacement certificate and may be subject to the rights of a person under the original certificate".

(2) If a person applies for a replacement certificate under sub. (1), conservation wardens or local law enforcement officials, after presenting appropriate credentials to the owner or legal representative of the owner named in the certificate of title, shall inspect the boat's engine serial number or hull identification number, for purposes of verification or enforcement.

(3) The department shall not issue a new certificate of title to a transferee upon application made on a replacement until 15 days after receipt of the application.

(4) A person recovering an original certificate of title for which a replacement has been issued shall promptly surrender the original certificate to the department.

History: 1987 a. 397.

30.541 Transfers of boat titles. (1) OWNERS. If an owner transfers an interest in a boat, other than by the creation of a security interest, the owner shall, at the time of the delivery of the boat, execute an assignment and warranty of title to the transferee in the space provided therefor on the certificate of origin and deliver the certificate of origin and the certificate of title to the transferee. The transferee shall make application for a new certificate of title

2009−10 Wis. Stats. database updated and current through 2011 Wis. Act 39 and July 25, 2011. Statutory changes effective on or prior to 9−1−11 are printed as if currently in effect. Statutory changes effective after 9−1−11 are designated by NOTES. See Are The Statutes on this Website Official?

Electronic reproduction of 2009−10 Wis. Stats. database, current through 2011 Wis. Act 39 and July 25, 2011.

as provided under s. 30.549 (2) and shall include in the application the certificate of origin.

(2) DEALERS. If a dealer acquires a new or used boat and holds it for resale the dealer need not send the certificate of title or application for original certificate to the department. Upon transferring the boat to another person the dealer shall immediately give such person on a form prescribed by the department a receipt for all title, registration, security interest and sales tax moneys paid to the dealer for transmittal to the department when required. The dealer shall promptly execute the assignment and warranty of title, showing the name and address of the transferee and of any secured party holding a security interest created or reserved at the time of the resale, in the spaces provided therefor on the certificate of origin or the certificate of title, and shall, within 7 business days following the sale or transfer, deliver the certificate of origin and the certificate of title or application for certificate of title to the transferee.

(3) INVOLUNTARY TRANSFERS. (a) If the interest of an owner in a boat passes to another other than by voluntary transfer, the transferee shall, except as provided in par. (b), promptly mail or deliver to the department the last certificate of title, if available, and the documents required by the department to legally effect such transfer, and an application for a new certificate in the form the department prescribes.

(b) If the interest of the owner is terminated or the boat is sold under a security agreement by a secured party, the transferee shall promptly mail or deliver to the department the last certificate of title, an application for a new certificate in the form the department prescribes, and an affidavit made by or on behalf of the secured party that the boat was repossessed and that the interest of the owner was lawfully terminated or sold pursuant to the terms of the security agreement.

(c) A person holding a certificate of title whose interest in the boat has been extinguished or transferred other than by voluntary transfer shall mail or deliver the certificate to the department upon request of the department. The delivery of the certificate pursuant to the request of the department does not affect the rights of the person surrendering the certificate, and the action of the department in issuing a new certificate of title as provided herein is not conclusive upon the rights of an owner or secured party.

(d) 1. In all cases of the transfer of a boat owned by a decedent, except under subd. 2., ward, trustee or bankrupt, if the department receives all of the following the department shall accept the following as sufficient evidence of the transfer of ownership:

a. Evidence satisfactory to the department of the appointment of a trustee in bankruptcy or of the issuance of letters testamentary or other letters authorizing the administration of a decedent's estate, letters of guardianship, or letters of trust.

b. Title executed by the personal representative, guardian, or trustee.

c. Evidence concerning payment of sales or use taxes required under s. 77.61 (1) or evidence that the transfer is exempt from sales or use taxes.

2. a. The department shall transfer the decedent's interest in a boat to his or her surviving spouse upon receipt of the title executed by the surviving spouse and an affidavit signed by the spouse that includes the date of death of the decedent; the approximate value and description of the boat; and a statement that the spouse is personally liable for the decedent's debts and charges to the extent of the value of the boat, subject to s. 859.25.

b. The transfer shall not affect any lien on the boat.

c. Except as provided in subd. 2. d., no more than 5 boats may be transferred under this subdivision.

d. The limit in subd. 2. c. does not apply if the surviving spouse proceeds under s. 867.03 (1g) and the total value of the decedent's property subject to administration in the state, including boats transferred under this subdivision, does not exceed $50,000.

3. Upon compliance with this paragraph, neither the secretary nor the department shall bear any liability or responsibility for the transfer of a boat in accordance with this paragraph.

(4) NEW CERTIFICATES ISSUED. (a) The department, upon receipt of a properly assigned certificate of title, with an application for a new certificate of title, the required fee and any other transfer documents required by law, to support the transfer, shall issue a new certificate of title in the name of the transferee as owner.

(b) The department, upon receipt of an application for a new certificate of title by a transferee other than by voluntary transfer, with proof of the transfer, the required fee and any other documents required by law, shall issue a new certificate of title in the name of the transferee as owner.

(c) The department shall file and retain for 5 years a record of every surrendered certificate of title, the file to be maintained so as to permit the tracing of title of the boat designated therein.

History: 1987 a. 397; 1989 a. 56, 128; 1991 a. 269; 1997 a. 27; 1999 a. 94; 2001 a. 102; 2005 a. 216.

Cross−reference: See also s. NR 5.07, Wis. adm. code.

30.543 Report of stolen or abandoned boats. Each sheriff and police department in the state shall immediately report to the department of justice each boat reported stolen or recovered within its jurisdiction and the department of justice shall subsequently report such information to the national crime information center.

History: 1987 a. 397.

30.544 Inspection of boats purchased out−of−state. For purposes of enforcement, conservation wardens or local law enforcement officials, after presenting appropriate credentials to the owner of a boat which was purchased outside of this state and which is subject to the certificate of title requirements of this chapter, shall inspect the boat's engine serial number or hull identification number.

History: 1987 a. 397.

30.547 Alterations and falsifications prohibited. (1) No person may intentionally falsify an application for a certificate of title or a certificate of title issued under s. 30.537 (1) or 30.541 (4).

(2) No person may intentionally falsify an application for a certificate of number or registration issued under s. 30.52.

(3) No person may intentionally alter, remove or change any number or other character in an engine serial number.

(4) No person may do any of the following:

(a) Intentionally alter, remove or change any number or other character in a hull identification number.

(b) Manufacture a hull identification number that the person knows to be false to be placed on a boat that is manufactured after November 1, 1972.

(c) Place a hull identification number that the person knows to be false on a boat that is manufactured after November 1, 1972.

History: 1987 a. 397; 1997 a. 198; 2001 a. 16.

30.549 Transfer of ownership of boats with a certificate of title, certificate of number or registration. (1) DUTY OF SELLER. (a) If the owner of a boat transfers all or any part of the owner's interest in the boat, other than by the creation of a security interest, the owner shall give the current certificate of number card or the registration card to the new owner and shall deliver the current certificate of title, if the boat is required to be titled, to the new owner as provided under s. 30.541 (1). If the owner does not possess a current certificate of number or registration or a current title, the owner shall provide to the department any documentation or information the department determines to be necessary to effect the transfer of ownership.

(b) When the owner of a boat that is voluntarily registered pursuant to s. 30.52 (1) (b) 1m. transfers all or any part of the owner's

Electronic reproduction of 2009−10 Wis. Stats. database, current through 2011 Wis. Act 39 and July 25, 2011.

interest in the boat, other than by the creation of a security interest, the owner shall send written notification of the transfer to the department within 15 days after the date of transfer.

(2) DUTY OF PURCHASER. (a) Transfer of the ownership of a boat terminates the certificate of title and the certificate of number or registration for the boat except in the case of a transfer of a part interest which does not affect the transferor's right to operate the boat. The transferee shall make application for a new certificate of title and a new certificate of number or registration within 10 days after the date of purchase as prescribed by the department. Upon receipt of the application accompanied by the required fee, the department shall issue a new certificate of title and a new certificate of number card or registration card for the boat.

(b) The purchaser of a boat that is voluntarily registered pursuant to s. 30.52 (1) (b) 1m. need not register the boat upon transfer of ownership.

(c) Notwithstanding s. 30.52 (5) (a) 2. or (b) 2., the department may not issue new certification decals or new registration decals if the fee specified under s. 30.52 (3) (h) rather than the appropriate fee specified under s. 30.52 (3) (b) to (g) is paid. The department shall not award a new identification number to the boat unless compliance with federal numbering regulations requires otherwise.

History: 1979 c. 275; 1983 a. 27; 1987 a. 397 s. 5; Stats. 1987 s. 30.549; 1991 a. 39; 1997 a. 198; 2001 a. 16.

30.55 Notice of abandonment or destruction of boat or change of address. (1) DESTRUCTION OR ABANDONMENT. If a boat covered by a certificate of title and certificate of number or registration issued by this state is destroyed or abandoned, the owner shall notify the department of that fact within 15 days after the destruction or abandonment and shall at the same time return the certificate of title and certificate of number card or registration card to the department for cancellation.

(2) CHANGE OF ADDRESS. If a person, after applying for a certificate of title and certificate of number or registration or after receiving a certificate of title and certificate of number card or a registration card, moves from the address given in the application or the card, he or she, within 15 days after moving, shall notify the department in writing of both the old and new address and of any identification numbers awarded under this chapter.

History: 1973 c. 302; 1983 a. 27; 1987 a. 397.

30.553 Sharing boat title records. (1) At time intervals to be determined by the department, but at least quarterly, the department shall, upon request, provide boat manufacturers with the department's records under ss. 30.537 (2) and 30.541 (4) (c) for the primary purpose of validating the hull identification numbers and engine serial numbers provided by applicants for certificate of title.

(2) Upon examination, if a boat manufacturer discovers a discrepancy between the information contained in the department's records and the manufacturer's records, the manufacturer shall notify the department of the discrepancy and the department shall investigate and determine which is the correct information.

History: 1987 a. 397.

30.57 Perfection of security interests. (1) Except as provided in sub. (2), a security interest in a boat of a type for which a certificate of title is required is not valid against creditors of the owner or subsequent transferees or secured parties of the boat unless perfected as provided in this section and ss. 30.572 and 30.573.

(2) Sections 30.57 to 30.576 do not apply to any of the following:

(a) A lien given by statute to a supplier of services or materials for a boat.

(b) A lien given by statute to the United States, this state or a political subdivision of this state.

(c) A security interest governed by ch. 409 that is created by a manufacturer or dealer who holds the boat for sale.

(3) Except as provided in sub. (4), a security interest is perfected by the delivery to the department of the existing certificate of title, if any, an application for a certificate of title containing the name and address of the secured party, and the required fee. The security interest is perfected as of the later of the time of its delivery or the time of the attachment of the security interest.

(4) If a secured party whose name and address is contained on the certificate of title for a boat acquires a new or additional security interest in the boat, the new or additional security interest is perfected at the time of its attachment under s. 409.203.

(5) An unperfected security interest is subordinate to the rights of persons described in s. 409.317.

(6) The rules of priority stated in s. 409.322, the other sections referred to in that section, and subch. III of ch. 409 shall, to the extent appropriate, apply to conflicting security interests in a boat of a type for which a certificate of title is required.

(7) The rules stated in subch. VI of ch. 409 governing the rights and duties of secured parties and debtors and the requirements for, and effect of, disposition of a boat by a secured party, upon default shall, to the extent appropriate, govern the rights of secured parties and owners with respect to security interests in boats perfected under this section and ss. 30.572 and 30.573.

(8) If a boat is subject to a security interest when brought into this state, s. 409.316 states the rules which determine the validity and perfection of the security interest in this state.

History: 1991 a. 39; 2001 a. 10.

30.571 Notification of person who has perfected security interest. If the department receives information from another state that a boat that is titled in this state is being titled in the other state and the information does not show that a perfected security interest, as shown by the records of the department, has been satisfied, the department shall notify the person who has perfected the security interest. The person shall pay the department the fee under s. 30.537 (4) (e) for each notification.

History: 1991 a. 39.

30.572 Duties on creation of security interest. (1) Subsections (2) to (4) apply if an owner creates a security interest in a boat of a type for which a certificate of title is required, unless the name and address of the secured party already appears on the certificate of title for the boat.

(2) At the time that the security interest is created, the owner shall complete, in the space provided on the certificate of title or on a separate form prescribed by the department, an application to name the secured party on the certificate, showing the name and address of the secured party. The owner shall deliver the certificate, application and the fee required under s. 30.537 (4) (d) to the secured party.

(3) Within 10 days after receipt, the secured party shall deliver the certificate, application and fee to the department.

(4) Upon receipt of the certificate of title, application and fee, the department shall issue to the owner a new certificate containing the name and address of the new secured party. The department shall deliver to the new secured party and to the register of deeds for the county in which the debtor resides, memoranda, in a form prescribed by the department, of the notation of the security interest upon the certificate. The department shall deliver to the secured party and to the register of deeds additional memoranda of any assignment, termination or release of the security interest.

(5) A register of deeds may maintain a file of all memoranda received from the department under sub. (4). A filing, however, is not required for a perfection, assignment or release of a security interest, which is effective upon compliance with ss. 30.57 (3), 30.573 and 30.574.

History: 1991 a. 39.

Electronic reproduction of 2009−10 Wis. Stats. database, current through 2011 Wis. Act 39 and July 25, 2011.

30.573 Assignment of security interest. (1) Except as otherwise provided in s. 409.308 (5), a secured party may assign, absolutely or otherwise, the secured party's security interest in a boat to a person other than the owner without affecting the interest of the owner or the validity of the security interest, but any person without notice of the assignment is protected in dealing with the secured party as the holder of the security interest and the secured party remains liable for any obligations as a secured party until the assignee is named as secured party on the certificate of title.

(2) Subject to s. 409.308 (5), to perfect an assignment, the assignee may deliver to the department the certificate of title, the fee required under s. 30.537 (4) (f) and an assignment by the secured party named in the certificate in the form the department prescribes. Upon receipt, the department shall name the assignee as a secured party on the certificate and issue a new certificate.

History: 1991 a. 39; 2001 a. 10.

30.574 Release of security interest. (1) Within one month, or within 10 days following written demand by the debtor, after there is no outstanding obligation and no commitment to make advances, incur obligations or otherwise give value, secured by the security interest in a boat under any security agreement perfected under ss. 30.57, 30.572 and 30.573 between the owner and the secured party, the secured party shall execute and deliver to the owner a release of the security interest in the form and manner prescribed by the department and a notice to the owner stating in no less than 10−point boldface type the owner's obligation under sub. (2). If the secured party fails to execute and deliver the release and notice of obligation as required by this subsection, the secured party is liable to the owner for $25 and for any loss caused to the owner by the failure.

(2) Within 5 days after receipt of the release and notice of obligation, the owner, other than a dealer holding the boat for resale, shall mail or deliver the certificate and release to the department. The department shall release the secured party's rights on the certificate and issue a new certificate.

History: 1991 a. 39.

30.575 Secured party's and owner's duties. (1) A secured party named in a certificate of title shall, upon written request of the owner or of another secured party named on the certificate, disclose any pertinent information about the secured party's security agreement and the indebtedness secured by it.

(2) An owner shall promptly deliver the certificate of title to any secured party who is named on it or who has a security interest in the boat described in it under any applicable prior law of this state, upon receipt of a notice from the secured party that the secured party's security interest is to be assigned, extended or perfected.

(3) A secured party who fails to disclose information under sub. (1) shall be liable to the owner for any loss caused by the failure to disclose.

(4) An owner who fails to deliver the certificate of title to a secured party requesting it under sub. (2) shall be liable to the secured party for any loss caused to the secured party by the failure to deliver.

History: 1991 a. 39.

30.576 Method of perfecting exclusive. (1) Except as provided in sub. (2) and subject to s. 409.311 (4), the method provided in ss. 30.57 to 30.575 of perfecting and giving notice of security interests subject to those sections is exclusive. Security interests subject to ss. 30.57 to 30.575 are exempt from the provisions of law that otherwise require or relate to the filing of instruments creating or evidencing security interests.

(2) Subsection (1) does not affect the validity of a security interest perfected before January 1, 1992.

History: 1991 a. 39; 2001 a. 10.

30.577 Suspension or revocation of certificate of title. (1) The department shall suspend or revoke a certificate of title for a boat if it finds any of the following:

(a) The certificate of title was fraudulently procured, erroneously issued or prohibited by law.

(b) The boat has been scrapped, dismantled or destroyed.

(c) A transfer of title is set aside by a court by order or judgment.

(2) Suspension or revocation of a certificate of title does not, in itself, affect the validity of a security interest noted on it.

(3) When the department suspends or revokes a certificate of title, the owner or person in possession of the certificate shall, within 5 days after receiving notice of the suspension or revocation, mail or deliver the certificate to the department.

(4) The department may seize and impound a certificate of title that is suspended or revoked.

History: 1991 a. 39.

30.578 Grounds for refusing issuance of certificate of title. The department shall refuse issuance of a certificate of title if any required fee is not paid or if it has reasonable grounds to believe that any of the following exists:

(1) The person alleged to be the owner of the boat is not the owner.

(2) The application contains a false or fraudulent statement.

(3) The applicant fails to furnish information or documents required by the department.

History: 1991 a. 269.

30.60 Classification of motorboats. For the purposes of ss. 30.61 and 30.62, motorboats are divided on the basis of their length into 4 classes as follows:

(1) Class A—those less than 16 feet.

(2) Class 1—those 16 feet or over but less than 26 feet.

(3) Class 2—those 26 feet or over but less than 40 feet.

(4) Class 3—those 40 feet or over.

30.61 Lighting equipment. (1) WHEN LIGHTS REQUIRED; PROHIBITED LIGHTS. (a) No person shall operate any motorboat at any time from sunset to sunrise unless such motorboat carries the lighting equipment required by this section and unless such equipment is lighted when and as required by this section.

(b) No owner shall give permission for the operation of a motorboat at any time from sunset to sunrise unless such motorboat is equipped as required by this section.

(c) No person shall exhibit from or on any motorboat when under way at any time from sunset to sunrise any light which may be mistaken for those required by this section.

(2) LIGHTS FOR MOTORBOATS OF CLASSES A AND 1. All motorboats of classes A and 1 when under way at any time from sunset to sunrise shall carry and have lighted the following lamps:

(a) One lamp aft showing a bright white light all around the horizon.

(b) One combined lamp in the fore part of the motorboat and lower than the white light aft, showing green to starboard and red to port and so fixed that each side of the combined lamp throws a light from directly ahead to 2 points abaft the beam on its respective side.

(3) LIGHTS FOR MOTORBOATS OF CLASSES 2 AND 3. All motorboats of classes 2 and 3 when under way at any time from sunset to sunrise shall carry and have lighted the following lamps:

(a) One lamp in the fore part of the boat as near the stem as practicable, so constructed as to show an unbroken bright white light over an arc of the horizon of 20 points of the compass and so fixed as to throw the light from directly ahead to 2 points abaft the beam on either side.

2009−10 Wis. Stats. database updated and current through 2011 Wis. Act 39 and July 25, 2011. Statutory changes effective on or prior to 9−1−11 are printed as if currently in effect. Statutory changes effective after 9−1−11 are designated by NOTES. See Are The Statutes on this Website Official?

Electronic reproduction of 2009−10 Wis. Stats. database, current through 2011 Wis. Act 39 and July 25, 2011.

(b) One lamp aft showing a bright white light all around the horizon and higher than the white light forward.

(c) On the starboard side, one lamp showing a green light, and on the port side, one lamp showing a red light, both fitted with inboard screens of sufficient height and so set as to prevent these lights from being seen across the bow. Each such side lamp shall be so constructed as to show an unbroken light over an arc of the horizon of 10 points of the compass and shall be so fixed as to throw the light from directly ahead to 2 points abaft the beam on its respective side.

(4) SAILBOATS WITH MOTORS. Sailboats equipped with motors and being propelled in whole or in part by such motor must comply with sub. (2) or (3), whichever is applicable. Whenever such a sailboat is being propelled entirely by sail at any time from sunset to sunrise, it shall have lighted the lamps showing the colored lights specified in sub. (2) or (3), but not the lamps showing the white lights, and shall carry ready at hand a lantern or flashlight showing a white light which shall be exhibited in sufficient time to avert collision.

(5) SAILBOATS WITHOUT MOTORS AND ROWBOATS. Every boat propelled by muscular power and every sailboat not equipped with a motor, when under way at any time from sunset to sunrise, shall carry ready at hand a lantern or flashlight showing a white light which shall be exhibited in sufficient time to avert collision.

(6) CERTAIN MOORED, ANCHORED OR DRIFTING BOATS; OTHER STRUCTURES. (a) Except as provided under par. (b), any moored, anchored or drifting boat or any other fixed and floating structure outside designated mooring areas or beyond 200 feet from the shoreline is required to be lighted from sunset to sunrise by a white light visible all around the horizon.

(b) This subsection does not require any light to be shone from duck blinds constructed on emergent vegetation.

(7) PERFORMANCE SPECIFICATIONS FOR LAMPS. Every white light prescribed by this section shall be of such character as to be visible at a distance of at least 2 miles on a dark night with clear atmosphere. Every colored light prescribed by this section shall be of such character as to be visible at a distance of at least one mile on a dark night with clear atmosphere.

(8) OPTIONAL LIGHTING REQUIREMENTS. Any boat may carry and exhibit the lights required by the federal regulations for preventing collisions at sea, 1948, federal act of October 11, 1951, (33 USC 143−147d) as amended, in lieu of the lights required by subs. (2) and (3).

(9) DEPARTMENT TO PROMULGATE RULES. The department shall promulgate rules modifying or supplementing the lighting requirements of this section as necessary to keep the requirements in conformity with the lighting rules adopted by the U.S. coast guard.

(10) OPERATION OF PERSONAL WATERCRAFT. (a) Notwithstanding subs. (1), (2), (8) and (9), no person may operate a personal watercraft at any time from sunset to sunrise.

(b) If a person operates a personal watercraft in violation of par. (a), the operation shall be subject to additional penalties for any failure to comply with the applicable lighting requirements under subs. (1), (2), (8) and (9).

History: 1973 c. 302; 1979 c. 275; 1985 a. 243; 1987 a. 399; 1989 a. 359; 1991 a. 257.

Cross−reference: See also s. NR 5.17, Wis. adm. code.

30.62 Other equipment. (1) WHEN EQUIPMENT REQUIRED. No person shall operate any boat on the waters of this state unless such boat is equipped as required by this section and the rules of the department promulgated under this section. No owner of a boat shall rent such boat to any other person for use upon the waters of this state unless such boat is equipped at the time of rental as required by this section and the rules of the department promulgated under this section. If such boat is properly equipped at the time of rental for conditions then existing, the responsibility of the owner under this section is met, notwithstanding a subsequent change in the number of passengers or a change in time from daylight to dark.

(2) MUFFLER REQUIREMENT AND NOISE LEVEL STANDARDS. (a) *Mufflers.* The engine of every motorboat propelled by an internal combustion engine and used on the waters of this state shall be equipped and maintained with a muffler, underwater exhaust system or other noise suppression device.

(b) *Maximum noise levels for operation.* No person may operate a motorboat powered by an engine on the waters of this state in such a manner as to exceed a noise level of 86 measured on an "A" weighted decibel scale.

(c) *Maximum noise levels for sale.* No person may sell, resell or offer for sale any motorboat for use on the waters of the state if the motorboat has been so modified that it cannot be operated in such a manner that it will comply with the noise level requirements under par. (b).

(d) *Maximum noise level for manufacture.* 1. No person may manufacture and offer for sale any motorboat for use on the waters of this state if the motorboat cannot be operated in such a manner so as to comply with the noise level requirements under par. (b).

2. The department may promulgate rules establishing testing procedures to determine noise levels for the enforcement of this section.

3. The department may revise these rules as necessary to adjust to advances in technology.

(e) *Tampering.* No person may remove or alter any part of a marine engine, its propulsion unit or its enclosure or modify the mounting of a marine engine on a boat in such a manner as to exceed the noise levels prescribed under par. (b).

(f) *Local ordinances.* No political subdivision of this state may establish, continue in effect or enforce any ordinance that prescribes noise levels for motorboats or which imposes any requirement for the sale or use of marine engines at prescribed noise levels unless the ordinance is identical to the provisions of this subsection or rules promulgated by the department under this subsection.

(g) *Exemption for specific uses.* This subsection does not apply to any of the following:

1. A motorboat while competing in a race conducted under a permit from a town, village or city or from an authorized agency of the federal government.

2. A motorboat designed and intended solely for racing, while the boat is operated incidentally to the testing or tuning up of the motorboat and engine for the race in an area designated by and operated under a permit specified under subd. 1.

3. A motorboat on an official trial for a speed record if conducted under a permit from a town, village or city.

4. The operation of a commercial or nonrecreational fishing boat, ferry or other vessel engaged in interstate or international commerce, other than a tugboat.

(h) *Exemption by rule.* The department may promulgate by rule exemptions from compliance with this subsection for certain activities for certain types of motorboats for specific uses and for specific areas of operation.

(2m) OVERPOWERING. No person may sell, equip or operate, and no owner of a boat may allow a person to operate, a boat with any motor or other propulsion machinery beyond its safe power capacity, taking into consideration the type and construction of such watercraft and other existing operating conditions.

(3) PERSONAL FLOTATION DEVICES. (a) Every boat, except a sailboard and except as provided in par. (b), shall carry at least one personal flotation device prescribed by federal regulations for each person on board or being attended by the boat, so placed as to be readily accessible and available to the persons.

(b) No person may operate a personal watercraft unless each person riding on the personal watercraft is wearing a personal

2009−10 Wis. Stats. database updated and current through 2011 Wis. Act 39 and July 25, 2011. Statutory changes effective on or prior to 9−1−11 are printed as if currently in effect. Statutory changes effective after 9−1−11 are designated by NOTES. See Are The Statutes on this Website Official?

Electronic reproduction of 2009−10 Wis. Stats. database, current through 2011 Wis. Act 39 and July 25, 2011.

flotation device that is a type I, type II, type III or type V personal flotation device as specified under 33 CFR part 175, subpart B.

(3m) SAFETY DEVICES FOR PERSONAL WATERCRAFT. No person may operate a personal watercraft that is equipped by the manufacturer with an engine cutoff switch activated by a lanyard unless the engine cutoff switch is in good working order and the lanyard is attached in the manner prescribed by the manufacturer to the operator or the operator's clothing or personal flotation device. No person may sell a personal watercraft manufactured after January 1, 1993, unless the personal watercraft is equipped by the manufacturer with an engine cutoff switch activated by a lanyard or is equipped by the manufacturer with a self−circling safety feature.

(4) FIRE EXTINGUISHERS. (a) Every motorboat, except outboards of open construction, shall be provided with such number, size and type of fire extinguishers, capable of promptly and effectively extinguishing burning gasoline, as prescribed by rules of the department. Such fire extinguishers shall be at all times kept in condition for immediate and effective use and shall be so placed as to be readily accessible. "Open construction" means construction which will not permit the entrapment of explosive or flammable gases or vapors.

(b) This subsection does not apply to a motorboat while competing in a race conducted pursuant to a permit from a town, village or city or from an authorized agency of the U.S. government, nor does it apply to a boat designed and intended solely for racing, while the boat is operated incidentally to the tuning up of the boat and engine for the race at the race location on the day of the race.

(5) BACKFIRE FLAME ARRESTERS. Every boat equipped with an inboard motor using gasoline as a fuel shall have the carburetors of every inboard gasoline motor fitted with an efficient device for arresting backfire flames. The device shall meet the specifications prescribed by federal regulations.

(6) BILGE, ENGINE AND FUEL COMPARTMENT VENTILATORS. Every boat, except open boats, using as fuel any liquid of a volatile nature, shall be provided with an efficient natural or mechanical ventilation system which is capable of removing resulting inflammable or explosive gases.

(8) BATTERY COVER. Every motorboat equipped with storage batteries shall be provided with suitable supports and secured against shifting with the motion of the boat. Such storage batteries shall be equipped with a nonconductive shielding means to prevent accidental shorting of battery terminals.

(9) DEPARTMENT MAY PROMULGATE RULES. The department shall promulgate such rules modifying or supplementing the associated equipment requirements of this section as are necessary to keep those requirements in conformity with federal regulations.

History: 1973 c. 302; 1979 c. 275; 1983 a. 316; 1985 a. 332 s. 251 (1); 1987 a. 399; 1989 a. 224, 359; 1991 a. 257; 1993 a. 167, 437; 1997 a. 198; 2005 a. 308.

Cross−reference: See also ss. NR 5.001, 5.10, 5.11, 5.125, and 5.13, Wis. adm. code.

30.625 Rental of motorboats. (1) No person who is engaged in the rental or leasing of motorboats to the public may do any of the following:

(a) Rent or lease a motorboat for operation by a person who will be operating a motorboat for the first time in each calendar year and who does not hold a valid certificate issued under s. 30.74 (1) unless the person engaged in the rental or leasing gives the person instruction on how to operate a motorboat in the manner established by the department under s. 30.74 (1) (am).

(b) Rent or lease a personal watercraft to a person under 16 years of age.

(c) Rent or lease a personal watercraft without providing the person who will be operating the personal watercraft with a personal flotation device that meets the requirements specified under s. 30.62 (3) (b).

(1m) No person who is under 16 years of age may rent or lease a personal watercraft.

History: 1991 a. 257; 2005 a. 356 ss. 1b to 1e, 8; 2009 a. 180.

Cross−reference: See also s. NR 5.16, Wis. adm. code.

30.63 Sale and use of certain outboard motors restricted. (1) SALE. No person may sell any new outboard motor for use in the waters of this state unless such motor is equipped with a crankcase effectively sealed to prevent the drainage of raw fuel into the waters in which the motor is operated.

(2) USE. Beginning January 1, 1990, no person may operate an outboard motor in the waters of this state unless such motor is equipped with a crankcase effectively sealed to prevent the drainage of raw fuel into the waters in which such motor is operated.

History: 1973 c. 125; 1989 a. 56.

30.635 Motorboat prohibition. On lakes 50 acres or less having public access, motorboats may not be operated in excess of slow−no−wake speed, except when such lakes serve as thoroughfares between 2 or more navigable lakes. The department by rule may modify or waive the requirements of this section as to particular lakes, if it finds that public safety is not impaired by such modification or waiver.

History: 1973 c. 302; Stats. 1973 s. 30.63; 1973 c. 336; Stats. 1973 s. 30.635.

Cross−reference: See also ss. NR 5.20 and 5.21, Wis. adm. code.

30.64 Patrol boats. (1) The operator of a patrol boat, including a commission warden, as defined in s. 939.22 (5), when responding to an emergency call or when in pursuit of an actual or suspected violator of the law, need not comply with this subchapter or ordinances under s. 30.77 when a siren or emergency light is activated or, if the patrol boat is equipped with a siren and an emergency light, when both the siren and emergency light are activated, and if due regard is given to the safety of other persons in the vicinity. If an emergency light is used, it shall be of a type and design specified under 33 CFR 88.11 or 88.12.

(2) Upon the approach of a patrol boat, including a patrol boat operated by a commission warden, as defined in s. 939.22 (5), giving an audio or visual signal, the operator of a boat shall reduce the boat speed to slow−no−wake and yield the right−of−way to the patrol boat until it has passed.

(3) No person operating a boat may refuse to stop after being requested or signaled to do so by a law enforcement officer or a commission warden, as defined in s. 939.22 (5).

History: 1979 c. 275; 1993 a. 167; 2005 a. 308; 2007 a. 27.

30.65 Traffic rules. (1) MEETING; OVERTAKING; RIGHT−OF−WAY. Every person operating a boat shall comply with the following traffic rules, except when deviation therefrom is necessary to comply with federal pilot rules while operating on the navigable waters of the United States:

(a) When 2 motorboats are approaching each other "head and head," or so nearly so as to involve risk of collision, each boat shall bear to the right and pass the other boat on its left side.

(b) When 2 motorboats are approaching each other obliquely or at right angles, the boat which has the other on her right shall yield the right−of−way to the other. "Right" means from dead ahead, clockwise to 2 points abaft the starboard beam.

(d) When a motorboat and a boat propelled entirely by sail or muscular power are proceeding in such a direction as to involve risk of collision, the motorboat shall yield the right−of−way to the other boat.

(e) A boat may overtake and pass another boat on either side if it can be done with safety but the boat doing the overtaking shall yield the right−of−way to the boat being overtaken, notwithstanding any other rule in this section to the contrary.

Electronic reproduction of 2009−10 Wis. Stats. database, current through 2011 Wis. Act 39 and July 25, 2011.

(f) A boat granted the right−of−way by this section shall maintain her course and speed, unless to do so would probably result in a collision.

(2) ADDITIONAL TRAFFIC RULES. The department may promulgate such additional traffic rules as it deems necessary in the interest of public safety. Such rules shall conform as nearly as possible to the federal pilot rules.

History: 1985 a. 332 s. 251 (1); 1993 a. 490.

30.66 Speed restrictions. (1) SPEED TO BE REASONABLE AND PRUDENT. No person shall operate a motorboat at a speed greater than is reasonable and prudent under the conditions and having regard for the actual and potential hazards then existing. The speed of a motorboat shall be so controlled as to avoid colliding with any object lawfully in or on the water or with any person, boat or other conveyance in or on the water in compliance with legal requirements and exercising due care.

(2) FIXED LIMITS. In addition to complying with sub. (1), no person may operate a motorboat at a speed in excess of the posted notice as established by regulatory markers.

(3) PROHIBITED OPERATION. (a) No person may operate a motorboat within 100 feet of any dock, raft, pier, or buoyed restricted area on any lake at a speed in excess of slow−no−wake.

(ag) 1. Except as provided in subd. 2., no person may operate a motorboat, other than a personal watercraft, at a speed in excess of slow−no−wake within 100 feet of the shoreline of any lake.

2. In its ordinances enacted under s. 30.77, a city, village, town, public inland lake protection and rehabilitation district, or a town sanitary district may provide an exemption from the prohibition in subd. 1. or may substitute a lesser number of feet.

3. This paragraph does not affect any of the following:

a. The authority of a local governmental unit specified in subd. 2. to enact more restrictive ordinances under s. 30.77.

b. The authority of the Dane County board to enact more restrictive ordinances under s. 33.455 (3).

(ar) No person may operate a personal watercraft at a speed in excess of slow−no−wake within 200 feet of the shoreline of any lake.

(b) No person may operate a personal watercraft at a speed in excess of slow−no−wake within 100 feet of any other boat.

(c) Paragraphs (a) to (b) do not apply to pickup or drop areas that are marked with regulatory markers and that are open to operators of personal watercraft and to persons and motorboats engaged in water skiing or similar activity.

History: 1973 c. 302; 1981 c. 303; 1991 a. 257; 1997 a. 198; 2009 a. 31.
Cross−reference: See also s. NR 5.001, Wis. adm. code.

30.67 Accidents and accident reports. (1) DUTY TO RENDER AID. Insofar as the operator of a boat can do so without serious danger to the operator's boat or to persons on board, the operator of a boat involved in a boating accident shall stop the operator's boat and render to other persons affected thereby such assistance as may be practicable and necessary to save them from or minimize any danger caused by the accident. The operator shall give the operator's name and address and identification of the operator's boat to any person injured and to the owner of any property damaged in the accident.

(2) DUTY TO REPORT. (a) If a boating accident results in death or injury to any person, the disappearance of any person from a boat under circumstances indicating death or injury, or property damage, every operator of a boat involved in an accident shall, without delay and by the quickest means available, give notice of the accident to a conservation warden or local law enforcement officer and shall file a written report with the department on the form prescribed by it. The department shall promulgate rules necessary to keep accident reporting requirements in conformity with rules adopted by the U.S. coast guard.

(b) If the operator of a boat is physically incapable of making the report required by this subsection and there was another occupant in the boat at the time of the accident capable of making the report the other occupant shall make such report.

(3) TERMS DEFINED. In this section:

(a) "Boating accident" means a collision, accident or other casualty involving a boat.

(b) "Injury" means any injury of a physical nature resulting in medical treatment, disability for more than 24 hours or loss of consciousness.

(c) "Total property damage" means the sum total cost of putting the property damaged in the condition it was in before the accident, if repair thereof is practical, and if not practical, the sum total cost of replacing the property.

(4) REPORTS CONFIDENTIAL. No report required by this section to be filed with the department shall be used as evidence in any trial, civil or criminal, arising out of an accident, except that the department shall furnish upon demand of any person who has or claims to have made such a report, or upon demand of any court, a certificate showing that a specified accident report has or has not been made to the department solely to prove a compliance or a failure to comply with the requirement that such a report be made.

(5) TRANSMITTAL OF INFORMATION TO FEDERAL AND STATE AUTHORITIES. If any request for information available on the basis of reports filed pursuant to this section is duly made by an authorized official or agency of the U.S. government or of the state which registered the boat involved or the state where the accident occurred, the department shall compile and furnish such information in accordance with such request.

(6) CORONERS AND MEDICAL EXAMINERS TO REPORT; REQUIRE BLOOD SPECIMEN. (a) Every coroner or medical examiner shall on or before the 10th day of each month report in writing to the department the death of any person within his or her jurisdiction during the preceding calendar month as the result of an accident involving a boat and the circumstances of the accident.

(b) In cases of death involving a boat in which the person died within 6 hours of the time of the accident, a blood specimen of at least 10 cc. shall be withdrawn from the body of the decedent within 12 hours after his or her death, by the coroner or medical examiner or by a physician so designated by the coroner or medical examiner or by a qualified person at the direction of the physician. All funeral directors, as defined in s. 445.01 (5), shall obtain a release from the coroner or medical examiner prior to proceeding with embalming any body coming under the scope of this section. The blood so drawn shall be forwarded to a laboratory approved by the state health officer for analysis of the alcoholic content of the blood specimen. The coroner or medical examiner causing the blood to be withdrawn shall be notified of the results of each analysis made and shall forward the results of each analysis to the state health officer. The state health officer shall keep a record of all examinations to be used for statistical purposes only. The cumulative results of the examinations, without identifying the individuals involved, shall be disseminated and made public by the state health officer. The department shall reimburse coroners and medical examiners for the costs incurred in submitting reports and taking blood specimens and laboratories for the costs incurred in analyzing blood specimens under this section.

History: 1973 c. 302; 1979 c. 275; 1989 a. 359; 1991 a. 316; 2005 a. 266.
Cross−reference: See also s. NR 5.08, Wis. adm. code.

30.675 Distress signal flag. The display on a boat or by a person of an orange flag approximately 18 by 30 inches in size shall indicate that such boat or person is in need of help.

(1) Insofar as is possible without serious danger to the operator's boat or persons on board, the operator of a boat observing a distress signal shall render to the boat or person displaying the signal such assistance as may be practicable and necessary to save the boat or person or to minimize any danger to them.

(2) No person shall display a flag like that described in sub. (1) unless such person is in need of assistance to prevent bodily injury or destruction of property.

History: 1991 a. 316.

2009−10 Wis. Stats. database updated and current through 2011 Wis. Act 39 and July 25, 2011. Statutory changes effective on or prior to 9−1−11 are printed as if currently in effect. Statutory changes effective after 9−1−11 are designated by NOTES. See Are The Statutes on this Website Official?

Electronic reproduction of 2009−10 Wis. Stats. database, current through 2011 Wis. Act 39 and July 25, 2011.

30.678 Boating safety certificates; requirements; exemptions; operation by minors. (1) MOTORBOATS OTHER THAN PERSONAL WATERCRAFT. (a) No person under 10 years of age may operate a motorboat.

(b) No person who is at least 10 years of age but under 12 years of age may operate a motorboat unless he or she is accompanied in the motorboat by a parent or guardian or by a person who is at least 18 years of age and who is designated by a parent or guardian.

(c) No person who is at least 12 years of age but under 16 years of age may operate a motorboat unless one of the following applies:

1. The person holds a valid boating safety certificate issued under s. 30.74 (1) (a) or a valid boating safety certificate that is honored under s. 30.74 (1) (c).

2. The person is accompanied in the motorboat by a parent or guardian or by a person who is at least 18 years of age and who is designated by a parent or guardian.

(d) No person who was born on or after January 1, 1989, and who is 16 years of age or older may operate a motorboat unless the person holds a valid safety certificate issued under s. 30.74 (1) (a) or a valid boating safety certificate that is honored under s. 30.74 (1) (c).

(e) Paragraphs (a) to (d) do not apply to the operation of a personal watercraft.

(2) PERSONAL WATERCRAFT. (a) No person under 12 years of age may operate a personal watercraft.

(b) No person who is 12 years of age or older but under 16 years of age may operate a personal watercraft unless he or she is in possession of a valid certificate issued under s. 30.74 (1) (a) or a valid boating safety certificate that is honored under s. 30.74 (1) (c).

(c) No person who was born on or after January 1, 1989, and who is 16 years of age or older may operate a personal watercraft unless the person holds a valid safety certificate issued under s. 30.74 (1) (a) or a valid boating safety certificate that is honored under s. 30.74 (1) (c).

(3) EXEMPTION. Subsections (1) (b), (c), and (d) and (2) (b) and (c) do not apply to a person while the person is operating a motorboat as may be required as part of a boating safety course under s. 30.74 (1).

(4) PARENT AND GUARDIAN LIABILITY. A violation of sub. (1) (a), (b), (c), or (d) or (2) (a), (b), or (c) that is done with the knowledge of a parent or guardian shall be considered a violation by the parent or guardian and shall be punishable under s. 30.80.

History: 2005 a. 356 ss. 1m to 3, 7, 9, 10.

Cross−reference: See also s. NR 5.16, Wis. adm. code.

30.68 Prohibited operation. (2) NEGLIGENT OPERATION. No person may operate or use any boat, or manipulate any water skis, aquaplane or similar device upon the waters of this state in a careless, negligent or reckless manner so as to endanger that person's life, property or person or the life, property or person of another.

(3) OPERATION BY INCAPACITATED PERSON. No person in charge or control of a boat shall authorize or knowingly permit the boat to be operated by any person who by reason of physical or mental disability is incapable of operating such boat under the prevailing circumstances.

(4) CREATING HAZARDOUS WAKE OR WASH. (a) No person shall operate a motorboat so as to approach or pass another boat in such a manner as to create a hazardous wake or wash.

(b) An operator of a motorboat is liable for any damage caused to the person or property of another by the wake or wash from such motorboat unless the negligence of such other person was the primary cause of the damage.

(4m) FACING BACKWARDS. No person may operate a personal watercraft while facing backwards.

(5) OPERATING IN CIRCULAR COURSE. No person may operate a motorboat repeatedly in a circuitous course around any other boat, or around any person who is swimming, if such circuitous course is within 200 feet of such boat or swimmer; nor shall any boat or water skier operate or approach closer than 100 feet to any skin diver's flag or any swimmer unless the boat is part of the skin diving operation or is accompanying the swimmer, or unless physical conditions make compliance impossible.

(5m) TOWING BY A PERSONAL WATERCRAFT. A person may use a personal watercraft to tow a stranded or disabled boat if, during towing, the speed of the personal watercraft does not exceed slow−no−wake.

(6) RIDING ON DECKS AND GUNWALES. No person operating a motorboat may ride or sit, or may allow any other person in the motorboat to ride or sit, on the gunwales, tops of seat backs or sides or on the decking over the bow of the boat in an unsafe manner while under way, unless such person is inboard of guards or railings provided on the boat to prevent persons from being lost overboard. Nothing in this section shall be construed to prohibit entry upon the decking over the bow of the boat for the purpose of anchoring, mooring or casting off or other necessary purpose.

(7) RESTRICTED AREAS. No person shall operate a boat within a water area which has been clearly marked by buoys or some other distinguishing device as a bathing or swimming area; nor operate a boat in restricted use areas contrary to regulatory notice pursuant to s. 30.74 (2).

(8) ANCHORING IN TRAFFIC LANES. No person may anchor, place, affix or abandon any unattended boat, raft, float or similar structure in the traveled portion of any river or channel or in any traffic lane established and legally marked, so as to prevent, impede or interfere with the safe passage of any other boat through the same.

(8m) MOORING. (a) No person may use a mooring or attach a boat to a mooring buoy if the mooring or mooring buoy violates s. 30.772 or 30.773.

(b) No person may use a piling for mooring a boat, except for mooring a boat in Lake Michigan or Lake Superior or on the Mississippi River.

(9) OVERLOADING. No person may operate, and no owner of a boat may allow a person to operate, a boat that is loaded with passengers or cargo beyond its safe carrying capacity, taking into consideration weather and other existing operating conditions.

(11) UNNECESSARILY SOUNDING WHISTLES. No person shall unnecessarily sound a horn, whistle or other sound−producing device on any boat while at anchor or under way. The use of a siren on any boat except a patrol boat on patrol or rescue duty is prohibited.

(12) MOLESTING OR DESTROYING AIDS TO NAVIGATION AND REGULATORY MARKERS. No unauthorized person shall move, remove, molest, tamper with, destroy or attempt to destroy, or moor or fasten a boat (except to mooring buoys) to any navigation aids or regulatory markers, signs or other devices established and maintained to aid boaters.

History: 1971 c. 40 s. 93; 1971 c. 219; 1973 c. 302; 1975 c. 22, 39; 1983 a. 459; 1985 a. 146 s. 8; 1985 a. 243, 331; 1991 a. 257, 316; 1993 a. 236; 1997 a. 198; 2005 a. 308, 356.

Cross−reference: See also s. NR 5.001, Wis. adm. code.

30.681 Intoxicated boating. (1) OPERATION. (a) *Operating while under the influence of an intoxicant.* No person may engage in the operation of a motorboat while under the influence of an intoxicant to a degree which renders him or her incapable of safe motorboat operation.

(b) *Operating after using a controlled substance or alcohol.* 1. No person may engage in the operation of a motorboat while the person has an alcohol concentration of 0.08 or more. This subdivision does not apply to commercial motorboats.

1m. No person may engage in the operation of a motorboat while the person has a detectable amount of a restricted controlled substance in his or her blood.

2. No person may engage in the operation of a commercial motorboat while the person has a blood alcohol concentration of

Electronic reproduction of 2009−10 Wis. Stats. database, current through 2011 Wis. Act 39 and July 25, 2011.

0.04% or more by weight of alcohol in his or her blood. No person may engage in the operation of a commercial motorboat while the person has 0.04 grams or more of alcohol in 210 liters of his or her breath.

(bn) *Operating with alcohol concentrations at specified levels; below legal drinking age.* A person who has not attained the legal drinking age, as defined in s. 125.02 (8m), may not engage in the operation of a motorboat while he or she has a blood alcohol concentration of more than 0.0 but less than 0.08.

(c) *Related charges.* A person may be charged with and a prosecutor may proceed upon a complaint based upon a violation of any combination of par. (a) or (b) 1., 1m., or 2. for acts arising out of the same incident or occurrence. If the person is charged with violating any combination of par. (a) or (b) 1., 1m., or 2., the offenses shall be joined. If the person is found guilty of any combination of par. (a) or (b) 1., 1m., or 2. for acts arising out of the same incident or occurrence, there shall be a single conviction for purposes of sentencing and for purposes of counting convictions under s. 30.80 (6) (a) 2. and 3. Paragraphs (a) and (b) 1., 1m., and 2. each require proof of a fact for conviction which the others do not require.

(d) *Defenses.* In an action under par. (b) 1m. that is based on the defendant allegedly having a detectable amount of methamphetamine, gamma−hydroxybutyric acid, or delta−9−tetrahydrocannabinol in his or her blood, the defendant has a defense if he or she proves by a preponderance of the evidence that at the time of the incident or occurrence he or she had a valid prescription for methamphetamine or one of its metabolic precursors, gamma−hydroxybutyric acid, or delta−9−tetrahydrocannabinol.

(2) CAUSING INJURY. (a) *Causing injury while under the influence of an intoxicant.* No person while under the influence of an intoxicant to a degree which renders him or her incapable of safe motorboat operation may cause injury to another person by the operation of a motorboat.

(b) *Causing injury after using a controlled substance or alcohol.* 1. No person who has an alcohol concentration of 0.08 or more may cause injury to another person by the operation of a motorboat. This subdivision does not apply to commercial motorboats.

1m. No person who has a detectable amount of a restricted controlled substance in his or her blood may cause injury to another person by the operation of a motorboat.

2. No person who has a blood alcohol concentration of 0.04% or more by weight of alcohol in his or her blood may cause injury to another person by the operation of a commercial motorboat. No person who has 0.04 grams or more of alcohol in 210 liters of his or her breath may cause injury to another person by the operation of a commercial motorboat.

(c) *Related charges.* A person may be charged with and a prosecutor may proceed upon a complaint based upon a violation of any combination of par. (a) or (b) 1., 1m., or 2. for acts arising out of the same incident or occurrence. If the person is charged with violating any combination of par. (a) or (b) 1., 1m., or 2. in the complaint, the crimes shall be joined under s. 971.12. If the person is found guilty of any combination of par. (a) or (b) 1., 1m., or 2. for acts arising out of the same incident or occurrence, there shall be a single conviction for purposes of sentencing and for purposes of counting convictions under s. 30.80 (6) (a) 2. and 3. Paragraphs (a) and (b) 1., 1m., and 2. each require proof of a fact for conviction which the others do not require.

(d) *Defenses.* 1. a. In an action under this subsection for a violation of the intoxicated boating law where the defendant was operating a motorboat that is not a commercial motorboat, the defendant has a defense if he or she proves by a preponderance of the evidence that the injury would have occurred even if he or she had been exercising due care and he or she had not been under the influence of an intoxicant or did not have an alcohol concentration of 0.08 or more or a detectable amount of a restricted controlled substance in his or her blood.

b. In an action under par. (b) 1m. that is based on the defendant allegedly having a detectable amount of methamphetamine, gamma−hydroxybutyric acid, or delta−9−tetrahydrocannabinol in his or her blood, the defendant has a defense if he or she proves by a preponderance of the evidence that at the time of the incident or occurrence he or she had a valid prescription for methamphetamine or one of its metabolic precursors, gamma−hydroxybutyric acid, or delta−9−tetrahydrocannabinol.

2. In an action under this subsection for a violation of the intoxicated boating law where the defendant was operating a commercial motorboat, the defendant has a defense if he or she proves by a preponderance of the evidence that the injury would have occurred even if he or she had been exercising due care and he or she had not been under the influence of an intoxicant or did not have a blood alcohol concentration of 0.04% or more by weight of alcohol in his or her blood or 0.04 grams or more of alcohol in 210 liters of his or her breath.

History: 1985 a. 331; 1989 a. 275; 1995 a. 290, 436; 1997 a. 35, 198; 2003 a. 30, 97, 326.

30.682 Preliminary breath screening test. (1) REQUIREMENT. A person shall provide a sample of his or her breath for a preliminary breath screening test if a law enforcement officer has probable cause to believe that the person is violating or has violated the intoxicated boating law and if, prior to an arrest, the law enforcement officer requested the person to provide this sample.

(2) USE OF TEST RESULTS. A law enforcement officer may use the results of a preliminary breath screening test for the purpose of deciding whether or not to arrest a person for a violation of the intoxicated boating law or for the purpose of deciding whether or not to request a chemical test under s. 30.684. Following the preliminary breath screening test, chemical tests may be required of the person under s. 30.684.

(3) ADMISSIBILITY. The result of a preliminary breath screening test is not admissible in any action or proceeding except to show probable cause for an arrest, if the arrest is challenged, or to show that a chemical test was properly required of a person under s. 30.684.

(4) REFUSAL. There is no penalty for a violation of sub. (1). Section 30.80 (1) and the general penalty provision under s. 939.61 do not apply to that violation.

History: 1985 a. 331.

30.683 Implied consent. Any person who engages in the operation of a motorboat upon the waters of this state is deemed to have given consent to provide one or more samples of his or her breath, blood or urine for the purpose of authorized analysis as required under s. 30.684. Any person who engages in the operation of a motorboat upon the waters of this state is deemed to have given consent to submit to one or more chemical tests of his or her breath, blood or urine for the purpose of authorized analysis as required under s. 30.684.

History: 1985 a. 331.

30.684 Chemical tests. (1) REQUIREMENT. (a) *Samples; submission to tests.* A person shall provide one or more samples of his or her breath, blood or urine for the purpose of authorized analysis if he or she is arrested for a violation of the intoxicated boating law and if he or she is requested to provide the sample by a law enforcement officer. A person shall submit to one or more chemical tests of his or her breath, blood or urine for the purpose of authorized analysis if he or she is arrested for a violation of the intoxicated boating law and if he or she is requested to submit to the test by a law enforcement officer.

(b) *Information.* A law enforcement officer requesting a person to provide a sample or to submit to a chemical test under par. (a) shall inform the person at the time of the request and prior to obtaining the sample or administering the test:

1. That he or she is deemed to have consented to tests under s. 30.683;

Electronic reproduction of 2009−10 Wis. Stats. database, current through 2011 Wis. Act 39 and July 25, 2011.

2. That a refusal to provide a sample or to submit to a chemical test constitutes a violation under sub. (5) and is subject to the same penalties and procedures as a violation of s. 30.681 (1) (a); and

3. That in addition to the designated chemical test under sub. (2) (b), he or she may have an additional chemical test under sub. (3) (a).

(c) *Unconscious person.* A person who is unconscious or otherwise not capable of withdrawing consent is presumed not to have withdrawn consent under this subsection, and if a law enforcement officer has probable cause to believe that the person violated the intoxicated boating law, one or more chemical tests may be administered to the person without a request under par. (a) and without providing information under par. (b).

(2) CHEMICAL TESTS. (a) *Test facility.* Upon the request of a law enforcement officer, a test facility shall administer a chemical test of breath, blood or urine for the purpose of authorized analysis. A test facility shall be prepared to administer 2 of the 3 chemical tests of breath, blood or urine for the purpose of authorized analysis. The department may enter into agreements for the cooperative use of test facilities.

(b) *Designated chemical test.* A test facility shall designate one chemical test of breath, blood or urine which it is prepared to administer first for the purpose of authorized analysis.

(c) *Additional chemical test.* A test facility shall specify one chemical test of breath, blood or urine, other than the test designated under par. (b), which it is prepared to administer for the purpose of authorized analysis as an additional chemical test.

(d) *Validity; procedure.* A chemical test of blood or urine conducted for the purpose of authorized analysis is valid as provided under s. 343.305 (6). The duties and responsibilities of the laboratory of hygiene, department of health services and department of transportation under s. 343.305 (6) apply to a chemical test of blood or urine conducted for the purpose of authorized analysis under this section. Blood may be withdrawn from a person arrested for a violation of the intoxicated boating law only by a physician, registered nurse, medical technologist, physician assistant or person acting under the direction of a physician and the person who withdraws the blood, the employer of that person and any hospital where blood is withdrawn have immunity from civil or criminal liability as provided under s. 895.53.

(e) *Report.* A test facility which administers a chemical test of breath, blood or urine for the purpose of authorized analysis under this section shall prepare a written report which shall include the findings of the chemical test, the identification of the law enforcement officer or the person who requested a chemical test and the identification of the person who provided the sample or submitted to the chemical test. The test facility shall transmit a copy of the report to the law enforcement officer and the person who provided the sample or submitted to the chemical test.

(3) ADDITIONAL AND OPTIONAL CHEMICAL TESTS. (a) *Additional chemical test.* If a person is arrested for a violation of the intoxicated boating law or is the operator of a motorboat involved in an accident resulting in great bodily harm to or the death of someone and if the person is requested to provide a sample or to submit to a test under sub. (1) (a), the person may request the test facility to administer the additional chemical test specified under sub. (2) (c) or, at his or her own expense, reasonable opportunity to have any qualified person administer a chemical test of his or her breath, blood or urine for the purpose of authorized analysis.

(b) *Optional test.* If a person is arrested for a violation of the intoxicated boating law and if the person is not requested to provide a sample or to submit to a test under sub. (1) (a), the person may request the test facility to administer a chemical test of his or her breath or, at his or her own expense, reasonable opportunity to have any qualified person administer a chemical test of his or her breath, blood or urine for the purpose of authorized analysis. If a test facility is unable to perform a chemical test of breath, the person may request the test facility to administer the designated chemical test under sub. (2) (b) or the additional chemical test under sub. (2) (c).

(c) *Compliance with request.* A test facility shall comply with a request under this subsection to administer any chemical test it is able to perform.

(d) *Inability to obtain chemical test.* The failure or inability of a person to obtain a chemical test at his or her own expense does not preclude the admission of evidence of the results of a chemical test required and administered under subs. (1) and (2).

(4) ADMISSIBILITY; EFFECT OF TEST RESULTS; OTHER EVIDENCE. The results of a chemical test required or administered under sub. (1), (2) or (3) are admissible in any civil or criminal action or proceeding arising out of the acts committed by a person alleged to have violated the intoxicated boating law on the issue of whether the person was under the influence of an intoxicant or the issue of whether the person had alcohol concentrations at or above specified levels or a detectable amount of a restricted controlled substance in his or her blood. Results of these chemical tests shall be given the effect required under s. 885.235. This section does not limit the right of a law enforcement officer to obtain evidence by any other lawful means.

(5) REFUSAL. No person may refuse a lawful request to provide one or more samples of his or her breath, blood or urine or to submit to one or more chemical tests under sub. (1). A person shall not be deemed to refuse to provide a sample or to submit to a chemical test if it is shown by a preponderance of the evidence that the refusal was due to a physical inability to provide the sample or to submit to the test due to a physical disability or disease unrelated to the use of an intoxicant. Issues in any action concerning violation of sub. (1) or this subsection are limited to:

(a) Whether the law enforcement officer had probable cause to believe the person was violating or had violated the intoxicated boating law.

(b) Whether the person was lawfully placed under arrest for violating the intoxicated boating law.

(c) Whether the law enforcement officer requested the person to provide a sample or to submit to a chemical test and provided the information required under sub. (1) (b) or whether the request and information was unnecessary under sub. (1) (c).

(d) Whether the person refused to provide a sample or to submit to a chemical test.

History: 1985 a. 331; 1987 a. 3; 1993 a. 105; 1995 a. 27 s. 9126 (19); 2003 a. 97; 2007 a. 20 s. 9121 (6) (a).

Cross−reference: See also s. NR 5.22, Wis. adm. code.

30.686 Report arrest to department. If a law enforcement officer arrests a person for a violation of the intoxicated boating law or the refusal law, the law enforcement officer shall notify the department of the arrest as soon as practicable.

History: 1985 a. 331.

30.687 Officer's action after arrest for violating intoxicated boating law. A person arrested for a violation of the intoxicating boating law, may not be released until 12 hours have elapsed from the time of his or her arrest or unless a chemical test administered under s. 30.684 (1) (a) shows that the person has an alcohol concentration of 0.05 or less, but the person may be released to his or her attorney, spouse, relative or other responsible adult at any time after arrest.

History: 1985 a. 331; 1995 a. 436.

30.69 Water skiing. (1) PROHIBITED AT CERTAIN TIMES; EXCEPTIONS. (a) Except as provided in par. (b), no person may operate a motorboat towing a person on water skis, aquaplane or similar device unless there is in the boat a competent person in addition to the operator in a position to observe the progress of the person being towed. An observer shall be considered competent if that person can in fact observe the person being towed and relay any signals to the operator. This observer requirement does not apply to motorboats classified as Class A motorboats by the

Electronic reproduction of 2009−10 Wis. Stats. database, current through 2011 Wis. Act 39 and July 25, 2011.

department actually operated by the persons being towed and so constructed as to be incapable of carrying the operator in or on the motorboat. No person may engage in water skiing, aquaplaning or similar activity, at any time from sunset to sunrise. This restriction of the hours of water skiing does not prevent restrictions of the hours of water skiing between sunrise and sunset by local ordinances enacted pursuant to s. 30.77 (3).

(b) Paragraph (a) does not apply to duly authorized water ski tournaments, competitions, exhibitions or trials therefor, where adequate lighting is provided.

(c) In addition to complying with par. (a), no person may operate a personal watercraft that is towing a person who is on water skis, an aquaplane or similar device unless the personal watercraft is designed to seat at least 3 persons.

(2) CAREFUL AND PRUDENT OPERATION. A person operating a motorboat having in tow a person on water skis, aquaplane or similar device shall operate such boat in a careful and prudent manner and at a reasonable distance from persons and property so as not to endanger the life or property of any person.

(3) RESTRICTIONS. (a) No person operating a motorboat that is towing persons engaged in water skiing, aquaplaning or similar activity may operate the motorboat within 100 feet of any occupied anchored boat, any personal watercraft or any marked swimming area or public boat landing.

(b) No person who is engaged in water skiing, aquaplaning or similar activity may get within 100 feet of a personal watercraft or allow the tow rope while in use to get within 100 feet of a personal watercraft.

(c) No person may operate a personal watercraft within 100 feet of any of the following:

1. A motorboat towing a person who is engaged in water skiing, aquaplaning or similar activity.

2. The tow rope of a motorboat towing a person who is engaged in water skiing, aquaplaning or similar activity.

3. A person who is engaged in water skiing, aquaplaning or similar activity.

(d) Paragraphs (a) to (c) do not apply to pickup or drop areas that are marked with regulatory markers and that are open to operators of personal watercraft and to persons and motorboats engaged in water skiing or similar activity.

(4) INTOXICATED OPERATION. No person may use water skis, an aquaplane or a similar device while under the influence of an intoxicant to a degree which renders him or her incapable of safely using water skis, an aquaplane or a similar device, or under the combined influence of an intoxicant and any other drug to a degree which renders him or her incapable of safely using water skis, an aquaplane or a similar device.

History: 1973 c. 302; 1985 a. 331; 1991 a. 257, 315, 316; 1993 a. 437; 2009 a. 31.

30.70 Skin diving. No person may engage in underwater diving or swimming with the use of swimming fins or skin diving in waters other than marked swimming areas or within 150 feet of shoreline, and no person may engage in underwater diving or swimming with the use of self−contained underwater breathing apparatus in waters other than marked swimming areas, unless the location of such diving or swimming is distinctly marked by diver's flag, not less than 12 inches high and 15 inches long, displaying one diagonal white stripe 3 inches wide on a red background, and of height above the water so as to be clearly apparent at a distance of 100 yards under normal conditions, and so designed and displayed as to be visible from any point on the horizon. Except in case of emergency, anyone engaging in such diving or swimming shall not rise to the surface outside of a radius of 50 feet from such flag. No person engaged in such diving or swimming shall interfere with the operation of anyone fishing nor engage in such diving or swimming in established traffic lanes; nor shall any such person alone or with another, intentionally or unintentionally, block or obstruct any boat in any manner from proceeding to its destination where a reasonable alternative is unavailable. A reasonable alternative route is available when the otherwise unobstructed boat can proceed to its destination without reducing its lawful speed, by passing to the right or to the left of a marked diving operation.

History: 1973 c. 302.

30.71 Disposal of waste from boats equipped with toilets. (1) In this section, "outlying waters" has the meaning given in s. 29.001 (63).

(2) No person may, while maintaining or operating any boat equipped with toilets on the waters of this state, dispose of any toilet wastes in any manner into the water.

(3) No person may operate for compensation or reward an establishment that has the capacity of providing berths or moorings to 5 or more boats that are equipped with toilets and that is located on an outlying water of this state unless the establishment provides adequate fixed onshore disposal facilities for disposal of toilet wastes from the boats for which the establishment provides berths or moorings. If the establishment is unable to provide fixed onshore disposal facilities due to problems of accessibility to the boats, the establishment shall provide adequate portable disposal facilities for these toilet wastes.

(4) Any rules necessary to carry out the purposes of this section shall be promulgated jointly by the department of safety and professional services and the department of natural resources.

History: 1977 c. 395; 1979 c. 221; 1983 a. 27 s. 2202 (38); 1985 a. 332 s. 251 (1); 1995 a. 27 ss. 1691, 9116 (5); 1997 a. 248, 330; 1999 a. 32; 2011 a. 32.

The Mississippi River is an inland water of Wisconsin. The boat toilet law may be enforced on the entire width of the river bordering Minnesota and up to the center of the main channel bordering Iowa. 61 Atty. Gen. 167.

30.72 Watercraft use rules, Lower St. Croix River. (1) WATER SURFACE USE RULES. (a) The department shall promulgate rules to govern the operation of boats on the Lower St. Croix River. The rules may restrict any or all of the following:

1. The type of boats which may be used on the waters affected by the rules;

2. The areas of water which may be used by boats;

3. Speed of boats; or

4. The hours during which boating is permitted.

(b) In promulgating the rules required under par. (a), the department shall consider the physical characteristics of the waters affected, their historical uses, shoreland uses and classification, the classification of river segments under the Lower St. Croix national scenic riverway master plan, and any other features unique to the Lower St. Croix River, as well as the views of appropriate officials of counties, cities, villages and towns lying within the affected area, and of appropriate officials of agencies of the federal government and the state of Minnesota which have jurisdiction over the waters of the Lower St. Croix River.

(2) CONCURRENT REGULATIONS REQUIRED. Rules promulgated under this section are effective upon adoption of laws, rules or regulations providing for similar limitations or prohibitions on the operation and use of boats on the same segments of the Lower St. Croix River by the state of Minnesota or its agencies. In exercising the authority granted by this section, the department may enter into necessary agreements with the federal government and its agencies, or with the state of Minnesota and its agencies under s. 66.0303.

(3) ENFORCEMENT. In addition to the enforcement powers granted to the department under s. 30.74 (3), the rules promulgated under this section may be enforceable by officers of water safety patrol units having jurisdiction on waters of the Lower St. Croix River under s. 30.79 (3). All officers so empowered by this section may exercise reciprocal powers which may be conferred upon them by the state of Minnesota or its agencies or political

Electronic reproduction of 2009−10 Wis. Stats. database, current through 2011 Wis. Act 39 and July 25, 2011.

subdivisions relating to enforcement of regulations governing the use or operation of boats on the Lower St. Croix River.

History: 1975 c. 208; 1985 a. 332 s. 251 (7); 1989 a. 159; 1999 a. 150 s. 672.

NOTE: Chapter 208, laws of 1975, which created this section, contains a statement of legislative purpose in section 1. See the 1975 session law volume.

Cross−reference: See also ss. NR 5.30, 5.31, 5.32, 5.33, 5.34, and 5.36, Wis. adm. code.

30.73 Use regulations, Brule River. (1) PROHIBITED USES. No person may operate, occupy or use any motorboat or any pneumatic inner tube, inflatable raft or similar device on the Brule River or any of its stream tributaries in Douglas County. This subsection does not prohibit a person from operating, occupying or using a noninflatable nonmotorized boat, canoe or kayak.

(2) EXCEPTIONS. Subsection (1) does not apply to:

(a) Peace officers or rescue units engaged in emergency operations.

(b) Agents of the department while engaged in fish management or law enforcement activities.

(c) Persons on the Brule River within one mile of its mouth.

(3) ENFORCEMENT; LITTERING. The department shall enforce this section and restrictions on littering in the area of the Brule River and its stream tributaries in Douglas County.

(4) PENALTY. A person who violates this section is subject to the penalties provided under s. 30.80 (1).

History: 1981 c. 303.

30.74 Additional functions of department. (1) BOATING SAFETY PROGRAMS. (a) The department shall create comprehensive courses on boating safety and operation. These courses shall be offered in cooperation with schools, including tribal schools, as defined in s. 115.001 (15m), private clubs and organizations, and may be offered by the department in areas where requested and where other sponsorship is unavailable. The department shall issue certificates to persons 10 years of age or older successfully completing such courses. The department shall prescribe the course content and the form of the certificate.

(am) The department may promulgate rules to establish minimum standards and procedures for the instruction given under s. 30.625 (1) (a).

(b) The department by rule shall set the instruction fee for the course. A person conducting a course or giving instruction under this subsection shall collect the instruction fee from each person who receives instruction. The department may determine the portion of this fee, which may not exceed 50%, that the person may retain to defray expenses incurred by the person in conducting the course or giving the instruction. The person shall remit the remainder of the fee or, if nothing is retained, the entire fee to the department. The department shall issue a duplicate certificate of accomplishment to a person who is entitled to a duplicate certificate of accomplishment and who pays a fee of $2.75.

(bn) A certificate issued to a person under this subsection is valid for life unless revoked by a court under s. 30.80 (2m) or (6) (e) or 938.343 (5).

(c) A valid certificate issued by another state, as defined in s. 115.46 (2) (f), or a province of Canada that is held by a person will be honored if the course content substantially meets that established by the department.

(d) The department shall also prepare and disseminate information on water safety to the public, including the informational pamphlets specified in s. 30.52 (5) (a) 4. and (b) 3.

(2) UNIFORM NAVIGATION AIDS. (a) The department by rule shall establish uniform marking of the water areas of this state through the placement of aids to navigation and regulatory markers. These rules shall establish a marking system compatible with the system of aids to navigation prescribed by the U.S. coast guard and shall give due regard to the system of uniform waterway markers approved by the advisory panel of state officials to the merchant marine council, U.S. coast guard. No municipality or person may mark the waters of this state in any manner in conflict with the marking system prescribed by the department. Any regulatory marker or aid to navigation that does not comply with this marking system is considered an unlawful obstruction to navigable waters and may be removed in accordance with law. The department may not prohibit the placement of a regulatory marker or an aid to navigation if it complies with this marking system and if it is being placed pursuant to an ordinance that has been enacted in compliance with s. 30.77.

(b) For purposes of this section "aids to navigation" means buoys, beacons and other fixed objects in the water which are used to mark obstructions to navigation or to direct navigation through safe channels; "regulatory markers" means any anchored or fixed marker in the water or anchored platform on the surface of the water, other than aids to navigation, and shall include but not be limited to bathing beach markers, speed zone markers, information markers, mooring buoys, fishing buoys and restricted activity area markers.

(3) ENFORCEMENT. The department shall assist in the enforcement of ss. 30.50 to 30.80 and in connection therewith maintain patrol boats and operate such patrol boats at such times and places as the department deems necessary in the interest of boating safety and the effective enforcement of boating laws.

History: 1973 c. 302; 1983 a. 27 s. 2202 (38); 1995 a. 152; 1997 a. 198; 1999 a. 9; 2005 a. 356 ss. 1e, 10g, 10r; 2007 a. 20; 2009 a. 302.

Cross−reference: See also ss. NR 5.09 and 5.18, Wis. adm. code.

30.742 Water exhibitions and races; rules. For water exhibitions or races, the department may promulgate rules that provide exemptions from any of the requirements or restrictions under s. 30.61, 30.62, 30.65, 30.66, 30.678, 30.68 or 30.69.

History: 1991 a. 257; 2005 a. 356.

30.745 Limited jurisdiction for administration and enforcement of navigation aids by municipalities. (1) DEFINITIONS. As used in this section:

(a) "Adjacent outlying waters" means the outlying waters adjacent to the boundaries of a municipality and extending outward for a distance of one−half mile.

(b) "Municipality" means any town, village or city.

(2) EXERCISE OF LIMITED JURISDICTION. (a) *Authority to enact ordinances.* A municipality may enact by ordinance a navigation aids system and regulations affecting moorings, markers and buoys in adjacent outlying waters if the system and regulations are not in conflict with the uniform navigation aids system established by the department under s. 30.74 (2) or with any county ordinance.

(b) *Conflicts.* Any municipal ordinance enacted under this section which conflicts with the uniform navigation aids system established by the department under s. 30.74 (2) or with any county ordinance is void.

(c) *Administration and enforcement.* A municipality may exercise jurisdiction over adjacent outlying waters for the purpose of administering and enforcing an ordinance enacted under this section.

History: 1981 c. 222; 1983 a. 27 s. 2202 (38); 1997 a. 248.

30.75 Service of process on nonresident. (1) HOW SERVED. Service of process upon a nonresident defendant in any action claiming injury to person or property arising out of the operation of a boat in this state may be either by personal service within or without this state or by registered mail as provided in sub. (2).

(2) SERVICE BY REGISTERED MAIL. If service of process is to be by registered mail, the original and necessary copies of the summons shall be left with the clerk of circuit court in which the action is to be brought, together with a sum of 75 cents to cover the cost of mailing. The clerk of circuit court shall mail a copy to the defendant at the defendant's last address as known to the plaintiff or clerk of circuit court, with the return receipt signed by the addressee requested. Service of the summons is considered com-

2009−10 Wis. Stats. database updated and current through 2011 Wis. Act 39 and July 25, 2011. Statutory changes effective on or prior to 9−1−11 are printed as if currently in effect. Statutory changes effective after 9−1−11 are designated by NOTES. See Are The Statutes on this Website Official?

Electronic reproduction of 2009−10 Wis. Stats. database, current through 2011 Wis. Act 39 and July 25, 2011.

pleted when it is mailed. The clerk of circuit court shall enter upon the court record the date when the summons is mailed and the name of the person to whom mailed.

History: 1991 a. 316; 1995 a. 224.

30.77 Local regulation of boating. (1) LOCAL REGULATION PROHIBITED; EXCEPTIONS. Sections 30.50 to 30.71 shall be uniform in operation throughout the state. No municipality, public inland lake protection and rehabilitation district or town sanitary district may:

(a) Enact any ordinance or local regulation requiring local numbering, registration or licensing of boats or any ordinance or local regulation charging fees for inspection, except as provided in sub. (3) (e); or

(b) Except as provided in subs. (2) and (3), enact any ordinance or local regulation that in any manner excludes any boat from the free use of the waters of this state or that pertains to the use, operation or equipment of boats or which governs any activity regulated by ss. 30.50 to 30.71.

(2) ORDINANCES CONFORMING TO STATE LAW. Any municipality may enact ordinances which are in strict conformity with ss. 30.50 to 30.71 or rules of the department promulgated under those sections.

(3) ORDINANCES. (a) Any town, village or city may, in the interest of public health, safety or welfare, including the public's interest in preserving the state's natural resources, enact ordinances applicable on any waters of this state within its jurisdiction if the ordinances are not contrary to or inconsistent with this chapter and if the ordinances relate to the equipment, use or operation of boats or to any activity regulated by ss. 30.60 to 30.71.

(ac) Except as provided under s. 33.455 (3) (b), no ordinance that pertains to the equipment, use or operation of a boat on an inland lake is valid unless one of the following occurs:

1. All towns, villages and cities having jurisdiction over the lake have enacted an identical ordinance.

2. At least 50% of the towns, villages and cities having jurisdiction over the lake have enacted an identical ordinance and at least 60% of the footage of shoreline of the lake is within the boundaries of these towns, villages and cities.

(ae) If a town, village or city proposes to amend or repeal an ordinance that it enacted under par. (ac), and if the amendment or repeal will result in less than 50% of the towns, villages or cities with jurisdiction over the lake still having in effect the current ordinance or if the amendment or repeal will result in less than 60% of the footage of shoreline of the lake being within the boundaries of the towns, villages and cities with the current ordinance still in effect, the town, village or city proposing the amendment or repeal shall hold a hearing on the issue at least 30 days before the amendment or repeal will take effect and shall give notice as required under par. (aw) 2. If, after holding the hearing, the town, village or city amends or repeals the ordinance that it enacted under par. (ac), all of the identical ordinances are void.

(am) 1. A public inland lake protection and rehabilitation district may, in the interest of public health, safety or welfare, including the public's interest in preserving the state's natural resources, enact and enforce ordinances applicable to a lake entirely within its boundaries if one of the following occurs:

a. Each town, village and city having jurisdiction over the lake adopts a resolution authorizing the lake district to do so.

b. At least 50% of the towns, villages and cities having jurisdiction over the lake adopt resolutions authorizing the lake district to enact and enforce ordinances, and at least 60% of the footage of shoreline of the lake is within the boundaries of these towns, villages and cities.

1m. A town sanitary district may, in the interest of public health, safety or welfare, including the public's interest in preserving the state's natural resources, enact and enforce ordinances applicable to a lake if at least 60% of the footage of shoreline of the lake is within its boundaries, if no public inland lake protection and rehabilitation district has in effect any ordinances enacted under subd. 1. for the lake and if any one of the following occurs:

a. Each town, village and city having jurisdiction over the lake adopts a resolution authorizing the town sanitary district to do so.

b. At least 50% of the towns, villages and cities having jurisdiction over the lake adopt resolutions authorizing the town sanitary district to enact and enforce ordinances, and at least 60% of the footage of shoreline of the lake is within the boundaries of these towns, villages and cities.

2. An ordinance enacted under subd. 1. or 1m. may not be contrary to or inconsistent with this chapter and shall relate to the equipment, use or operation of boats or to an activity regulated by ss. 30.60 to 30.71.

3. If a public inland lake protection and rehabilitation district enacts an ordinance under this paragraph, the lake district ordinance supersedes all conflicting provisions of a town, village or city ordinance enacted under par. (a) that are applicable to the lake.

3m. If a town sanitary district enacts an ordinance under this paragraph, the town sanitary district ordinance supersedes all conflicting provisions of a town, village or city ordinance enacted under par. (a) that are applicable to the lake.

3r. If a public inland lake protection and rehabilitation district is created for an inland lake after a town sanitary district has enacted ordinances under subd. 1m. for the lake, any ordinances enacted by the public inland lake protection and rehabilitation district supersede all of the following:

a. Any conflicting provisions of a town, village or city ordinance enacted under par. (a) that are applicable to the lake.

b. Any conflicting provisions of a town sanitary district ordinance enacted under subd. 1m. that are applicable to the lake.

4. If a town, village or city proposes to rescind a resolution that it adopted under subd. 1. or 1m., and if the recision will result in less than 50% of the towns, villages or cities with jurisdiction over the lake still having in effect resolutions adopted under subd. 1. or 1m. or will result in less than 60% of the footage of shoreline of the lake being within the boundaries of the towns, villages and cities with resolutions still in effect, the town, village or city proposing to rescind the resolution shall hold a hearing on the recision at least 30 days before the recision will take effect and shall give notice as required under par. (aw) 2. If, after holding the hearing, the town, village or city rescinds the resolution that it adopted under subd. 1. or 1m., the public inland lake protection and rehabilitation district ordinances or the town sanitary district ordinances are void.

(aw) 1. If one or more towns, villages or cities propose to enact an ordinance for an inland lake under par. (ac) 2. or a public inland lake protection and rehabilitation district or town sanitary district proposes to enact an ordinance for an inland lake under par. (am) 1. b. or 1m. b., it shall hold a public hearing on the proposed ordinance at least 30 days before its enactment.

2. The town, village or city that has the most footage of shoreline of the lake within its boundaries and that is supporting the proposal shall publish a notice of the public hearing under subd. 1. or par. (ae) or (am) 4. at least 30 days before the date of the hearing in one or more newspapers likely to give notice of the hearing in all towns, villages or cities that have jurisdiction over the lake. The notice shall be a class 1 notice under ch. 985. The town, village or city publishing the notice shall send a copy of the notice at least 30 days before the date of the hearing to the department, each municipality having jurisdiction over the lake and each lake association for the lake.

(b) Any county may, in the interest of public health, safety or welfare, including the public's interest in preserving the state's natural resources, enact an ordinance applicable on any river or stream within its jurisdiction if the ordinance is not contrary to or inconsistent with this chapter, and if the ordinance relates to the equipment, use or operation of boats or to any activity regulated by ss. 30.60 to 30.71. If a county enacts an ordinance under this

2009−10 Wis. Stats. database updated and current through 2011 Wis. Act 39 and July 25, 2011. Statutory changes effective on or prior to 9−1−11 are printed as if currently in effect. Statutory changes effective after 9−1−11 are designated by NOTES. See Are The Statutes on this Website Official?

Electronic reproduction of 2009−10 Wis. Stats. database, current through 2011 Wis. Act 39 and July 25, 2011.

paragraph, the county ordinance supersedes all provisions of a town, village or city ordinance enacted under par. (a) that is inconsistent with the county ordinance.

(c) If any county operates any marina development adjacent to any waters of this state, the authority conferred upon any town, village or city under par. (a) shall exclusively vest in the county in respect to enactment of local ordinances that relate to the development, operation and use of the marina facility and its adjoining waters.

(cm) In enacting ordinances under par. (a), (am) or (b) for a given body of water, municipalities and public inland lake protection and rehabilitation districts shall take into account factors that include all of the following:

1. The type, size, shape and depth of the body of water and any features of special environmental significance that the body of water has.

2. The amount, type and speed of boating traffic on the body of water and boating safety and congestion.

3. The degree to which the boating traffic on the body of water affects other recreational uses and the public's health, safety and welfare, including the public's interest in preserving the state's natural resources.

(cr) The types of ordinances that may be enacted under par. (a), (am) or (b) include the following:

1. Restrictions on speed.

2. Restrictions on certain types of boating activities on all, or in specified parts, of the lake, river or stream.

3. Restrictions on certain types of boating activities during specified hours of the day or specified days of the week.

(d) Ordinances pertaining to the equipment, use or operation of boats on inland lakes shall be subject to advisory review by the department as provided under this paragraph. Proposed ordinances subject to review under this paragraph shall be submitted by the local town, village or city clerk or by the public inland lake protection and rehabilitation district or town sanitary district to the department at least 60 days prior to final action thereon by the town, village, city or district governing body. Advisory reports regarding town, village, city, lake district or town sanitary district ordinances that regulate the equipment, use or operation of boats on inland lakes shall be based on consideration of the effect of the ordinance on the state from the standpoint of uniformity and enforcement and the effect of the ordinance on an affected town, village, city, lake district or town sanitary district in view of pertinent local conditions. Advisory reports shall state in what regard such ordinances are considered consistent or inconsistent with this chapter as to public health, safety or welfare, including the public's interest in preserving the state's natural resources, and shall be accompanied by suggested changes, if any. No later than 20 days after receipt by the department of proposed ordinances, the department shall advise the town, village, city, lake district or town sanitary district in writing as to the results of its advisory review under this paragraph. The department shall address the results sent to a town, village or city to its clerk.

(dm) 1. In this paragraph:

a. "Boating organization" means a nonstock corporation organized under ch. 181 whose primary purpose is to promote boating activities.

b. "Local entity" means a city, village, town, county, qualified lake association, nonprofit conservation organization, as defined in s. 23.0955 (1), town sanitary district, public inland lake protection and rehabilitation district, or another local governmental unit, as defined in s. 66.0131 (1) (a), that is established for the purpose of lake management.

c. "Qualified lake association" means an association that meets the qualifications under s. 281.68 (3m) (a).

2. If the department or a local entity objects to an ordinance enacted under par. (a), (ac) 2. or (am) 1. b., on the grounds that all or a portion of the ordinance is contrary to or inconsistent with this chapter, the procedure under subd. 2r. shall apply.

2g. If a local entity or a boating organization objects to an ordinance enacted under par. (a) that applies to a river or stream, or to an ordinance enacted under par. (b), on the grounds that all or a portion of the ordinance is not necessary for public health, safety, welfare or the public's interest in preserving the state's natural resources, the procedure under subd. 2r. shall apply.

2r. a. Upon receipt of an objection under subd. 2. or 2g., the department shall order a hearing on the objection under ch. 227. The hearing shall be a contested case hearing, and the administrator of the division of hearings and appeals in the department of administration shall assign a hearing examiner to the hearing as provided in s. 227.43. Persons who are not parties to the contested case may present testimony and evidence at the hearing.

b. The hearing examiner shall issue an order on the objection within 90 days after the date on which the hearing is ordered under subd. 2r. a.

c. For an objection under subd. 2., if the hearing examiner determines that the ordinance or the portion of the ordinance is contrary to or inconsistent with this chapter, the hearing examiner shall issue an order declaring the ordinance or that portion of the ordinance void. For an objection under subd. 2g., if the hearing examiner determines that the ordinance or the portion of the ordinance is not necessary for public health, safety, welfare or the public's interest in preserving the state's natural resources, the hearing examiner shall issue an order declaring the ordinance or that portion of the ordinance void. An order issued under this subd. 2r. c. shall prohibit the enforcement of all or any portion of the ordinance declared to be void.

3. The procedure under this paragraph does not supersede any other legal right or procedure that a person has to contest an ordinance enacted under this section.

(e) Notwithstanding the prohibition in sub. (1) (b) against ordinances or local regulations that exclude any boat from the free use of the waters of the state:

1. A municipality, a public inland lake protection and rehabilitation district or a town sanitary district that has in effect an ordinance under par. (am) may charge boat operators reasonable fees for any of the following:

a. Use of a public boat launching facility that the municipality or lake district owns or operates.

b. The municipality's or district's costs for operating or maintaining a water safety patrol unit, as defined in s. 30.79 (1) (b) 2.

c. The municipality's or district's costs for providing other recreational boating services.

2. A town, village or city may enact ordinances to regulate the operation, equipment, use and inspection of those boats carrying passengers for hire that operate from a base within its jurisdiction and may charge reasonable fees for such inspection.

(4) PUBLICIZING ORDINANCES. All ordinances enacted under sub. (3) shall be prominently posted by the local authority which enacted them and, for ordinances enacted under sub. (3) (ac) 2., by all local authorities having jurisdiction over the lake, at all public access points within the local authority's jurisdiction and also shall be filed with the department.

History: 1973 c. 302; 1987 a. 99; 1989 a. 159, 324, 359; 1993 a. 167; 1995 a. 152, 349; 1997 a. 35; 1999 a. 9; 1999 a. 150 s. 672; 1999 a. 185; 2001 a. 16.

Cross−reference: See also ss. NR 1.91, 5.15, and 5.19, Wis. adm. code.

Sub. (3) is an exception to sub. (2). A local ordinance prohibiting the operation of a motorboat on a lake on Sunday will not be held invalid pending determination of whether it is in the interest of public health or safety. Menzer v. Elkhart Lake, 51 Wis. 2d 70, 186 N.W.2d 290 (1971).

A village was authorized under ss. 30.77 (3) and 61.34 (1) to enact an ordinance that granted exclusive temporary use of a portion of a lake for a public water exhibition. State v. Village of Lake Delton, 93 Wis. 2d 78, 286 N.W.2d 622 (Ct. App. 1979).

Reasonable fees under sub. (3) (e) 1. are discussed. Town of LaGrange v. Martin, 169 Wis. 2d 482, 485 N.W.2d 287 (Ct. App. 1992).

DNR authority to insure free access to the state's waters implicitly extends to the shore and public access facilities. Ordinances limiting nonresident parking at boating

Electronic reproduction of 2009−10 Wis. Stats. database, current through 2011 Wis. Act 39 and July 25, 2011.

facilities and prohibiting boat trailer parking on streets were invalid. State v. Town of Linn, 205 Wis. 2d 426, 556 N.W.2d 394 (Ct. App. 1996), 95−3242.

The delegation of authority to local governments to collect boater fees for miscellaneous "recreational boating services" under ss. 30.77 (3) (e) 1. c. and 33.475 is unconstitutional. 79 Atty. Gen. 185.

30.772 Placement and use of moorings; restrictions; permits. (1) AUTHORITY. The department is authorized to regulate the placement and use of moorings.

(2) RESTRICTIONS. No mooring may be placed or used in any navigable waters if:

(a) The mooring obstructs or interferes with public rights or interest in the navigable waters.

(b) The riparian owner does not give written permission for the placement and use of the mooring.

(c) The mooring or use of the mooring interferes with the rights of other riparian owners.

(d) The mooring or use of the mooring adversely affects critical or significant fish or wildlife habitat.

(e) The mooring anchor is placed more than 150 feet from the ordinary high−water mark, or more than 200 feet from the ordinary high−water mark if sub. (3) (a) 5. applies, unless one of the following occurs:

1. A permit is obtained from the appropriate municipality and approved by the department.

2. A permit is obtained from the department.

3. The mooring is properly within a designated mooring area.

(f) The placement or use of the mooring violates a condition or restriction on a permit issued under sub. (4) or violates department rules.

(3) MUNICIPAL REGULATION OF MOORINGS; MUNICIPAL PERMITS; PROCEDURE. (a) Subject to department approval, the governing body of a municipality with jurisdiction over navigable waters may, by ordinance, adopt local regulations relative to the placement and use of moorings, including but not limited to regulations governing:

1. The number of moorings for a specific distance of frontage or within a specific area.

2. The number of boats to be attached to any mooring.

3. The distance between moorings.

4. The safe distance of moored boats from any other moored boats, properly marked and established traffic lanes, properly marked swimming or bathing areas, or structures, including piers, rafts, docks and wharves.

5. The placement or use of moorings up to 200 feet from the ordinary high−water mark, subject to all of the requirements of this section and s. 30.773, if applicable.

(am) If the governing body of a municipality adopts an ordinance under par. (a) 5., any boat moored or anchored to a mooring placed within 200 feet of the ordinary high−water mark or within a designated mooring area is not required to be lighted, as provided in s. 30.61 (6) (a), regardless of whether the moored or anchored boat drifts beyond 200 feet from the ordinary high−water mark or outside of the designated mooring area, unless the local regulations require the boat to be so lighted.

(b) The regulations shall not conflict with the uniform navigation aids system established by the department under s. 30.74 (2) or any rules adopted by the department under s. 30.74 (2).

(c) A municipality shall submit local regulations proposed under this subsection to the department at least 30 days before the municipality votes to adopt the regulations. The department shall advise the municipality in writing of its approval or disapproval of each such regulation. No regulation disapproved by the department may be adopted by the municipality. Permits issued for moorings more than 150 feet from the ordinary high−water mark, or more than 200 feet from the ordinary high−water mark if par. (a) 5. applies, shall be submitted to the department for approval unless the permit is for a mooring within a designated mooring area.

(d) The governing body of a municipality may, by ordinance, require a permit authorizing the placement and use of moorings, subject to all of the following:

1. Mooring permits shall be issued only after the governing body, or a person designated by the governing body, determines that the mooring conforms to the provisions of this section and all applicable local regulations adopted under this section.

2. Except as provided under subd. 4., if a mooring permit is issued under this section, no subsequent permit may be required unless the mooring location is changed.

3. After a mooring permit is issued, the governing body of a municipality may revoke the mooring permit if the mooring subsequently violates any provision of this section or any local regulation adopted under this section.

4. The provisions and procedures of ch. 68 shall apply to the grant, denial or revocation of a mooring permit by a municipality.

(e) Any mooring, mooring anchor or mooring buoy which is placed or used in any navigable water in violation of this section or any local regulation adopted by a municipality under this subsection constitutes a public nuisance subject to s. 30.294. A municipality may, by ordinance, provide that any person who violates any local regulation adopted under this subsection is subject to a forfeiture not to exceed $50 for each such violation. The ordinance may also provide that each day during which the violation exists is a separate offense.

(f) In addition to, or as an alternative to, the penalties specified in par. (e), the governing body of a municipality may remove unlawful moorings as provided under and pursuant to the procedures of s. 30.13 (5m).

(4) DEPARTMENT PERMITS. The department may issue a permit authorizing the placement or use of a mooring beyond 150 feet from the ordinary high−water mark if the municipality does not have an established permit procedure, or more than 200 feet from the ordinary high−water mark if sub. (3) (a) 5. applies. The department may place conditions or restrictions on any permit issued under this subsection.

(5) EXCEPTION. The restrictions under this section do not apply to the fleeting of barges on the Mississippi River and its tributaries.

History: 1985 a. 243; 1987 a. 374; 1987 a. 399; 1999 a. 150 ss. 5, 672; 2001 a. 30 s. 97.

30.773 Designated mooring areas. (1) ESTABLISHMENT OF DESIGNATED MOORING AREAS. Subject to department approval, a municipality with jurisdiction over navigable waters may establish designated mooring areas as provided in this section.

(2) PROCEDURES. A municipality authorized to establish a bulkhead line under s. 30.11 may establish a designated mooring area in the same manner as it is authorized to establish the bulkhead line except that if the municipality created a board of harbor commissioners, the municipality is required to obtain the approval of that board in addition to the approval of the department.

(3) STANDARDS FOR APPROVAL. In addition to requiring compliance with standards and procedures under s. 30.11 and sub. (2), the department shall grant an approval for the establishment of a designated mooring area only if:

(a) The designated mooring area is more than 150 feet from the ordinary high−water mark.

(b) The establishment and operation of the mooring area does not materially obstruct navigation.

(c) The establishment and operation of the mooring area is not detrimental to public rights or interest in the waterway.

(d) The mooring area is not within and does not adversely affect a critical or significant fish or wildlife habitat area.

(e) The establishment and operation of the mooring area complies with all applicable zoning requirements.

(f) The riparian owners agree in writing to the establishment of the mooring area and the area is to be used by the riparian owners or by others with the written consent of the riparian owners.

2009−10 Wis. Stats. database updated and current through 2011 Wis. Act 39 and July 25, 2011. Statutory changes effective on or prior to 9−1−11 are printed as if currently in effect. Statutory changes effective after 9−1−11 are designated by NOTES. See Are The Statutes on this Website Official?

Electronic reproduction of 2009−10 Wis. Stats. database, current through 2011 Wis. Act 39 and July 25, 2011.

(g) Use of the mooring area is not unfairly restricted or used to assert exclusive privileges for use of the navigable waters.

(h) The mooring area is marked in a manner which notifies the public of the boundaries of the mooring area and assists in navigation near the mooring area. These markers shall be consistent with the uniform aids to navigation established under s. 30.74 (2).

(4) PERMITS AND REGULATIONS. (a) Department permits under s. 30.772 (4) or department approval of municipal permits under s. 30.772 (3) (c) are not required for moorings placed within a designated mooring area.

(b) A municipality may regulate the placement and use of moorings within designated mooring areas in the manner provided under s. 30.772 (3).

(5) EXCEPTION. The restrictions under this section do not apply to the fleeting of barges on the Mississippi River and its tributaries.

History: 1985 a. 243.

30.78 Local regulation of seaplanes. (1) CITY, VILLAGE AND TOWN ORDINANCES. Any city, village or town adjoining or surrounding any waters may, after public hearing, by ordinance:

(a) Prescribe reasonable safety regulations relating to the operation on the surface of such waters of any aircraft capable of landing on water.

(b) Prescribe the areas which may be used as a landing and take−off strip for the aircraft or prohibit the use of the waters altogether.

(c) Provide proper and reasonable penalties for the violation of any such ordinance.

(1g) LAKE DISTRICT ORDINANCES. (a) A public inland lake protection and rehabilitation district, after public hearing, may enact and enforce local ordinances applicable to a lake entirely within its boundaries if each town, village and city having jurisdiction on the lake adopts a resolution authorizing the lake district to do so.

(b) Ordinances authorized under par. (a) are limited to the type of ordinances authorized under sub. (1) (a) to (c).

(c) If any town, village or city having jurisdiction on the lake rescinds the resolution authorizing the public inland lake protection and rehabilitation district to enact and enforce ordinances under this paragraph, the lake district ordinances are void.

(1r) NOTICE TO DEPARTMENT OF TRANSPORTATION. The department of transportation shall receive timely notice of the public hearing required under subs. (1) and (1g) and shall have an opportunity to present testimony on the proposed ordinance. An ordinance under sub. (1) (b) or (1g) that regulates or restricts an area of surface waters for landing or take−off purposes shall be filed with the department of transportation.

(2) MARKING OF REGULATED OR RESTRICTED AREAS. Any ordinance that regulates or restricts an area of surface waters under sub. (1) or (1g) shall direct that the area be marked by standard marking devices.

(3) CONFLICTING ORDINANCES. (a) If a public inland lake protection and rehabilitation district enacts an ordinance under sub. (1g), the lake district ordinance supersedes all conflicting provisions of a town, village or city ordinance enacted under sub. (1) that are applicable to that lake.

(b) Any conflict in jurisdiction arising from the enactment of ordinances by 2 or more municipalities shall be resolved under s. 66.0105.

History: 1975 c. 269; 1989 a. 159; 1993 a. 167; 1999 a. 150 s. 672.

30.79 Local water safety patrols; state aids. (1) DEFINITIONS. In this section:

(a) "Local governmental unit" means a municipality, a public inland lake protection and rehabilitation district or a lake sanitary district.

(am) "State aid" means payment by the state to a local governmental unit for or toward the cost of the operation or maintenance of a water safety patrol unit.

(b) "Water safety patrol unit" means one of the following:

1. A unit within an existing municipal law enforcement agency or a separate municipal agency, created by a municipality or by a number of municipalities riparian to a single body of water for the purpose of enforcing ss. 30.50 to 30.80 and any rules promulgated and ordinances enacted under ss. 30.50 to 30.80 and for the purpose of conducting search and rescue operations.

2. A unit created by a public inland lake protection and rehabilitation district, by a lake sanitary district or by a number of local governmental units riparian to a single lake, at least one of which is a lake district or a lake sanitary district, for the purposes specified in subd. 1.

(2) STATE AID. In order to protect public rights in navigable waters and to promote public health, safety and welfare and the prudent and equitable use of the navigable waters of the state, a system of state aids for local enforcement of ss. 30.50 to 30.80 and ordinances enacted under ss. 30.50 to 30.80 and for conducting search and rescue operations is established.

(2m) RULES FOR ELIGIBILITY. (a) The department shall promulgate rules that restrict the costs eligible for state aid under this section. The rules shall establish the following:

1. A method for calculating the maximum number of hours spent on enforcement activities or on search and rescue operations by a water safety patrol unit that will be eligible for state aid.

2. The maximum number of crew members on a boat operated by a water safety patrol unit whose compensation will be eligible for state aid.

3. The types and location of navigable waters on which a water safety patrol unit may operate for the local governmental unit operating the water safety patrol unit to be eligible for state aid.

(b) In establishing the method of calculation under par. (a) 1., the department shall include the amount of boating activity and the size of the navigable water as factors to be used in making these calculations.

(c) In addition to the rules promulgated under par. (a) the department may promulgate rules that relate to making the operation or maintenance of a water safety patrol unit more cost−effective.

(3) ENFORCEMENT POWERS. Officers patrolling the waters as part of a water safety patrol unit may stop and board any boat for the purpose of enforcing ss. 30.50 to 30.80 or any rules promulgated or ordinances enacted under ss. 30.50 to 30.80 and for conducting search and rescue operations, if the officers have reasonable cause to believe there is a violation of the sections, rules or ordinances or the stopping and boarding of any boat is essential to conduct a search and rescue operation.

(4) JURISDICTION. Upon petition by any local governmental unit or group of local governmental units operating or intending to operate a water safety patrol unit, the department shall, if it finds that it is in the interest of efficient and effective enforcement to do so, by rule define the waters which may be patrolled by the unit, including waters lying within the territorial jurisdiction of some other town, village or city if the town, village or city consents to the patrol of its waters. Such consent is not required if the petitioner is a local governmental unit containing a population of 5,000 or more, bordering upon the waters to be affected by the rule in counties having a population of less than 500,000. Officers patrolling the waters as part of the water safety patrol unit shall have the powers of sheriff in enforcing ss. 30.50 to 30.80, or rules promulgated or ordinances enacted under ss. 30.50 to 30.80 and in conducting search and rescue operations, on any of the waters so defined, whether or not the waters are within the jurisdiction of the local governmental unit for other purposes.

2009−10 Wis. Stats. database updated and current through 2011 Wis. Act 39 and July 25, 2011. Statutory changes effective on or prior to 9−1−11 are printed as if currently in effect. Statutory changes effective after 9−1−11 are designated by NOTES. See Are The Statutes on this Website Official?

Electronic reproduction of 2009−10 Wis. Stats. database, current through 2011 Wis. Act 39 and July 25, 2011.

(5) PAYMENT OF AIDS. On or before January 31 of the year following the year in which a local governmental unit operated a water safety patrol unit, it shall file with the department on the forms prescribed by it a detailed statement of the costs incurred by the local governmental unit in the operation of the water safety patrol unit during the past calendar year and of the receipts resulting from fines or forfeitures imposed upon persons convicted of violations of ordinances enacted under s. 30.77. The department shall audit the statement and determine the net costs that are directly attributable to the operation and maintenance of the water safety patrol unit, including a reasonable amount for depreciation of equipment. In calculating the net costs, the department shall deduct any fines or forfeitures imposed on persons convicted of violations of ordinances under s. 30.77 and any costs that do not comply with the rules promulgated under sub. (2m). The department shall compute the state aids on the basis of 75% of these net costs and shall cause the aids to be paid on or before April 1 of the year in which the statements are filed. If the state aids payable to local governmental units exceed the moneys available for such purpose, the department shall prorate the payments. No local governmental unit may receive state aid amounting to more than 20% of the funds available.

History: 1973 c. 302; 1977 c. 29, 274; 1989 a. 31, 159, 359; 1995 a. 349.

Cross−reference: See also ch. NR 50, Wis. adm. code.

Water patrol officers in a county patrol have sheriff's powers when directly enforcing ss. 30.50 to 30.80. Deputization of such officers by the sheriff is not necessary but desirable. 65 Atty. Gen. 169.

30.80 Penalties. (1) Any person violating any provision of ss. 30.50 to 30.80 for which a penalty is not provided under subs. (2) to (6) shall forfeit not more than $50 for the first offense and shall forfeit not more than $100 upon conviction of the same offense a 2nd or subsequent time within one year.

(2) Any person violating s. 30.68 (2) shall be fined not more than $200 or imprisoned for not more than 6 months or both.

(2g) Any person violating any provision of s. 30.67 (1):

(a) Shall be fined not less than $300 nor more than $1,000 or imprisoned not more than 6 months or both if the accident did not involve death or injury to a person.

(b) Shall be fined not more than $10,000 or imprisoned for not more than 9 months or both if the accident involved injury to a person but the person did not suffer great bodily harm.

(c) Is guilty of a Class I felony if the accident involved injury to a person and the person suffered great bodily harm.

(d) Is guilty of a Class H felony if the accident involved death to a person.

(2m) Any person violating s. 30.678 or 30.68 shall be required to obtain a certificate of satisfactory completion of a safety course under s. 30.74 (1). If the person has a valid certificate at the time that the court imposes sentence under sub. (1) or (2), the court shall permanently revoke the certificate and order the person to obtain a certificate of satisfactory completion of a safety course under s. 30.74 (1).

(2r) Any person violating s. 30.67 (2) shall forfeit not more than $200.

(3) Any person violating s. 30.71 or any rule promulgated under that section shall forfeit not more than $100 for the first offense and shall forfeit not more than $200 upon conviction of the same offense a 2nd or subsequent time within one year.

(3m) Any person violating s. 30.547 (1), (3) or (4) is guilty of a Class H felony.

(4) Any person violating any provision of s. 30.72 or the rules promulgated under s. 30.72 shall forfeit not more than $100 for the first offense and shall forfeit not more than $200 upon conviction of the same offense a 2nd or subsequent time within one year.

(5) Any person violating s. 30.68 (8m) shall forfeit not more than $100. Each day during which such violation exists constitutes a separate offense.

(5m) Any person violating any provision of s. 30.07 (2) or (6) shall forfeit not more than $500 for the first offense and shall forfeit not more than $2,000 upon conviction of the same offense a 2nd or subsequent time within 3 years.

(6) (a) *Penalties related to prohibited operation of a motorboat; intoxicants; refusal.* 1. Except as provided under subds. 2. to 5., a person who violates s. 30.681 (1) (a) or (b), a local ordinance in conformity with s. 30.681 (1) (a) or (b) or the refusal law shall forfeit not less than $150 nor more than $300.

2. A person who violates s. 30.681 (1) (a) or (b), a local ordinance in conformity with s. 30.681 (1) (a) or (b) or the refusal law and who, within 5 years prior to the arrest for the current violation, was convicted one time previously under the intoxicated boating law or the refusal law shall be fined not less than $300 nor more than $1,000 and shall be imprisoned for not less than 5 days nor more than 6 months.

3. A person who violates s. 30.681 (1) (a) or (b), a local ordinance in conformity with s. 30.681 (1) (a) or (b) or the refusal law and who, within 5 years prior to the arrest for the current violation, was convicted 2 times previously under the intoxicated boating law or refusal law shall be fined not less than $600 nor more than $2,000 and shall be imprisoned for not less than 30 days nor more than one year in the county jail.

4. A person who violates s. 30.681 (1) (a) or (b), a local ordinance in conformity with s. 30.681 (1) (a) or (b) or the refusal law and who, within 5 years prior to the arrest for the current violation, was convicted 3 times previously under the intoxicated boating law or refusal law shall be fined not less than $600 nor more than $2,000 and shall be imprisoned for not less than 60 days nor more than one year in the county jail.

5. A person who violates s. 30.681 (1) (a) or (b), a local ordinance in conformity with s. 30.681 (1) (a) or (b) or the refusal law and who, within 5 years prior to the arrest for the current violation, was convicted 4 or more times previously under the intoxicated boating law or refusal law shall be fined not less than $600 nor more than $2,000 and shall be imprisoned for not less than 6 months nor more than one year in the county jail.

6. A person who violates s. 30.681 (1) (bn) or a local ordinance in conformity with s. 30.681 (1) (bn) shall forfeit $50.

(b) *Penalties related to causing injury; intoxicants.* A person who violates s. 30.681 (2) shall be fined not less than $300 nor more than $2,000 and may be imprisoned not less than 30 days nor more than one year in the county jail.

(c) *Calculation of previous convictions.* In determining the number of previous convictions under par. (a) 2.to 5., convictions arising out of the same incident or occurrence shall be counted as one previous conviction.

(d) *Alcohol, controlled substances or controlled substance analogs; examination.* In addition to any other penalty or order, a person who violates s. 30.681 (1) or (2) or 30.684 (5) or who violates s. 940.09 or 940.25 if the violation involves the operation of a motorboat, shall be ordered by the court to submit to and comply with an assessment by an approved public treatment facility for an examination of the person's use of alcohol, controlled substances or controlled substance analogs. Intentional failure to comply with an assessment ordered under this paragraph constitutes contempt of court, punishable under ch. 785.

(e) *Certificate of satisfactory completion of safety course.* In addition to any other penalty or order, a person who violates s. 30.681 (1) or (2) or 30.684 (5) or who violates s. 940.09 or 940.25 if the violation involves the operation of a motorboat, shall be ordered by the court to obtain a certificate of satisfactory completion of a safety course under s. 30.74 (1). If the person has a valid certificate at the time that the court imposes sentence, the court shall permanently revoke the certificate and order the person to

Electronic reproduction of 2009−10 Wis. Stats. database, current through 2011 Wis. Act 39 and July 25, 2011.

obtain a certificate of satisfactory completion of a safety course under s. 30.74 (1).

History: 1973 c. 302; 1975 c. 208, 365, 422; 1979 c. 296 ss. 1 to 3; 1985 a. 243, 331; 1985 a. 332 s. 251 (1); 1989 a. 31, 145; 1995 a. 448; 1997 a. 198, 283; 2001 a. 109; 2005 a. 356; 2009 a. 55.

30.81 Local regulations on icebound inland waters. (1) TOWN, VILLAGE AND CITY ORDINANCES. Any town, village or city, in the interest of public health or safety, may enact ordinances that are not inconsistent with this chapter, relative to the use or operation of boats and other craft, including snowmobiles and other motor vehicles, on icebound inland lakes, but an ordinance is not valid unless each town, village and city having jurisdiction over any portion of the lake has enacted an identical ordinance. When the identical ordinances have been enacted, the ordinance of any individual town, village or city is in effect on the entire lake.

(1m) LAKE DISTRICT ORDINANCES. (a) A public inland lake protection and rehabilitation district, in the interest of public health or safety, may enact and enforce ordinances applicable to a lake entirely within its boundaries if each town, village and city having jurisdiction on the lake adopts a resolution authorizing the lake district to do so.

(b) An ordinance enacted under par. (a) must be consistent with this chapter and must relate to the use or operation of boats and other craft, including snowmobiles and other motor vehicles, on icebound inland lakes.

(c) If a public inland lake protection and rehabilitation district enacts an ordinance under this subsection, the district ordinance supersedes all conflicting provisions of a town, village or city ordinance enacted under sub. (1) that are applicable to the lake.

(d) If a town, village or city having jurisdiction on the lake rescinds the resolution authorizing the public inland lake protection and rehabilitation district to enact and enforce ordinances under this paragraph, the lake district ordinances are void.

(2) COUNTY ORDINANCES. Any county, in the interest of public health or safety, may enact ordinances not inconsistent with this chapter, relative to the use or operation of boats and other craft, including snowmobiles and other motor vehicles, on any of the icebound inland waters over which it has jurisdiction, except inland icebound lakes that are regulated by valid local ordinances enacted pursuant to sub. (1) or (1m).

(3) LIABILITY OF LOCAL GOVERNMENT. All traffic on icebound, inland waters shall be at the risk of the traveler. An ordinance by any municipality or any public inland lake protection and rehabilitation district that is enacted under this section permitting traffic on icebound inland waters shall not render the municipality or lake district enacting the ordinance liable for any accident to those engaged in permitted traffic while the ordinance is in effect.

(4) ENFORCEMENT. A law enforcement officer of a town, village or city that is subject to an ordinance enacted under sub. (1) or (1m) has the powers of sheriff in enforcing the ordinance on any portion of the lake, whether or not that portion of the lake is within the jurisdiction of the town, village or city for other purposes.

History: 1989 a. 159; 1993 a. 167.

30.90 Public access to Lake Lions. (1) As long as Lake Lions in the town of Alban, Portage County, continues to be used as a recreational area for the physically handicapped, all of the following shall apply:

(a) Neither the county or town may provide, nor shall any subdivider be required or permitted to provide, public access to Lake Lions, if the public access will in any way interfere with the use of the lake as a recreational area for the physically handicapped.

(b) The department may stock Lake Lions with fish, any provision in ch. 29 to the contrary notwithstanding.

(2) The town board of the town of Alban shall have jurisdiction over Lake Lions and may enact and enforce any ordinances necessary to prevent any deterioration of the waters of Lake Lions or any nuisances that would adversely affect the health or safety of the people.

History: 2001 a. 103.

30.92 Recreational boating projects. (1) DEFINITIONS. In this section:

(a) "Commission" means the Wisconsin waterways commission established under s. 15.345 (1).

(b) "Governmental unit" means the department, a municipality, a lake sanitary district, a public inland lake protection and rehabilitation district organized under ch. 33, the Milwaukee River revitalization council, the Lower Wisconsin State Riverway board, or any other local governmental unit, as defined in s. 66.0131 (1) (a), that is established for the purpose of lake management.

(bg) "Great Lakes" means Lake Superior and Lake Michigan and includes Chequamegon Bay and Green Bay.

(bk) "Inland lake" means an inland water that is a lake.

(bn) "Inland water" has the meaning given in s. 29.001 (45).

(br) "Qualified lake association" means an association that meets the qualifications under s. 281.68 (3m) (a).

(c) "Recreational boating facilities" means places where the public has access to the water by means of breakwaters and other similar physical structures, either naturally or artificially constructed, that provide safety and convenience for operators of recreational boats. "Recreational boating facilities" includes harbors of refuge, public accesses, launching ramps and locks and facilities that provide access between waterways for operators of recreational boats.

(2) STUDIES. (a) The commission may cause to be conducted appropriate studies, including feasibility studies, and inventories to aid in assessing the need for recreational boating projects.

(b) Feasibility studies shall be used to determine whether the construction of recreational boating facilities is feasible from environmental, economic and engineering viewpoints. The commission may conduct feasibility studies or cooperate with other state agencies in conducting feasibility studies. Feasibility studies conducted by state agencies or private persons shall be reviewed by the commission to ensure that appropriate data have been collected and analyzed in detail to substantiate the recommendations made in the feasibility study.

(c) Feasibility studies may be conducted upon the request of the affected governmental unit or qualified lake association. Feasibility studies shall be of sufficient detail to allow affected governmental units or qualified lake associations to decide if a recreational boating facility construction project should be supported.

(d) The following factors shall be considered by the commission in assigning priorities for feasibility studies:

1. Estimated cost of the study.

2. Available funds.

3. Expression of support by the governmental unit or qualified lake association.

4. For a recreational boating facility, the distance of the site of the proposed facility from other recreational boating facilities.

5. Work previously completed.

(e) A decision by a governmental unit or a qualified lake association to support a recreational boating project feasibility study shall be made by a resolution indicating support for a more detailed inquiry into the engineering, environmental and economic feasibility of a project. Support of a recreational boating project feasibility study does not commit the affected governmental unit or qualified lake association to cost−sharing in the project.

(3) PROJECT PRIORITY LIST. (a) Only those proposed recreational boating projects found to be feasible and supported by the affected governmental unit or qualified lake association and approved by the commission shall be placed on a priority list by the commission. The department shall maintain the list of priority

Electronic reproduction of 2009−10 Wis. Stats. database, current through 2011 Wis. Act 39 and July 25, 2011.

projects. Annually, the department shall inform all affected governmental units, except itself, and all qualified lake associations of their positions on the priority list.

(b) The following factors shall be considered in establishing priorities for projects:

1. For a recreational boating facility, the distance of the site of the proposed facility from other recreational boating facilities.

2. Demand for safe recreational boating facilities.

3. Expression of support by the governmental unit or qualified lake association.

4. Existing recreational boating projects.

5. Projects underway.

6. Commitment of funds.

7. Location of the proposed project within the region identified in s. 25.29 (7) (a).

(4) AIDS. (a) The department shall develop and administer, with the approval of the commission, a financial assistance program for governmental units, including itself, and qualified lake associations for the construction and rehabilitation of capital improvements related to recreational boating facilities, for the improvement of locks and facilities which provide access between waterways and for the projects specified in par. (b) 8. No financial assistance under this section may be provided to the department other than for projects for access to inland lakes without a public access facility.

(b) The following standards shall apply to the state funding of all recreational boating projects:

1. To the greatest extent possible, state funds shall be used to match other funding sources. Other funding sources may include, but are not limited to, the federal land and water conservation fund, the U.S. army corps of engineers, U.S. economic development administration, general revenue sharing, gifts, grants and contributions and user fees.

2. a. The department may cost−share, with the approval of the commission, with a qualified lake association or an affected governmental unit, including itself, at a rate of up to 50% of any construction, acquisition, rehabilitation, feasibility study or other project costs or any combination of these costs, for the recreational boating project if the costs are the type that qualify for funding under this section.

b. The department, with the approval of the commission, may increase the maximum cost−share rate under subd. 2. a. from 50% to 80% if the commission determines that the recreational boating project is a project of statewide or regional significance.

c. The department may pay, with the approval of the commission, an additional 10% of the costs of a construction project if the municipality conducts a boating safety enforcement and education program approved by the department.

2m. The qualified lake association or governmental unit that cost−shares under subd. 2. may make its contribution in matching funds or in−kind contributions or both.

3. No more than 10% of the state funds available for recreational boating aids under this section may be expended for feasibility studies in one year. No more than 1% of the state funds available for recreational boating aids under this section may be expended for any one feasibility study in one year.

4. No funds may be used for the purchase of land or the construction of facilities commonly used to berth boats.

6. Forty percent of the state funds available for recreational boating aids under this section shall be expended for Great Lakes projects. Forty percent of the state funds available for recreational boating aids under this section shall be expended for inland water projects. The commission may designate recreational boating aids for locks and facilities that provide access between the Great Lakes and inland waters as aids expended for inland waters, as aids expended for projects deemed necessary by the commission without regard to location or as aids under a combination of these 2 types of projects. Twenty percent of the state funds available for recreational boating aids under this section shall be expended for projects deemed necessary by the commission without regard to location.

6m. Notwithstanding subd. 6., the department, with the approval of the commission, may reallocate for expenditure for recreational boating aids without complying with the percentages under subd. 6. any state funds that are not encumbered for expenditure for a fiscal year before the first day of the 4th quarter of that fiscal year.

7. Projects qualifying for funds available for recreational boating aids under this section include, but are not limited to, construction, rehabilitation and improvement of harbors of refuge on the Great Lakes; accommodation of motor−powered recreational watercraft; construction, rehabilitation and improvement of public access and related facilities on inland waters where motor−powered recreational watercraft are permitted; and improvement of locks and facilities that provide access between waterways for the operators of recreational watercraft.

8. In addition to those projects specified under subd. 7., the following projects qualify for funds available for recreational boating aids under this section:

a. A project for the dredging of a channel in a waterway to the degree that is necessary to accommodate recreational watercraft.

am. A project that uses chemicals to remove Eurasian water milfoil.

b. Acquisition of capital equipment that is necessary to cut and remove aquatic plants that are detrimental to fish habitat if the acquisition is pursuant to a plan to cut and remove aquatic plants that is approved by the department.

bn. Acquisition of capital equipment that is necessary to collect and remove floating trash and debris from a waterway.

bp. Acquisition of capital equipment that is necessary to control and remove invasive aquatic plants, as defined in s. 23.24 (1) (g), if the equipment will be used to control and remove them as authorized by an aquatic plant management permit issued under s. 23.24 (3).

c. Acquisition of aids to navigation, as defined in s. 30.74 (2) (b).

d. Acquisition of regulatory markers, as defined in s. 30.74 (2) (b).

9. A governmental unit or a qualified lake association may not receive funds under subd. 8. a. for the same waterway more than once every 10 years.

10. Funds for a project under subd. 8. b. for capital equipment that will be used on the Great Lakes may only be expended from the 40% allocation of state funds that is available for Great Lake projects under subd. 6.

11. Not more than $75,000 in each fiscal year may be expended for projects under subd. 8. am.

(4r) CHAIR FACTORY DAM. Of the amounts appropriated under s. 20.370 (5) (cq), and before applying the percentages under sub. (4) (b) 6., the department shall expend the amount that is necessary for the renovation and repair or the removal of the Chair Factory Dam in Grafton, but the amount shall not exceed $264,000. Notwithstanding sub. (1) (c), the dam project specified under this subsection is a recreational boating facility for the purpose of expending moneys under this section. This project need not be placed on the priority list under sub. (3) (a).

(4t) LINNIE LAC DAM. Of the amounts appropriated under s. 20.370 (5) (cq) and before applying the percentages under sub. (4) (b) 6., the department shall provide to the Linnie Lac Management District the amount that is necessary for the repair, removal or reconstruction of the Linnie Lac Dam, but the amount shall not exceed $250,000. The Linnie Lac Management District need not assume ownership of the Linnie Lac Dam and, notwithstanding sub. (4) (b) 2., the Linnie Lac Management District need not contribute any moneys to match the amount expended from the appropriation under s. 20.370 (5) (cq). Notwithstanding sub. (1) (c), the

2009−10 Wis. Stats. database updated and current through 2011 Wis. Act 39 and July 25, 2011. Statutory changes effective on or prior to 9−1−11 are printed as if currently in effect. Statutory changes effective after 9−1−11 are designated by NOTES. See Are The Statutes on this Website Official?

Electronic reproduction of 2009−10 Wis. Stats. database, current through 2011 Wis. Act 39 and July 25, 2011.

dam project specified under this subsection is a recreational boating facility for the purpose of expending moneys under this section. This project need not be placed on the priority list under sub. (3) (a).

(5) RULES. (a) The commission shall recommend rules for promulgation by the department as necessary to implement this section. The commission shall recommend rules relating to the type and content of studies to be conducted, cost−sharing arrangements under sub. (4) and liaison arrangements between the state and federal agencies, other state agencies, governmental units, qualified lake associations and other persons.

(b) For purposes of sub. (4) (b) 2. b., the department shall promulgate rules to be used to determine whether a recreational boating project is a recreational boating project of statewide or regional significance.

(6) COOPERATION AND ASSISTANCE. (a) The department shall provide governmental units and qualified lake associations with technical assistance in all phases of implementing or participating in the program under this section. The department shall also coordinate the program under this section with all other related state and federal programs.

(b) The department shall assign staff to the commission for management of the program under this section. All staff activities, including but not limited to budgeting, program coordination and related administrative management functions, shall be consistent with the policies of the department and the natural resources board.

History: 1977 c. 274; 1979 c. 34 s. 2102 (39) (a); 1979 c. 154, 221; 1981 c. 20; 1983 a. 27 ss. 870, 2202 (38); 1985 a. 29, 332; 1989 a. 31, 160; 1991 a. 39, 269; 1995 a. 8, 27, 349; 1997 a. 27 ss. 1144q, 1144r, 1144s, 1145, 1146, 1146d, 1146g, 1146h, 5503g; 1997 a. 79, 248; 1999 a. 9; 1999 a. 150 s. 672; 2001 a. 16; 2003 a. 33; 2005 a. 25.

Cross−reference: See also ch. NR 7, Wis. adm. code.

30.99 Parties to a violation. (1) Whoever is concerned in the commission of a violation of this chapter for which a forfeiture is imposed is a principal and may be charged with and convicted of the violation although he or she did not directly commit it and although the person who directly committed it has not been convicted of the violation.

(2) A person is concerned in the commission of the violation if the person:

(a) Directly commits the violation;

(b) Aids and abets the commission of it; or

(c) Is a party to a conspiracy with another to commit it or advises, hires or counsels or otherwise procures another to commit it.

History: 1975 c. 365.

2009−10 Wis. Stats. database updated and current through 2011 Wis. Act 39 and July 25, 2011. Statutory changes effective on or prior to 9−1−11 are printed as if currently in effect. Statutory changes effective after 9−1−11 are designated by NOTES. See Are The Statutes on this Website Official?

Electronic reproduction of 2009−10 Wis. Stats. database, current through 2011 Wis. Act 39 and July 25, 2011.

CHAPTER 31

REGULATION OF DAMS AND BRIDGES AFFECTING NAVIGABLE WATERS

31.01 Definitions.
31.02 Powers and duties of department.
31.03 Permits for the Lower Wisconsin State Riverway.
31.04 Permits for dams.
31.045 Permits for dams that affect drained lands.
31.05 Applications for permits to construct.
31.06 Hearing.
31.07 Applications for permits to operate and maintain existing dams.
31.08 Hearing.
31.09 Proposals to accompany applications.
31.095 Water power permits, condition precedent.
31.10 Permit not to be valued.
31.11 Certificate of terms and forfeiture of permits.
31.12 Map, profile and plans.
31.13 Raising or enlarging existing dams.
31.14 Proof of ability to maintain dams required.
31.18 Obligations of owners of bridges and dams.
31.185 Permits to abandon dams.
31.187 Abandoned dams.
31.19 Inspection of dams; orders.
31.21 Transfer of permit.
31.23 Forfeitures; private bridges and dams.
31.25 Nuisances, abatement.
31.253 Dam removal; opportunity for hearing.
31.26 Civil liabilities.
31.29 May employ hydraulic engineer and assistants.
31.30 Dams on Brule River.
31.305 Dams in the Lower Wisconsin State Riverway.
31.307 Dam on Milwaukee River.
31.309 Portage levee system and canal.
31.31 Dams on nonnavigable streams.
31.32 Dams not to injure other dams or sites.
31.33 Jurisdiction of department.
31.34 Flow of water regulated.
31.35 Dams in areas leased by county; restrictions; control by circuit judge; when.
31.36 Levee commissioners.
31.38 Municipal authority to construct and maintain dams.
31.385 Dam safety; aid program.
31.387 Dam rehabilitation projects.
31.39 Fees for permits, approvals and hearings.
31.99 Parties to a violation.

31.01 Definitions. Terms used in this chapter are defined as follows:

(1) "Corporation" means a private corporation organized under the laws of this state.

(2) "Department" means the department of natural resources.

(3) "Grantee" means the person, firm, corporation or municipality to whom a permit is granted, and all subsequent owners of the grant.

(4) "Municipality" means any town, village, city or county in the state.

(5) "Navigable waters" means all waters declared navigable by ch. 30.

(6) "Permit", unless the context otherwise requires, means legislative permission granted under s. 31.06 to construct, operate and maintain a dam in or across navigable waters, or under s. 31.08 to continue the operation and maintenance of any dam so situated which was constructed before such legislative permits were required.

History: 1983 a. 189.

31.02 Powers and duties of department. (1) The department, in the interest of public rights in navigable waters or to promote safety and protect life, health and property may regulate and control the level and flow of water in all navigable waters and may erect, or may order and require bench marks to be erected, upon which shall be designated the maximum level of water that may be impounded and the lowest level of water that may be maintained by any dam heretofore or hereafter constructed and maintained and which will affect the level and flow of navigable waters; and may by order fix a level for any body of navigable water below which the same shall not be lowered except as provided in this chapter; and shall establish and maintain gauging stations upon the various navigable waters of the state and shall take other steps necessary to determine and record the characteristics of such waters.

(2) The department may investigate and determine all reasonable methods of construction, operation, maintenance, and equipment for any dam so as to conserve and protect all public rights in navigable waters and so as to protect life, health and property; and the construction, operation, maintenance and equipment, or any or all thereof, of dams in navigable waters shall be subject to the supervision of the department and to the orders and regulations of the department made or promulgated under this chapter.

(3) The department or any member or any agent or employee thereof shall at all times be accorded free access to any and all parts of any dam and appurtenances constructed or maintained in navigable waters and may enter upon any property to investigate a waterway or use of water from any lake or stream.

(4) The department may order and require any dam heretofore or hereafter constructed to be equipped and operated, in whole or part, as follows:

(a) With slides and chutes for the passage of logs and timber products.

(b) With a lock, boat hoist, marine railway or other device of a size and construction sufficient to accommodate navigation.

(c) With good and sufficient fishways or fish ladders, or in lieu thereof the owner may be permitted to enter into an agreement with the department to pay for or to supply to the state of Wisconsin annually such quantities of game fish for stocking purposes as may be agreed upon by the owner and the department.

(d) With spillways or flood gates capable of permitting the passage through or over the same of freshets and floods during all seasons of the year.

(e) With booms, piers or other protection works ample to safeguard flood gates from trash or other floating material.

(4g) The department may not impose the requirement under sub. (4) (c) on an owner of a dam unless all of the following apply:

(a) The rules promulgated under sub. (4r) are in effect.

(b) The federal government or the state implements a program to provide cost−sharing grants to owners of dams for equipping dams with fishways or fish ladders and a grant is available to the dam owner under the program.

(4r) The department shall promulgate rules specifying the rights held by the public in navigable waters that are dammed. The rules shall include provisions on the rights held by the public that affect the placement of fishways or fish ladders in navigable waters that are dammed.

(5) The department shall give written notice to the public service commission of any hearing under this chapter involving public utilities.

Electronic reproduction of 2009−10 Wis. Stats. database, current through 2011 Wis. Act 39 and July 25, 2011.

(6) Except as provided in sub. (7m), the department may operate, repair and maintain the dams and dikes constructed across drainage ditches and streams in drainage districts, in the interest of drainage control, water conservation, irrigation, conservation, pisciculture and to provide areas suitable for the nesting and breeding of aquatic wild bird life and the propagation of fur−bearing animals.

(7) The department shall confer with the drainage commissioners in each drainage district on the formation of policies for the operation and maintenance of the dams; in districts having no commissioners, the department shall confer in like manner with the committee appointed by the county board, if any, to represent either such drainage district, or in the event that the drainage district is dissolved, to represent the interests of the county in all matters whatsoever pertaining to water conservation and control within the area which theretofore constituted such drainage district. This subsection does not apply to the Duck Creek Drainage District.

(7m) The drainage board for the Duck Creek Drainage District shall operate, repair and maintain dams, dikes and other structures in district drains that the board operates in the Duck Creek Drainage District in compliance with ch. 88 and any rules promulgated by the department of agriculture, trade and consumer protection under ch. 88. If a county drainage board fails to perform its duties under this subsection, the department of natural resources may exercise its authority under subs. (6), (8) and (9).

(8) The department shall give careful consideration to the suggestions of the drainage commissioners or committee of the county board, but the final decision in all matters under consideration shall rest with the department.

(9) So far as seems practicable, the department may designate or employ the drainage commissioners of any drainage district, or the committee of the county board above referred to, to operate the dams in such district or area formerly comprising a drainage district or perform services in the repair and maintenance of the dams, dykes and other works.

History: 1999 a. 9; 2001 a. 105; 2007 a. 96.

Cross−reference: See also chs. NR 333 and 353, Wis. adm. code.

Ordering a riparian owner to excavate and maintain a ditch to regulate lake levels was an unconstitutional taking of property. Otte v. DNR, 142 Wis. 2d 222, 418 N.W.2d 16 (Ct. App. 1987).

Artificial lakes and land subdivisions. Kusler, 1971 WLR 369.

31.03 Permits for the Lower Wisconsin State Riverway. For activities in the Lower Wisconsin State Riverway, as defined in s. 30.40 (15), no person obtaining a permit under this chapter may start or engage in the activity for which the permit was issued unless the person obtains any permit that is required for the activity under s. 30.44 or 30.445.

History: 1989 a. 31, 359.

31.04 Permits for dams. Permits to construct, operate and maintain dams may be granted to persons, corporations or municipalities under this chapter.

31.045 Permits for dams that affect drained lands. (1) For the construction, raising or enlarging of a dam that will affect the water level in a drainage district organized under ch. 88, no person who obtains a permit under this chapter may construct, raise or enlarge the dam unless the person obtains the approval of the drainage board with jurisdiction of the drainage district.

(2) For the construction, raising or enlarging of a dam that will affect the water level in a drain, for an individual landowner, that is constructed under an order issued under s. 88.94, no person who obtains a permit under this chapter may construct, raise or enlarge the dam unless the person obtains the approval of the landowner.

History: 1993 a. 456.

31.05 Applications for permits to construct. Any person, firm, corporation or municipality desiring a permit to construct, operate and maintain a dam shall file with the department a written application therefor, setting forth:

(1) The name of the navigable waters in or across which a dam is proposed to be constructed and a specific description of the site for the proposed dam.

(2) The purpose or purposes for which the proposed dam is to be constructed, operated and maintained.

(3) In case the application is for a permit to construct, operate and maintain a dam for a private purpose, proof satisfactory to the department that the applicant owns or has an enforceable option to purchase the described dam site and at least 65% of the land to be flowed, or the flowage rights on at least 65% of such land. This subsection shall not apply to a person who has the power of eminent domain.

(4) A general description of the proposed dam, of the material to be used in the construction thereof, and a general description of all booms, piers, and other protection works to be constructed in connection therewith.

(5) The approximate amount of hydraulic power that the proposed dam is capable of developing.

(6) The name of the city, village or town in which the site of the proposed dam will be located and the name of the nearest existing dam above and below the site of the proposed dam.

(7) A map on the scale of not less than one inch per 1,000 feet showing the lands that may be affected by the construction, operation or maintenance of the proposed dam, or by any flowage that may be caused thereby and approximately the outline of such flowage, which map shall indicate the ownership of each tract of land within the flowage.

(8) Such additional information of any nature that may be required by the department.

History: 1975 c. 349; 1993 a. 246.

31.06 Hearing. (1) Upon receipt of an application for a permit under s. 31.05 the department may order a hearing or it may mail a notice that it will proceed on the application without public hearing unless a request for a public hearing is filed as provided in this section. The notice shall be mailed to the clerk of each municipality directly affected by the proposed dam. The department may give further or other notice as it considers proper. The department shall mail a copy of the notice to the applicant who shall cause the notice to be published in each county in which affected riparian lands are located as a class 1 notice, under ch. 985. If a hearing is not requested in writing within 30 days after mailing of the notice, the department may waive the hearing.

(2) (a) If a hearing is ordered, the department shall, not less than 10 days before such hearing, mail written notice thereof to each person notified under sub. (1).

(b) The department shall require the applicant to publish a class 1 notice under ch. 985, of the hearing in each county in which affected riparian lands are located, and may require the applicant to mail such other notices as it deems necessary. Proof of publication and proof of mailing under this subsection and sub. (1) shall be filed with the department.

(3) (a) At a hearing under this section, or any adjournment of the hearing, the department shall consider the application and take evidence offered by the applicant and other persons supporting or opposing the proposed dam. The department may require the amendment of the application.

(b) If it appears that the construction, operation or maintenance of the proposed dam is in the public interest, considering ecological, aesthetic, economic and recreational values, the department shall so find and grant a permit to the applicant, provided the department also finds that the applicant has complied with s. 31.14 (2) or (3) and, where applicable, with s. 31.05 (3), based on the department's own estimate of the area of the flowage.

(c) 1. The enjoyment of natural scenic beauty and environmental quality are declared to be public rights to be considered along with other public rights and the economic need of electric power for the full development of agricultural and industrial activity and other useful purposes in the area to be served. In consider-

Electronic reproduction of 2009−10 Wis. Stats. database, current through 2011 Wis. Act 39 and July 25, 2011.

ing public rights to the recreational use and natural scenic beauty of the river, the department shall investigate the potentialities of the lake and lakeshore created by the flowage and shall weigh the recreational use and scenic beauty of the lake and lakeshore against the known recreational use and scenic beauty of the river in its natural state. The department shall further weigh the known recreational use and scenic beauty of the particular section of river involved against the known recreational use and scenic beauty of other sections of the same river and other rivers in the area remaining in their natural state without regard to plans of other dams subsequently filed or to be filed.

2. The department shall deny the permit if it finds any of the following:

a. It appears that the river in its natural state offers greater recreational facilities and scenic value for a larger number of people than can by proper control of the flowage level be obtained from the use of the lake and lakeshore and that the remaining sections of the river and other rivers in the area in their natural state provide an insufficient amount of recreational facilities and scenic beauty, and it further appears that the economic need of electric power is less than the value of the recreational and scenic beauty advantages of the river in its natural state.

b. The permit will cause environmental pollution, as defined in s. 299.01 (4).

(4) Not more than 20 days after receiving notice as provided in sub. (1) each county clerk may and upon request of the chairperson of the county board shall give written notice as provided in s. 59.11 (2) of a special meeting of the county board to be held at a time and place set by the county clerk, not less than 2 weeks nor more than 3 weeks after mailing of such notice, for the purpose of making findings as hereinafter provided. The county clerk shall give notice of the time, place and purpose of such special meeting to the department and to the applicant, who shall cause the same to be published in the county, as a class 2 notice, under ch. 985, and the applicant shall cause a copy thereof to be mailed at least 7 days prior to such special meeting to every person interested in any lands that will be affected by the proposed dam and whose post−office address can by due diligence be ascertained. Proof of such publication and notice shall be filed with the county clerk. At such special meeting the county board shall hear evidence offered by the applicant and other persons and shall find and determine by a majority vote of the county board members−elect whether the lake and lake shore created by the flowage or the river in its natural state offers greater recreational facilities and scenic beauty value for the larger number of people. The county clerk shall forthwith certify such finding and determination to the department. The jurisdiction and findings of each county board shall apply to that part of the proposed dam and flowage which is within the county.

(5) If a hearing on the application for a permit is conducted as a part of a hearing under s. 293.43, the notice and hearing provisions in that section supersede the notice and hearing provisions of this section.

History: 1971 c. 273; 1973 c. 90; 1979 c. 34 s. 2102 (39) (g); 1979 c. 221; 1983 a. 192; 1995 a. 201, 227; 1999 a. 83.

Cross−reference: See also ch. NR 305, Wis. adm. code.

31.07 Applications for permits to operate and maintain existing dams. Any person, firm, corporation or municipality desiring a permit to operate and maintain a dam constructed in or across navigable waters without legislative permission prior to July 10, 1915, shall file with the department a written application therefor setting forth:

(1) The name of the navigable waters in or across which such dam was constructed and a specific description of the dam site.

(2) The year in which the construction of the dam was completed, and a detailed description of the dam and equipment, including the maximum height or head of water that may be maintained thereby and the kind and character of material of which the dam is constructed.

(3) The purpose for which the dam was theretofore operated and is operated at the time application hereunder is made, and the purpose for which it is proposed to operate and maintain the dam.

(4) The approximate amount of hydraulic power developed thereby.

(5) The name of the city, village or town in which the dam site is located and the name of the nearest existing dam above and below the dam site.

(6) Such additional information of any nature whatsoever as may be required by the department.

History: 1993 a. 246.

31.08 Hearing. Upon receipt of an application under s. 31.07 procedure shall be had substantially as required by s. 31.06, and if the department finds that such operation and maintenance does not materially obstruct existing navigation or violate other public rights and will not endanger life, health or property, a permit is hereby granted to the applicant, provided the department also finds that the applicant has complied with s. 31.14 (2) or (3).

Cross−reference: See also ch. NR 305, Wis. adm. code.

31.09 Proposals to accompany applications. Each applicant for a permit to construct, operate and maintain a dam for the purpose of developing power or for the purpose of aiding in the development of power by other dams through the creation of reservoirs or otherwise, and each applicant for a permit to construct, operate and maintain a dam for any other purpose whatsoever, which is capable of developing 50 theoretical horsepower or more available for 50% of the time throughout the year, shall file with an application for a permit, in addition to the requirements of s. 31.05 or s. 31.07, as the case may be, the following proposals:

(1) That the department prior to the time the permit is granted shall value the dam site and all flowage rights and other property necessary for the purposes set forth in the application for the permit, whether the same or any part thereof are owned by the applicant or not.

(2) That the department shall audit all outlays for property and for the construction of the dam, buildings, and other structures and works constructed, maintained, and operated and used and useful under the permit.

(3) That the permit, if granted, shall be granted and accepted subject to the express condition that the state of Wisconsin, if it shall have the constitutional power, or any municipality, on not less than one year's notice, at any time after the expiration of 30 years after the permit becomes effective, may acquire all of the property of the grantee, used and useful under the permit, by paying therefor, the cost of reproduction in their then existing condition of all dams, works, buildings, or other structures or equipment, used and useful under the permit, as determined by the department, and by paying in addition thereto the value of the dam site and all flowage rights and other property as determined by the department prior to the time the permit was granted, as provided in sub. (1), plus the amounts paid out for additional flowage rights, if any, acquired after the valuation made by the department as provided in sub. (1); and that the applicant waives all right to any further compensation.

History: 1991 a. 316.

31.095 Water power permits, condition precedent. (1) Except where the stream to be improved forms a boundary line between this and another state, no permit shall be granted or transferred in accordance with this chapter until the applicant has filed with both the department and the public service commission, in addition to all other things required by law to be filed, an agreement setting forth:

Electronic reproduction of 2009−10 Wis. Stats. database, current through 2011 Wis. Act 39 and July 25, 2011.

(a) That, in the event any electric energy generated under said permit shall be transmitted or conveyed beyond the confines of this state to be there sold, the applicant will furnish to any resident of this state or any corporation domiciled therein electric energy at reasonable rates to be determined by the commission, provided that the commission after public hearing shall find that public convenience and necessity require such service.

(b) That the rate as determined by the commission shall in no event exceed the rate charged by applicant for similar service supplied under like conditions for the energy so transmitted outside the state.

(2) The commission may hold hearings, fix rates and do all things necessary and convenient to carry out the purposes of sub. (1).

31.10 Permit not to be valued. Each and every permit is granted, and shall be conclusively deemed to be accepted, subject to the condition that no element of value whatever shall ever attach to or be allowed for such permit in and of itself in the sale or acquisition of the property used and useful under such permit or otherwise.

31.11 Certificate of terms and forfeiture of permits. The department shall issue to every grantee of a permit a certificate evidencing a grant of the permit allowed by law. Every permit, and every franchise heretofore granted by the legislature, to construct, maintain and operate a dam shall become null and void, unless the dam thereby authorized be completed within 5 years from the time when the permit or the franchise was granted; but the department, for good cause, may extend such time for a period not exceeding 2 years.

31.12 Map, profile and plans. (1) The grantee of a permit under s. 31.06, to construct, maintain and operate a dam, before commencing any work of construction authorized by the permit, shall submit to the department a complete map and profile on the scale of not less than one inch per 1,000 feet showing the land that may be affected by the construction and maintenance of the dam, or by any flowage that may be caused thereby, and the outline of the flowage, and such other hydrographic and topographic data as the department may prescribe, and shall also file complete detailed plans and specifications for the proposed dam, including all booms, piers, or other protection works.

(2) The department shall examine the map, profile, plans and specifications; shall hear the grantee thereon and may reject the same or any part thereof, if unsatisfactory or incomplete, or may suggest and require modifications thereof. If the map, profile and plans and specifications are satisfactory and complete, or, if the same shall be modified as suggested and required, the department shall so find and approve the same, and thereupon the grantee may construct the proposed dam in accordance therewith, but the department may, at any time during the construction of any dam and in the interest of the public safety, or of any public rights in navigable waters, authorize, order or require such changes in the plans and specifications and the construction of the dam as shall be necessary.

(3) If the department, in the case of an application for a permit to construct a dam with a capacity of less than 250 hydraulic horsepower at ordinary stage of water, shall find that the information and data furnished in the original or amended application is sufficient, the applicant shall not be required to furnish the additional or more detailed information or data specified in subs. (1) and (2). The department may, however, at any time during the construction of any such dam authorize, order or require changes in the construction or the method or plan of construction thereof, as provided in sub. (2).

(4) Within 10 days after the completion of any dam the grantee shall file with the department a verified statement that the same was constructed in accordance with the plans and specifications approved by the department; or in case no plans and specifications were required to be filed, then that the dam was constructed in accordance with the description contained in the application.

Cross−reference: See also ch. NR 353 and s. NR 335.11, Wis. adm. code.

31.13 Raising or enlarging existing dams. (1) If the owner of any existing dam wishes to raise or enlarge the same, the owner may apply to the department for permission so to do, but the permission granted under this section shall be in amendment of any existing franchise, license, or permit previously granted authorizing the construction or maintenance of such dam only to the extent of giving the right so to raise or enlarge such dam, and shall in no way enlarge, alter, abridge or nullify property rights, privileges or obligations as to such dam, or the maintenance or operation thereof theretofore acquired or incurred. In addition to the requirements of s. 31.05 (1), (6) and (7), the owner's application shall state:

(a) The year in which the dam was completed.

(b) If constructed by legislative permission, a statement of the act of the legislature authorizing the same.

(c) A detailed description of the dam, including the maximum height or head of water that may be maintained thereby and the kind and character of material of which the same is constructed.

(d) The purpose for which such dam has been and is now used and the purpose for which it is proposed to use the same.

(e) The approximate amount of hydraulic power developed thereby.

(f) Such additional information of any nature whatsoever as the department may require.

(2) Upon receipt of an application under this section procedure shall be had substantially as required by s. 31.06; and if the department finds that the dam, raised or enlarged or rebuilt, or rebuilt, enlarged and raised in accordance with the application, will not materially obstruct existing navigation or violate other public rights, and will not endanger life, health or property, and that the applicant has complied with s. 31.14 (2) or (3), permission is hereby granted to raise or enlarge or rebuild, or rebuild, enlarge and raise the same in accordance with the application.

History: 1991 a. 316.

Cross−reference: See also ch. NR 305, Wis. adm. code.

31.14 Proof of ability to maintain dams required. (1) It is the policy of this section to preserve public rights in navigable waters, including those created by dams, and to provide a means of maintaining dams and the developments which have been made adjacent to the flowage of such dams.

(2) Except as provided in sub. (3), a permit shall not be granted under s. 31.06, 31.08 or 31.13:

(a) Unless the applicant furnishes to the department proof of ability to operate and maintain the dam in good condition, either by the creation of a special assessment district under ss. 31.38 and 66.0703, or by any other means which in the department's judgment will give reasonable assurance that the dam will be maintained for a reasonable period of time not less than 10 years; or

(b) If a majority of the municipalities in which 51% or more of the dam or flowage is or will be located files with the department, prior to the granting of the permit, their objections to the granting of such permit in the form of resolutions duly adopted by the governing bodies of such municipalities.

(3) Subsection (2) does not apply if the applicant complies with each of the following requirements:

(a) Furnishes proof satisfactory to the department that the applicant owns or has an enforceable option to purchase all the land which is or will be flowed by the impoundment, together with the shoreline and an immediately adjacent strip of land at least 60 feet in width, but the department may in a particular case permit a narrower strip where the 60−foot minimum is impractical and may, in furtherance of the policy stated in sub. (1), require ownership of a wider strip.

(b) Files with the department a writing in such form as the department requires in which the applicant agrees that following

Electronic reproduction of 2009−10 Wis. Stats. database, current through 2011 Wis. Act 39 and July 25, 2011.

the initial filling of the proposed pond the applicant will not convey the dam to another without first obtaining department approval. The department may require from an applicant who does not have the power of eminent domain a bond or other reasonable assurances that the applicant will adhere to such agreement.

(c) Furnishes proof satisfactory to the department that the applicant has dedicated or will dedicate a parcel of land for public access to the impounded waters.

(4) No person may assume ownership of a dam after October 21, 1961, or the ownership of that specific piece of land on which a dam is physically located after April 27, 1982, without first complying with sub. (2) or (3). The transfer of the ownership of a dam or the ownership of a specific piece of land on which a dam is physically located made without complying with sub. (2) or (3) is void unless a permit to abandon the dam was granted under s. 31.185 or unless the transfer occurred by operation of law. Every person who accepts ownership by operation of law is subject to this chapter.

(5) For the purpose of implementing the policy stated in sub. (1), the department may by rule require all or specified classes of persons operating a dam for profit to create a fund or reserve to be used for major repairs, reconstruction or removal of the dam when necessary. Such rules shall prescribe the manner in which such fund or reserve is to be created, maintained and expended. This subsection shall not apply to a person who has the power of eminent domain.

History: 1981 c. 246; 1991 a. 316; 1999 a. 150 s. 672.

This section does not apply to cranberry dams. Tenpas v. DNR, 148 Wis. 2d 579, 436 N.W.2d 297 (1989).

31.18 Obligations of owners of bridges and dams. **(1)** The grantee of any permit, the owner of any dam constructed before permits were required by law, and the owner of any bridge at the city of Portage or at any point above that city, over the Wisconsin River, shall maintain and operate all such dams, slides, chutes, piers, booms, guide booms, weirs, tunnels, races, flumes, sluices, pits, fishways, locks, boat hoists, marine railways and all other equipment required by the department for the protection of public rights in such waters, and for the preservation of life, health and property, in good repair and condition, and shall not willfully, or otherwise, injure, remove or destroy the same, or any part thereof, unless the department shall have approved such removal or destruction in writing. In the event of emergency the department shall have power, pending investigation and hearing, to order the repair of any dam without notice and hearing.

(2) The owner of any such dam shall open such slide or chute for the passage of any craft or material lawfully navigating the stream, whenever requested so to do by the person in charge of such navigation, without charge or toll therefor. But such owner shall be under no obligation to otherwise aid passage through the slide or chute.

(3) Except when emergency shall require the same for the protection of life, health or property, no substantial alteration or addition shall be made to any dam heretofore or hereafter constructed without obtaining an order therefor from the department, which order may be issued only after an investigation and upon a finding that the proposed alterations or additions will not impair the sufficiency of such dam or any existing public rights in such waters.

(4) The department shall in the interest of public rights in navigable waters, or to promote safety and protect life, health and property, require the grantee of any permit, under this chapter, or of any permit or authorization heretofore provided for by legislative enactment, prior to flowing any lands by the construction of a dam thereunder, to remove from such lands all or any portion of the standing and fallen timber and all or any portion of the brush. Provided that in cases where the application for permit proposes construction of a dam for water reservoir or water storage purposes, and not for the purpose of operating a hydroelectric generating plant, the nature, extent and time for such removal shall be determined prior to the granting of a permit, except that subsequent to the granting of a permit the department may make such modification in the removal requirements as may be in the public interest and which will not materially alter the economics of the project; and in making such original determination or any modification thereof the economic need for the project shall be considered.

Cross−reference: See also ch. NR 305, Wis. adm. code.

31.185 Permits to abandon dams. **(1)** No owner of any dam may abandon or remove or alter the dam without first obtaining a permit from the department. No person may transfer ownership of a dam or the ownership of the specific piece of land on which a dam is physically located without first obtaining a permit from the department.

(2) An application for a permit to abandon, remove or alter a dam or an application for a permit to transfer ownership of a dam or the ownership of a specific piece of land on which a dam is physically located shall be made to the department upon forms prescribed by it and shall contain the owner's name and address, a brief description of the dam and its location and other information as the department requires for the purpose of enabling it to act on the application.

(3) Section 31.06 governs procedure upon all applications hereunder.

(4) Prior to the hearing the department shall have its staff make its own investigation of the dam and, on the basis of such investigation, shall make recommendations as to the type of requirements, if any, which it would impose on the applicant under sub. (5) as a condition to granting the permit. Such recommendations shall be presented at the hearing. If no one registers opposition to the application at the hearing, the department shall grant the permit, subject to such conditions as it deems necessary under sub. (5). If someone registers opposition to the abandonment at the hearing and such opposition is not withdrawn, the department shall defer action on the application for a period of 120 days after the hearing. Within a reasonable time after the expiration of such period, the department shall deny the permit, or grant the permit, subject to such conditions as it imposes under sub. (5), unless, within such 120−day period, one or more municipalities or other persons or associations have agreed to acquire ownership of the dam and have furnished satisfactory proof of intent to comply with s. 31.14 (2) or (3).

(5) As a prerequisite to the granting of a permit under this section, the department may require the applicant to comply with such conditions as it deems reasonably necessary in the particular case to preserve public rights in navigable waters, to promote safety, and to protect life, health and property.

History: 1973 c. 90; 1981 c. 246.

Cross−reference: See also ch. NR 305, Wis. adm. code.

Sub. (5) is not directed to the removal of a dam by the DNR. It creates a different procedure for a private party who seeks to remove a dam. Froebel v. DNR, 217 Wis. 2d 652, 579 N.W.2d 774 (Ct. App. 1998), 97−0844.

31.187 Abandoned dams. **(1)** The department may remove or cause to be removed, in such manner as it deems fit, old and abandoned dams in streams in this state, upon giving 60 days' notice in writing to the owner thereof, if the owner can be found. If the owner of the dam is unknown or cannot, by due diligence, be found, the department shall publish a class 3 notice, under ch. 985, in the county in which the dam is situated.

(2) Whenever the department determines that the conservation of any species or variety of wild animals will be promoted thereby, the department may maintain and repair any dam located wholly upon lands the title to which is in the state either as proprietor or in trust for the people after giving due consideration to fixing the level and regulating the flow of the public waters.

History: 1983 a. 27 s. 687; Stats. 1983 s. 31.187; 1991 a. 316.

2009−10 Wis. Stats. database updated and current through 2011 Wis. Act 39 and July 25, 2011. Statutory changes effective on or prior to 9−1−11 are printed as if currently in effect. Statutory changes effective after 9−1−11 are designated by NOTES. See Are The Statutes on this Website Official?

Electronic reproduction of 2009−10 Wis. Stats. database, current through 2011 Wis. Act 39 and July 25, 2011.

This section, and not s. 31.185 or 283.31, governs removal of a dam by the DNR. There is no statutory authority to grant injunctive relief against the DNR when it causes damages during a dam removal. Froebel v. DNR, 217 Wis. 2d 652, 579 N.W.2d 774 (Ct. App. 1998), 97−0844.

31.19 Inspection of dams; orders. (1g) DEFINITIONS. In this section:

(a) "High hazard dam" means a large dam the failure of which would probably cause loss of human life.

(b) "Low hazard dam" means a large dam the failure of which would probably not cause significant property damage or loss of human life.

(c) "Significant hazard dam" means a large dam the failure of which would probably cause significant property damage but would probably not cause loss of human life.

(1m) DETERMINATION OF DAM SIZE. For the purposes of this section, a dam is considered to be a large dam if either of the following applies:

(a) It has a structural height of 25 feet or more and impounds more than 15 acre−feet of water.

(b) It has a structural height of more than 6 feet and impounds 50 acre−feet or more of water.

(2) LARGE DAM INSPECTION. (a) *Inspection by the department.* At least once every 10 years the department shall conduct a detailed inspection of each high hazard dam and each significant hazard dam.

(ag) *Owner responsibility.* 1. Owners of each high hazard dam, each significant hazard dam, and each low hazard dam shall engage a professional engineer registered under s. 443.04 to inspect the dam as specified in this paragraph.

2. An owner of a high hazard dam shall cause the dam to be inspected at least 4 times between each inspection conducted by the department under par. (a). An owner of a significant hazard dam shall cause the dam to be inspected at least 2 times between each inspection conducted by the department under par. (a). An owner of a low hazard dam shall cause the dam to be inspected at least once every 10 years.

3. The owner of a dam required to be inspected under this paragraph shall submit to the department, no later than 90 days after the date of the inspection, a report of the results of the inspection. The report shall include information on any deficiencies in the dam, recommendations for addressing those deficiencies, and recommendations on improving the safety and structural integrity of the dam.

(ar) *Dam classification.* The department shall classify each dam in this state as a high hazard, significant hazard, or low hazard dam for the purpose of this section.

(b) *Exemption for federally inspected dams.* Notwithstanding the inspection requirements under pars. (a) and (ag), an inspection under par. (a) or (ag) is not required if the dam is inspected periodically by or under the supervision of a federal agency in a manner which is acceptable to the department and if the results of each inspection are made available to the department.

(3) INSPECTION UPON COMPLAINT. If the department receives a complaint in writing from the mayor of a city, supervisor of a town or the president or trustee of a village which alleges that a dam maintained or operated in or across any navigable or nonnavigable waters or a reservoir is in an unsafe condition or if the department receives a complaint in writing from a person which alleges that the person's property or any property under the person's control is endangered by a dam or reservoir, the department shall investigate or cause an investigation to be made of the complaint.

(4) DISCRETIONARY INSPECTION. The department may inspect or cause an inspection to be made of any dam or reservoir.

(5) ORDER; REDUCTION IN WATER LEVEL. If the department finds pursuant to an investigation that a dam or reservoir is not sufficiently strong or is unsafe and that the dam or reservoir is dangerous to life or property, it shall determine what alterations, additions or repairs are necessary and shall order the owner or person having control of the dam or reservoir to cause those alterations, additions or repairs to be made within a time specified in the order. If the department finds pursuant to an investigation that a dam or reservoir is not sufficiently strong or is unsafe and that the dam or reservoir is dangerous to life or property, it may cause to be drawn off, in whole or in part, the water in the reservoir or impounded by the dam if it determines that this action is necessary to prevent impending danger to persons or property.

History: 1975 c. 349, 421; 1983 a. 27; 1989 a. 31; 2009 a. 28.
Cross−reference: See also ch. NR 333, Wis. adm. code.

31.21 Transfer of permit. (1) No transfer or assignment of any permit granted under s. 31.06 or 31.08 shall be of any effect whatsoever unless it is in writing and a certified copy thereof within 10 days after the execution thereof, is filed with the department and unless such transfer or assignment is approved in writing by the department; and no such transfer or assignment shall be approved by the department except after an investigation and a finding that the transfer or assignment is not made or intended to be made for a purpose or to create a condition prohibited by s. 196.665 and that the transferee or assignee has complied with s. 31.14 (2) or (3). No permit shall be transferred or assigned to a foreign corporation, nor shall any permit granted to a municipality be assigned or transferred to any person, otherwise than as security for a loan made in good faith and concurrently with and as consideration for such transfer or assignment, and no foreign corporation shall have power to acquire title to any such permit, nor shall any person have power to acquire title to a permit granted to or acquired by a municipality, otherwise than in the enforcement of such security, and in no case shall any such foreign corporation hold title to or operate under any such permit for a period longer than 3 years.

(2) No municipality shall make or execute any lease or other contract with any person, firm, or corporation for the sale or use of hydraulic or hydroelectric power developed or generated by such municipality under a permit granted under s. 31.06 or 31.08 for a period longer than 10 years, unless the same shall be first approved by the department, after investigation and upon a finding that such lease or contract will not impair or interfere with the purpose or uses for which such dam was acquired or constructed by the municipality.

Cross−reference: See also ch. NR 305, Wis. adm. code.

31.23 Forfeitures; private bridges and dams. (1) Every person who constructs or maintains in navigable waters or aids in the construction or maintenance therein of any bridge or dam not authorized by law, shall forfeit for each such offense, and for each day that the free navigation of such waters are obstructed by such bridge or dam a sum not exceeding $50.

(2) Every person or corporation violating any of the provisions of this chapter, other than those mentioned in sub. (1), or violating any order made by the department pursuant to this chapter, shall forfeit for each such violation not more than $1,000.

(3) (a) There shall be no forfeiture under this section in any case where a bridge is built by a private citizen across any navigable waters having a width of 35 feet or more, providing such bridge does not impair the rights of the public for purposes of navigation or fishing.

(b) No such bridge shall be maintained unless its construction shall first be approved by the department after public hearing and on not less than 10 days' written notice to the applicant and to the county and town clerks of the county and town wherein all or a portion of the proposed bridge is to be located.

(c) Each applicant who shall apply to the department for a permit to construct any such bridge shall state in the application the proposed location of the bridge, the depth of the water to be spanned, the materials to be used in the construction of the bridge, the plans of the proposed bridge, together with such other facts as the department may require.

Electronic reproduction of 2009−10 Wis. Stats. database, current through 2011 Wis. Act 39 and July 25, 2011.

(d) Every such bridge used by the public shall at all times be maintained in a safe condition by the owners of the land abutting the approaches of the bridge, and the owners shall make such repairs as are reasonably necessary therefor. The town shall not become liable for any damages resulting from the insufficiency or want of repairs of such bridge. If the department upon inspection finds that such bridge is in need of repairs, it shall notify the owners responsible for the repairs thereof, and also send a copy of such notice to the town board, to make all repairs as are reasonably necessary therefor. If such repair work as ordered by the department is not commenced within 60 days after receipt of such notice, the department may close such bridge until it is so repaired. Whenever any owner responsible for such bridge shall fail to repair or maintain the bridge in a good and safe condition, after having been notified so to do by the department for 60 days after such notification, such town board upon its own initiative may make such required repairs on such bridge, and the cost thereof shall be paid by the owners responsible therefor, and the town clerk shall enter such amount of the cost of repairs upon the next tax roll of the town.

History: 1991 a. 316.

Cross−reference: See also chs. NR 301, 305, and 320, Wis. adm. code.

Sub. (1) provides no substantive rule for which a violation would initiate the abatement procedures under s. 31.25. The remedy provided is limited to the forfeiture provided under sub. (1). Capt. Soma Boat Line, Inc. v. Wisconsin Dells, 56 Wis. 2d 838, 203 N.W.2d 369 (1973).

31.25 Nuisances, abatement. Every dam, bridge or other obstruction constructed or maintained in or over any navigable waters of this state in violation of this chapter, and every dam not furnished with a slide, chute or other equipment prescribed by the department, is hereby declared to be a public nuisance, and the construction thereof may be enjoined and the maintenance thereof may be abated by action at the suit of the state or any citizen thereof.

Section 31.23 (1) provides no substantive rule for which a violation would initiate the abatement procedures under this section. Capt. Soma Boat Line, Inc. v. Wisconsin Dells, 56 Wis. 2d 838, 203 N.W.2d 369 (1973).

31.253 Dam removal; opportunity for hearing. (1) OPPORTUNITY FOR HEARING PRIOR TO DEPARTMENT ACTION. Except as provided under sub. (4), prior to seeking or causing the removal of a dam under this chapter, the department shall hold a public informational hearing on the proposed removal or publish a class 2 notice under ch. 985 stating that it will seek or cause the removal of the dam without holding a public informational hearing unless a hearing is requested in writing within 30 days after the last publication of the notice. The department may hold further hearings or give further notice as it deems appropriate.

(2) OPPORTUNITY FOR HEARING PRIOR TO COURT ACTION. Except as provided under sub. (4), a court may not order or authorize the removal of a dam in an enforcement action under this chapter unless a public informational hearing or an opportunity for a public informational hearing was provided.

(3) PUBLIC INFORMATIONAL HEARING. If the department conducts a public informational hearing under this section, the department shall explain the basis for its decision to seek or cause the removal of the dam, the procedures which will be followed and opportunities for citizen involvement in those procedures and the department shall provide an opportunity for citizens to present comments, testimony and evidence concerning the removal of the dam. Notwithstanding s. 227.42, this hearing may not be converted or treated as a contested case.

(4) EXCEPTIONS. (a) This section does not apply if the department or a court determines that a dam constitutes an immediate and significant hazard to persons or property.

(b) This section does not apply to an application under s. 31.185 or departmental action under s. 31.185.

History: 1983 a. 507; 1985 a. 182 s. 57.

31.26 Civil liabilities. (1) The owner of any dam or of any privately owned bridge across the Wisconsin River or the Black River or any of their tributaries shall be liable for all damages occasioned to property by a failure to provide such dam or bridge with slides, booms and chutes as required by s. 31.18 (1). The person or party suffering any such damage shall have a lien upon the dam and all mills, machinery and appurtenances of such owner erected thereon, or served with water thereby, and on the lands adjoining, not exceeding 40 acres; or, as the case may be, a lien upon such bridge and its approaches.

(2) The claimant of such lien shall file a notice thereof in writing in the office of the clerk of the circuit court of the county in which the dam or bridge is located within 60 days after sustaining such damages and shall commence an action to enforce the lien within 6 months after filing such notice. Such lien shall accrue upon the filing of such notice and failure to file the same or to commence such action within the times specified therefor respectively shall operate as a waiver of the lien. Judgment for the plaintiff for the recovery of damages and declaring such lien may be enforced by an execution sale of the property affected as in ordinary actions at law, and upon such sale all rights to maintain such dam or bridge shall pass to the purchaser.

(3) In case of any personal injury by reason of any such neglect or failure the damages sustained thereby may be recovered and a lien and judgment enforced in like manner; and if death results an action may be maintained by the representatives of the deceased in the manner provided in other cases of death resulting from negligence or wrong.

(4) No common law liability, and no statutory liability provided elsewhere in these statutes, for damage resulting from or growing out of the construction, maintenance or operation of any dam is released, superseded, or in any manner affected by the provisions of this chapter; and this chapter creates no liability on the part of the state for any such damages.

31.29 May employ hydraulic engineer and assistants. The department may employ and fix the salaries of a competent hydraulic engineer and other assistants necessary to carry out the provisions of this chapter.

31.30 Dams on Brule River. It is declared to be the policy of the state to prohibit forever the building or maintaining of any dam or dams across the Brule River or any of its tributaries in Douglas County, except that a dam with an adequate fishway may be constructed across said Brule River at each of the 3 sites hereinafter described, or at such other sites as are selected by the department in place of any or all of the sites hereinafter mentioned, the purpose of which shall be to provide a method whereby fish declared to be undesirable for said stream by the department may be eliminated or prevented from ascending the stream, and to permit said stream to be developed for trout in different stretches thereof: site No. 1 known as Clevedon site in the southeast quarter of the northwest quarter of section 10, township 49 north, range 10 west; site No. 2 known as the Old Mill site in the northwest quarter of the southeast quarter, section 11, township 47 north, range 10 west; and site No. 3, known as the Upper or Rock dam site in the northeast quarter of the southeast quarter of section 22, township 47 north, range 10 west; and all rights, privileges, and franchises granted prior to June 26, 1905, to any person or corporation to improve said Brule River or any of its tributaries in said county for any purpose whatever, are repealed and annulled. No domestic corporation organized subsequent to such date shall exercise any of the powers or privileges authorized or conferred by ss. 180.15 to 180.18, 1925 stats., in, across or along said river or any of its tributaries in Douglas County.

Cross−reference: See s. 30.25 for similar prohibition of dams on the Wolf River.

31.305 Dams in the Lower Wisconsin State Riverway. No dam may be constructed in the lower Wisconsin River as defined in s. 30.40 (14).

History: 1989 a. 31.

Electronic reproduction of 2009−10 Wis. Stats. database, current through 2011 Wis. Act 39 and July 25, 2011.

31.307 Dam on Milwaukee River. (1) The department shall conduct, or shall cause to be conducted, an environmental and engineering study concerning the removal of the North Avenue dam in the city of Milwaukee from the Milwaukee River.

(3) Upon completion of the study under sub. (1), the city of Milwaukee may apply for a permit to abandon the dam under s. 31.185 or the department may proceed under ss. 31.187 and 31.253 to cause the removal of the dam.

(4) For purposes of s. 30.92 (4) (b) 6., moneys expended from the appropriation under s. 20.370 (5) (cq) for the study under sub. (1) shall be considered as amounts expended for projects considered necessary without regard to location.

History: 1991 a. 39; 1995 a. 27.

31.309 Portage levee system and canal. (1) CITY OF PORTAGE LEVEE. (a) The department shall provide a grant in the 1995−97 fiscal biennium from the appropriation under s. 20.370 (5) (cq) to the city of Portage for the amount necessary for the renovation and repair of the city of Portage levee in the Portage levee system. The grant under this paragraph may not exceed $800,000 in fiscal year 1995−96 and $800,000 in fiscal year 1996−97.

(ag) The department shall provide a grant of $350,000 in fiscal year 2001−2002 and a grant of $350,000 in fiscal year 2002−2003 from the appropriation under s. 20.370 (5) (cq) to the city of Portage for the renovation and repair of the Portage canal.

(am) The city of Portage may use any amounts from the grant awarded under par. (a) for the renovation and repair of the Portage canal.

(b) When the department determines that the renovation and repair described under par. (a) are complete, the city of Portage shall assume the maintenance of the city of Portage levee in the Portage levee system in a manner that will best protect the surrounding area from the overflow of the Wisconsin River.

(2) LEWISTON AND CALEDONIA LEVEES. (a) The department shall maintain the Lewiston and Caledonia levees in the Portage levee system in a manner that will best protect the surrounding area from the overflow of the Wisconsin River.

(b) The department may expend in fiscal year 1995−96, from the appropriation under s. 20.370 (5) (cq), up to $400,000 for a study concerning the future of strengthening and maintaining the Lewiston and Caledonia levees in the Portage levee system. The study shall include a management plan for these 2 levees.

History: 1995 a. 27 ss. 1698, 1699, 1702 to 1706; Stats. 1995 s. 31.309; 1999 a. 9; 2001 a. 16.

31.31 Dams on nonnavigable streams. Any person may erect and maintain upon that person's land, and, with the consent of the owner, upon the land of another, a water mill and a dam to raise water for working it upon and across any stream that is not navigable in fact for any purpose whatsoever upon the terms and conditions and subject to the regulations hereinafter expressed; and every municipality may exercise the same rights upon and across such streams that they may exercise upon or across streams navigable for any purpose whatsoever.

History: 1991 a. 316.

31.32 Dams not to injure other dams or sites. No such dam shall be erected to the injury of any mill lawfully existing, either above or below it on the same stream; nor to the injury of any mill site on the same stream on which a mill or milldam shall have been lawfully erected and used or is in the process of erection, unless the right to maintain a mill on such last−mentioned site shall have been lost or defeated by abandonment or otherwise; nor to the injury of any such mill site which has been occupied as such by the owner thereof, if such owner, within a reasonable time after commencing such occupation, completes and puts in operation a mill for the working of which the water of such stream shall be applied.

31.33 Jurisdiction of department. (1) DAMS HERETOFORE OR HEREAFTER CONSTRUCTED; ACTION FOR DAMAGES. All mills and milldams lawfully erected or constructed, on streams not navigable at the time, under chapter 48, territorial laws of 1840, chapter 62, laws of 1857, ch. 56, R.S. 1858, ch. 146, R.S. 1878, ch. 146, R.S. 1898, ch. 146, 1911 stats., ch. 146, 1913 stats., or ch. 146, 1915 stats., or any special, private or local act, or under any other act whatsoever, that are not now abandoned but are still in existence and use, and all dams heretofore or hereafter erected or constructed on streams not navigable in fact for any purpose, shall be subject to and regulated and controlled, so far as applicable, by ss. 31.02, 31.12, 31.18, 31.19, 31.25, 31.26 and 196.665, except that those sections do not prevent the owner of any land flooded or otherwise injured by any milldam from recovering by action at law, full compensation for all damages resulting to him or her in times past and that will result to him or her in the future in consequence of that flooding and injury but no damages suffered more than 3 years before the commencement of the action shall be recovered. The amount recovered constitutes a first lien upon the milldam and upon the mill, if any, and the lien may be enforced by execution sale of the property affected. In every such action the amount paid or secured to be paid under prior laws as damages shall be considered and proper allowance made therefor. The authority granted under this subsection to bring the action does not preclude the owner from proceeding under ch. 32. The owner may not exercise his or her option to bring the action after condemnation proceedings have been commenced against his or her property under ch. 32.

(2) LICENSE. A license is granted to each owner of any such milldam now in existence and use, and to each owner of any such milldam hereafter constructed, to maintain and use the same to operate mills or machinery, or for any other lawful private or public purpose, but subject, however, to the supervision of the department acting under ss. 31.02, 31.12, 31.18, 31.19, 31.25, 31.26 and 196.665. The right created by the license shall follow the title to the milldam and a conveyance of the latter shall transfer the right to the grantee.

(3) INTERPRETATION. Whenever ss. 31.02, 31.12, 31.18, 31.19, 31.25, 31.26 and 196.665 are applied to mills or milldams specified in sub. (1) every reference in any of them to a "permit" or to a "grantee" of a permit shall be regarded as referring respectively to a license granted by this section and to the owner of such a mill or milldam.

(4) HEIGHT. The height to which water may be raised by any such milldam and the length or period of time for which it may be kept up each year, may be restricted and regulated by the orders of the department.

(5) VIOLATION OF ORDERS, PENALTIES. Every person, firm or corporation violating any of the orders respecting any such mill or milldam made by the department shall forfeit for each such violation a sum not exceeding $500 which may be recovered by civil action as provided by ch. 778.

History: 1979 c. 32 s. 92 (8); 1981 c. 390; 1989 a. 31.

Cross−reference: See also ch. NR 333, Wis. adm. code.

This section applies to nonnavigable artificial waterways insofar as is necessary to protect navigable waters and owners of flooded waters. 63 Atty. Gen. 493.

Wisconsin's Milldam Act: Drawing New Lesson's From Old Law. Martini. 1998 WLR 1305.

31.34 Flow of water regulated. Each person, firm or corporation maintaining a dam on any navigable stream shall pass at all times at least 25% of the natural low flow of water of such stream, except as otherwise provided by law. This section, however, shall not apply to a plant or dam where the water is discharged directly into a lake, mill pond, storage pond or cranberry marsh, nor shall it apply to cases where in the opinion of the department such minimum discharge is not necessary for the protection of fish life. Any person, firm or corporation violating this section shall be fined not less than $50 nor more than $1,000.

31.35 Dams in areas leased by county; restrictions; control by circuit judge; when. (1) Dams controlling the water elevations in areas covered by leases made under s. 59.01 shall be operated in such manner as not to divert waters or with-

Electronic reproduction of 2009−10 Wis. Stats. database, current through 2011 Wis. Act 39 and July 25, 2011.

hold from any cranberry reservoir to the damage of any cranberry marsh now served or dependent upon such water supply or to any crops or works therein.

(2) The circuit court for the county where the leased lands are located shall, upon petition and proof that any cranberry marsh or crops or works thereon are endangered or likely to be damaged by the operation of any dam or water control, make a summary order for the release, impounding or control of the waters affected by the dam or dams, to be and remain in force until dissolved by due notice and hearing.

History: 1977 c. 449.

31.36 Levee commissioners. (1) The right−of−way for such levees, if any additional are found necessary, shall be furnished by the municipalities in which they are located, and no construction work shall be begun until such rights−of−way are provided.

(2) Whenever levee commissioners under either general or special act are charged with the expenditure of money appropriated by the state or by any municipality for the construction, extension, improvement or repair of any levee or breakwater along the shore or bank of a river, stream or lake, s. 31.38 shall apply for the purpose of acquisition and condemnation of lands for such purposes and such commissioners have all the powers conferred by s. 31.38 for these purposes. Condemnations shall comply with s. 66.0703, so far as applicable. Commissioners may procure by condemnation lands for right−of−way, earth material, borrow pits, quarry, timber and brush privileges as they may, in their judgment, deem necessary for such purposes.

(3) Whenever said levee commissioners are not vested with power to buy rights−of−way, earth material, borrow pits, quarry, timber and brush privileges from money appropriated by the state they may receive from any person or municipality donations of land and moneys to pay for lands and privileges condemned hereunder and for the expenses of such condemnation proceedings.

(14) This section does not modify or repeal s. 31.35.

History: 1993 a. 490; 1995 a. 27; 1999 a. 150 s. 672.

31.38 Municipal authority to construct and maintain dams. (1) Every municipality may, subject to this chapter, authorize the acquisition, construction, maintenance or repair of dams across any lake or stream adjoining or within the limits of such municipality, and may locate such dam within or without such limits.

(2) Whenever it is deemed necessary to acquire, construct, maintain or repair any such dam, a plan therefor, with specifications and cost estimates, shall be prepared and presented to the governing body of the municipality for adoption. Cost estimates may include the estimated cost of maintenance for a period of years. When adopted by the governing body, the plan shall, where required, be submitted to the department or proper officer of the United States for approval. No work shall be done in pursuance of such plan until it has been so approved.

(3) For the purpose of this section, a municipality may purchase or condemn lands within and, when necessary, without its limits in order to protect any property situated within such limits.

(4) The municipality shall proceed in accordance with s. 66.0703 to make special assessments to property on account of benefits resulting to the property from the improvement mentioned in sub. (2) or from the acquisition and maintenance of a dam. If the excess of benefits over damages accruing to property within the assessment district is not sufficient to pay the cost of the improvement, the municipality may pay the balance, either out of its general fund or out of any special fund created for that purpose. The municipality may issue its negotiable bonds, as provided in ch. 67, to pay for such improvement. The department upon request of a municipality shall assist in engineering, surveying and determination of charges necessary in establishing special assessment districts under this section, cost of which shall be advanced by the requesting municipality and later charged against the various parcels of the special assessment district in direct proportion to the assessed benefits of each parcel in the district.

(5) Whenever 2 or more municipalities propose to cooperate in acquiring, constructing, maintaining or repairing a dam, their governing bodies shall first meet and adopt a method of proceeding and a plan of apportioning to each its share of the entire cost. Such method of proceeding and plan of apportionment shall be embodied in a resolution adopted by the governing bodies of the cooperating municipalities acting jointly and later such resolution shall be adopted by each of the governing bodies acting separately.

(6) Whenever a county or town acts under this section, the references in s. 66.0703 to a city or village or clerk thereof mean the county or town or clerk thereof, as the case may be.

History: 1999 a. 150 s. 672.

31.385 Dam safety; aid program. (1b) In this section "dam safety project" means the maintenance, repair, modification, abandonment or removal of a dam to increase its safety or any other activity that will increase the safety of a dam.

(1m) The department shall promulgate the rules necessary to administer a financial assistance program for dam safety projects under which financial assistance shall be provided as follows:

(a) To municipalities and public inland lake protection and rehabilitation districts for any type of dam safety projects.

(b) To private owners for the removal of dams.

(c) To any persons for the removal of abandoned dams.

(2) The following standards shall apply to financial assistance under this section for dam safety projects:

(a) 1. Except as provided in subd. 2., financial assistance for a dam safety project is limited to the sum of the following:

a. No more than 50% of the first $400,000 of costs of the project.

b. No more than 25 percent of the costs of the project that exceed $400,000.

2. A project to remove a dam shall not be subject to the cost limits under subd. 1.

3. Financial assistance is limited to no more than $400,000 for each dam safety project.

(ag) Of the amounts appropriated under s. 20.866 (2) (tL) and (tx), at least $250,000 shall be used for projects to remove dams. A project to remove a dam may include restoring the stream or river that was dammed.

(ar) Of the amounts appropriated under s. 20.866 (2) (tL) and (tx), at least $100,000 shall be used for the removal of abandoned dams. The amounts required to be used under this paragraph are in addition to the amounts required to be used for the removal of dams under par. (ag).

(b) The department shall determine which projects shall receive funding priority.

(bm) The department may provide financial assistance for an activity other than the maintenance, repair, modification, abandonment or removal of the dam only if the cost of that activity will be less than the cost of the maintenance, repair, modification or removal of the dam.

(c) No financial assistance may be provided under this section for a dam safety project unless at least one of the following applies:

1. The department conducts an investigation or inspection of the dam under this chapter and the owner of the dam requests financial assistance under this section after having received department directives, based on the department's investigation or inspection of the dam, for the repair, modification or abandonment and removal of the dam or for another activity to increase the safety of the dam.

2. The municipality, public inland lake protection and rehabilitation district or other person applying for state financial assist-

Electronic reproduction of 2009−10 Wis. Stats. database, current through 2011 Wis. Act 39 and July 25, 2011.

ance under this section has received directives from the department or is under order by the department to maintain, repair, modify, abandon or remove a dam on August 9, 1989.

(d) The financial assistance that is provided under this section shall be paid from the appropriations under s. 20.866 (2) (tL) and (tx), except as provided in par. (dm) and in 1991 Wisconsin Act 39, section 9142 (10d).

(dm) Financial assistance that is provided under sub. (7) shall be paid from the appropriation under s. 20.866 (2) (ta) and shall be treated as moneys obligated from the subprogram under s. 23.0917 (3).

(3) The department shall provide municipalities, public inland lake protection and rehabilitation districts and other persons receiving state financial assistance under this section with technical assistance for dam safety projects under this section. The department shall coordinate the financial assistance program under this section with other related state and federal programs.

(4) (a) The department shall maintain an inventory of all dams in the state that require a dam safety project under this section. The inventory shall list the dam safety projects in the chronological order in which they are required to be undertaken. For each dam safety project on the inventory, the department shall include a statement of which parts of the dam safety project are required to protect the rights held by the public in the navigable waters contained by the dam.

(b) The department shall provide notice to the owner of a dam that is included in the inventory. The department shall by rule establish a notice and hearing process for a dam owner to object to the inclusion of the owner's dam on the list. The department shall use this notice and hearing each time a dam is included in the inventory. The process shall include a public hearing in the city, village or town in which the dam is located, a public comment period, and an appeals process.

(5) Notwithstanding the limitations under sub. (2) (a) and the funding allocation requirements under sub. (2) (ag) and (ar), the department shall provide financial assistance to the village of Cazenovia in the amount necessary for a dam safety project to repair a dam that is located in the portion of the village that is in Richland County. The amount of the financial assistance may not exceed $250,000. The village need not contribute to the repair costs, and sub. (2) (c) does not apply to this dam safety project. The repair of this dam need not be included as a dam safety project under the inventory maintained by the department under sub. (4) for the village to receive financial assistance under this section.

(6) (a) Notwithstanding the limitations under sub. (2) (a) and the funding allocation requirements under sub. (2) (ag) and (ar), the department shall provide financial assistance to all of the following:

1. Adams County for a dam safety project for Easton Dam in the amount necessary for the project, but not to exceed $150,000.

2. The city of Stanley for a dam safety project for Stanley Dam in the amount necessary for the project, but not to exceed $150,000.

3. The city of Montello for a dam safety project for Montello Dam, in the amount necessary for the project, but not to exceed $150,000.

4. Eau Claire County for dam safety projects for Lake Altoona Dam, for Lake Eau Claire Dam, and for a dam located in Coon Fork Lake County Park, in the amount necessary for the projects, but not to exceed $27,000.

(b) The counties and cities need not contribute to the costs of the dam safety projects under par. (a) 1. to 4., and sub. (2) (c) does not apply to these projects. The dam safety projects under par. (a) 1. to 4. need not be included as dam safety projects under the inventory maintained by the department under sub. (4) in order to receive financial assistance under this subsection.

(7) Notwithstanding the limitations under sub. (2) (a), and beginning with fiscal year 2011−12 and ending with fiscal year 2019−20, the department shall set aside from the appropriation under s. 20.866 (2) (ta) not less than a total of $6,000,000 that may be obligated only to provide financial assistance to counties for projects to maintain, repair, modify, abandon, or remove dams. To be eligible for financial assistance, a county must be under an order issued by the department to maintain, repair, modify, abandon, or remove a dam that is owned by the county and the order must be in effect on July 1, 2011. The amount of the financial assistance may not be for more than 25 percent of the costs of a project or $2,500,000, whichever is less. Subsection (2) (c) does not apply to a project for which financial assistance is provided under this subsection. A project need not be included under the inventory maintained by the department under sub. (4) in order for a county to receive financial assistance under this subsection.

History: 1989 a. 31, 336; 1991 a. 39; 1993 a. 16; 1997 a. 27; 1999 a. 9, 185; 2001 a. 16; 2007 a. 97; 2009 a. 28; 2011 a. 32.

Cross−reference: See also chs. NR 335 and 336, Wis. adm. code.

31.387 Dam rehabilitation projects. The department shall establish and administer a grant program under which the department shall provide grants to counties to rehabilitate dams located in those counties. The department may only provide a grant for a project under this section to match federal funds provided for the project under the federal Watershed Protection and Flood Prevention Act of 1953 (Public Law 83−566).

History: 2001 a. 16.

31.39 Fees for permits, approvals and hearings. **(1)** FEES REQUIRED. The department shall charge a permit or approval fee for carrying out its duties and responsibilities under ss. 31.02 to 31.185 and 31.33 to 31.38. The permit or approval fee shall accompany the permit application or request for approval.

(2) AMOUNT OF FEES. (a) For fees charged for permits and approvals under ss. 31.02 to 31.185 and 31.33 to 31.38, the department shall classify the types of permits and approvals based on the estimated time spent by the department in reviewing, investigating and making determinations whether to grant the permits or approvals. The department shall then set the fees as follows:

1. For a permit or approval with an estimated time of less than 3 hours, the fee shall be $30.

2. For a permit or approval with an estimated time of more than 3 hours but less than 9 hours, the fee shall be $100.

3. For a permit or approval with an estimated time of more than 9 hours, the fee shall be $300.

(b) For conducting a hearing on an application for which notice is provided under s. 31.06 (1), the person requesting the hearing for the permit or approval shall pay a fee of $25.

(2m) ADJUSTMENTS IN FEES. (a) The department shall refund a permit or approval fee if the applicant requests a refund before the department determines that the application for the permit or approval is complete. The department may not refund a permit or approval fee after the department determines that the application is complete.

(b) If the applicant applies for a permit or requests an approval after the project is begun or after it is completed, the department shall charge an amount equal to twice the amount of the fee that it would have charged under this section.

(c) If more than one fee under sub. (2) (a) or s. 30.28 (2) (a) or 281.22 is applicable to a project, the department shall charge only the highest fee of those that are applicable.

(d) The department, by rule, may increase any fee specified in sub. (2).

(2r) FEE FOR EXPEDITED SERVICE. (a) The department, by rule, may charge a supplemental fee for a permit or approval that is in addition to the fee charged under this section if all of the following apply:

1. The applicant requests in writing that the permit or approval be issued within a time period that is shorter than the time

Electronic reproduction of 2009−10 Wis. Stats. database, current through 2011 Wis. Act 39 and July 25, 2011.

limit promulgated under par. (b) for that type of permit or approval.

2. The department verifies that it will be able to comply with the request.

(b) If the department promulgates a rule under par. (a), the rule shall contain a time limit for each type of permit or approval classified under sub. (2) (a) for determining whether the department will grant the permit or approval.

(3) EXEMPTIONS. This section does not apply to any federal agency or state agency.

History: 1977 c. 29; 1979 c. 221; 1981 c. 346; 1989 a. 31, 324; 1995 a. 27, 227; 1997 a. 27.

Cross−reference: See also ch. NR 300, Wis. adm. code.

31.99 Parties to a violation. (1) Whoever is concerned in the commission of a violation of this chapter for which a forfeiture is imposed is a principal and may be charged with and convicted of the violation although he or she did not directly commit it and although the person who directly committed it has not been convicted of the violation.

(2) A person is concerned in the commission of the violation if the person:

(a) Directly commits the violation;

(b) Aids and abets the commission of it; or

(c) Is a party to a conspiracy with another to commit it or advises, hires or counsels or otherwise procures another to commit it.

History: 1975 c. 365.

2009−10 Wis. Stats. database updated and current through 2011 Wis. Act 39 and July 25, 2011. Statutory changes effective on or prior to 9−1−11 are printed as if currently in effect. Statutory changes effective after 9−1−11 are designated by NOTES. See Are The Statutes on this Website Official?

Unofficial Text (See Printed Volume). Current through date and Register shown on Title Page.

Chapter NR 345

DREDGING IN NAVIGABLE WATERWAYS

NR 345.01 Purpose.
NR 345.02 Applicability.
NR 345.03 Definitions.
NR 345.04 Dredging.
NR 345.05 Enforcement.

Note: Chapter NR 345 was created as an emergency rule effective April 19, 2004; chapter NR 345 was repealed and recreated by emergency rule effective August 24, 2004.

NR 345.01 Purpose. The purpose of this chapter is to establish reasonable procedures and limitations for exempt activities, general permits and individual permits for removal of material from the beds of navigable waterways as regulated under s. 30.20, Stats., in order to protect the public rights and interest in the navigable, public waters of the state as defined in s. 30.10, Stats.

History: CR 04−087: cr. Register April 2005 No. 592, eff. 5−1−05.

NR 345.02 Applicability. This chapter applies to removal of material from the bed of navigable waterways under s. 30.20 (1), (1g) (b), (1m), (1t) and (2), Stats. Any person that intends to remove material from the bed of a navigable waterway shall comply with all applicable provisions of this chapter and any permit issued under this chapter.

Note: For most dredging projects, the discharge of carriage return water is regulated by ch. 283, Stats., and requires a Wisconsin pollutant discharge elimination system (WPDES) permit. Similarly, for most dredging projects, the disposal of dredged material is regulated by ch. 289, Stats., and requires authorization under ch. NR 500. In accordance with 2003 Wisconsin Act 118, removal of material from non−navigable waterways is no longer regulated under s. 30.20, Stats.

History: CR 04−087: cr. Register April 2005 No. 592, eff. 5−1−05.

NR 345.03 Definitions. (1) "Area of special natural resource interest" has the meaning in s. 30.01 (1am), Stats., and as identified by the department in s. NR 1.05.

Note: "Area of special natural resource interest" means any of the following:

(a) A state natural area designated or dedicated under ss. 23.27 to 23.29, Stats.

(b) A surface water identified as a trout stream by the department under s. NR 1.02(7).

(bm) A surface water identified as an outstanding or exceptional resource water under s. 281.15, Stats.

(c) An area that possesses significant scientific value, as identified by the department in s. NR 1.05.

Information and lists can be obtained by contacting the department, or found on the department's website at www.dnr.wi.gov, under the topic "Waterway and Wetland Permits".

(2) "De minimus" activity means the dredging of less than 2 cubic yards in a calendar year from a specific waterbody or disturbance of bottom material during the manual removal of aquatic plants that meet the requirements of s. NR 109.06 (2).

Note: Where the bed material is privately owned, the permission of the property owner is required.

(3) "Department" means the department of natural resources.

(4) "Dredged material" means any material removed from the bed of a navigable waterway by dredging.

(5) "Dredging" means any part of the process of the removal or disturbance of material from the bed of a navigable waterways, transport of the material to a disposal, rehandling or treatment facility; treatment of the material; discharge of carriage or interstitial water; and disposal of the material. For the purpose of ch. 30, Stats., dredging does not include "de minimus" activities as defined in sub. (2).

(6) "Final stabilization" means that all land disturbing construction activities at the site have been completed and that a uniform perennial vegetative cover has been established with a density of at least 70% of the cover for the unpaved areas and areas not covered by permanent structures or that employ equivalent permanent stabilization measures.

(7) "Hazardous substance" has the meaning specified in s. 289.01 (11), Stats.

Note: Notwithstanding substances that meet the definition of hazardous substances in s. 289.01 (11), Stats., for the purpose of removing material from the bed of navigable streams and lakes, "hazardous substances" include all chemicals present at concentrations at, or greater than the *threshold effect concentration* as published in Consensus Based Contaminated Sediment Evaluation (DNR 2001).

(7k) "Jetting" means the action of dredging bottom sediments, including disturbing or resuspending sediment, while using water or air forced through a hose by means of a pump or vacuum to dislodge and collect aquatic plants, tubers or seeds.

(8) "Manual dredging" means removal or disturbance of bottom material by hand or using a hand−held device without the aid of external or auxiliary power. Manual dredging is often associated with the collection of aquatic insects for bait, removal of nuisance vegetation or debris and the panning for gold or other material. For the purpose of ch. 30, Stats., manual dredging does not include "de minimus" activities as defined in sub. (2).

(9) "Navigable waterway" means any body of water with a defined bed and bank, which is navigable under the laws of the state. In Wisconsin, a navigable body of water is capable of floating the lightest boat or skiff used for recreation or any other purpose on a regularly recurring basis.

Note: This incorporates the definition at s. 30.01(4m), Stats., and current case law, which requires a watercourse to have a bed and banks, *Hoyt v. City of Hudson*, 27 Wis. 656 (1871), and requires a navigable waterway to float on a regularly recurring basis the lightest boat or skiff, *DeGayner & Co., Inc. v. DNR*, 70 Wis. 2d 936 (1975); *Village of Menomonee Falls v. DNR*, 140 Wis. 2d 579 (Ct. App. 1987).

(10) "Ordinary high water mark" means the point on the bank or shore up to which the presence and action of water is so continuous as to leave a distinct mark either by erosion, destruction of terrestrial vegetation or other easily recognizable characteristic.

(10g) "Outlying waters" has the meaning in s. 29.001 (63), Stats.

(10r) "Plant and animal nuisance deposit" means a recent and natural deposit within the swash zone of a waterway of mussels, dead fish, Cladophora or similar natural, biological−based material caused by wave action in a quantity that is causing an annoyance, damage, or health issue to the public or waterway.

Note: "Plant and animal nuisance deposit" does not include the natural deposition of the native lakebed material like sand, cobble, silt, detritus, and other organic material.

(11) "Previously dredged area" means an area below the ordinary high water mark of a navigable waterway from which material was historically removed.

(12) "Riparian" means an owner of land abutting a navigable waterway.

(12m) "Rutting" is defined as an elongated depression caused by wheels or tracks of machinery, equipment or other vehicles and is 6 inches deep or more.

(13) "Stabilize" means the process of making a site steadfast or firm, minimizing soil movement by the use of practices such as mulching and seeding, sodding, landscaping, paving, graveling or other appropriate measures.

(13m) "Swash zone" as defined by the United States Army Corps of Engineers Coastal Engineering Manual, means the zone of wave action on the beach, which moves as water levels vary, extending from the limit of run−down to the limit of run−up.

Unofficial Text (See Printed Volume). Current through date and Register shown on Title Page.

Note: The "swash zone" does not typically include areas that are stabilized with vegetation. The United States Army Corps of Engineers Coastal Engineering Manual can be found at: http://www.usace.army.mil/publications/eng−manuals/

(14) "Utility crossing" means dredging by plow, vibratory plow or open trench methods, below the ordinary high water mark of a navigable waterway for the installation of cables, conduits or pipelines by an entity providing service for conveying any fluids, gases, electricity and communications or other public or private utility functions.

History: CR 04−087: cr. Register April 2005 No. 592, eff. 5−1−05; CR 05−037: cr. (7k) Register December 2005 No. 600, eff. 1−1−06; CR 07−112: cr. (10g), (10r), (12m) and (13m) Register July 2008 No. 631, eff. 8−1−08.

NR 345.04 Dredging. (1) EXEMPTIONS. (a) *Procedures*. Exemptions shall be processed according to the procedures in ch. NR 310.

(b) *Applicable activities*. The dredging of a farm drainage ditch which was not a navigable stream before ditching that meets all of the standards in par. (c), is exempt from the permit requirements of s. 30.20 (1) and (2), Stats., in accordance with s. 30.20 (1g) (a), Stats., manual dredging that meets all of the standards in par. (d) is exempt from the permit requirements of s. 30.20 (1) and (2), Stats., in accordance with s. 30.20 (1g) (b) 2., Stats.

Note: Eligibility for an exemption or general permit does not automatically result in a federal permit or state water quality certification for fill in wetlands. Some projects involving minimal wetland fill may be eligible for authorization under a U.S. Army Corps of Engineers general permit which has already been granted state water quality certification [see non−reporting and 404 GP activities in the table at *http://www.mvp.usace.army.mil/docs/regulatory/WIMATRIX.htm]* or a general permit under s. 281.36(8), Stats. (under development) All other projects affecting wetlands will require individual water quality certification including public notice as required by s. 401, Federal Clean Water Act, and s. 281.36 (2), Stats., and carried out under chs. NR 103 and 299. For further instructions, see the department's website at www.dnr.wi.gov under the topic "Waterway and Wetland Permits."

(c) *Standards for dredging of a farm drainage ditch which was not a navigable stream before ditching*. Dredging of a farm drainage ditch which was not a navigable stream before ditching is eligible for an exemption subject to the following limitation:

1. The project is located in a navigable stream that does not have stream history.

2. The applicant has notified the department of the proposed project 10 days prior to dredging.

3. The dredging may not have a long−term adverse effect on cold−water fishery resource or may not destroy cold water or warm water fish spawning beds or nursery areas.

4. The dredged material may not be temporarily or permanently placed in a wetland, floodway or below the ordinary high water mark of a navigable waterway.

5. The person conducting the dredging is the riparian owner or has permission of the riparian owner to remove bottom material.

6. To stop the spread of invasive species and viruses from one navigable waterway to another navigable waterway, all equipment or portions of equipment used for constructing, operating, or maintaining the project, including tracked vehicles, barges, boats, silt or turbidity curtains, hoses, sheet piles, and pumps, shall be decontaminated for invasive species and viruses before and after use or prior to use within another navigable waterway. Decontamination activities shall be performed by taking actions specified in subd. 6. a. to c. or h. Decontamination shall include either subd. 6. d., e., f., g., or h. for any equipment, or portions of equipment, that is used in non−frozen navigable waters when the air temperature is above 19 degrees Fahrenheit at the time the decontamination procedures take place.

a. Inspect all equipment used for constructing, operating, or maintaining the project and remove all plants and animals, and other mud, debris, etc.

b. Drain all water from equipment used in navigable waters.

Note: This does not apply to water in closed engine cooling systems or water tanks, or containers of potable drinking water or other beverages meant for human consumption. If a tanker truck discharges water collected from navigable waters in upland areas, the tank does not require disinfection.

c. Dispose of plants and animals in the trash. An operator may not transfer plants or animals or water from one navigable waterway to another.

d. Wash equipment at a temperature of not less than 212 degrees Fahrenheit water (steam clean).

e. Wash equipment with soap and water or high pressure water of not less than 2000 pounds per square inch.

f. Allow equipment to dry thoroughly for not less than 5 days.

Note: Additional drying techniques including drying through natural or mechanical means or changes in drying duration may be submitted to the department for review and approval.

g. Disinfect equipment with 200 parts per million (0.5 ounces per gallon) chlorine for not less than 10 minute contact time. Every effort should be made to keep the disinfection solution and rinse water out of surface waters.

Note: Chlorine refers to either household bleach solution (5.25% chlorine) or granular chlorine (70% calcium hypochlorite).

h. Follow the most recent department approved disinfection protocols or department approved best management practices for infested waters. The department shall maintain on its website and make available at its offices a list of the most recent disinfection protocols or department approved best management practices for invasive species and viruses.

Note: See the department's website at dnr.wi.gov under the topic "Waterway and Wetlands". Recommendations for additional disinfection or decontamination protocols or department approved best management practices may be submitted to the department for review and approval to be added to this list.

(d) *Standards for manual dredging activities*. Manual dredging is eligible for an exemption subject to the following limitations:

1. The dredging operation meets the definition of manual dredging in s. NR 345.03 (8).

2. The dredging may not be located in an area of special natural resource interest, or where there are public rights features as described in s. NR 1.06, or in perennial tributaries to surface waters identified as trout streams by the department in s. NR 1.02 (7).

3. The dredged material may not contain any hazardous substance as defined in s. NR 345.03 (7).

4. For each riparian property, the amount of bottom material dredged from a specific waterbody may not exceed 100 square feet in surface area and one foot in depth in a calendar year.

5. Any dredged material removed from the waterbody may not be temporarily or permanently placed in a wetland, floodway or re−deposited below the ordinary high water mark of a navigable waterway.

6. Erosion control measures shall meet or exceed the technical standards for erosion control approved by the department under subch. V of ch. NR 151. Any area where topsoil is exposed during construction shall be immediately seeded and mulched or riprapped to stabilize disturbed areas and prevent soils from being eroded and washed into the waterway.

Note: These standards can be found at the following website: http://dnr.wi.gov/org/water/wm/nps/stormwater/techstds.htm

7. Mechanical equipment may not be operated below the ordinary high water mark or on the bed of a navigable waterway.

8. The applicant is the riparian owner or has permission of the riparian owner to remove bottom material.

Note: When the state is the riparian property owner, the requirements of s. NR 45.04 shall be met.

9. To stop the spread of invasive species and viruses from one navigable waterway to another navigable waterway, all equipment or portions of equipment used for constructing, operating, or maintaining the project, including tracked vehicles, barges, boats, silt or turbidity curtains, hoses, sheet piles, and pumps, shall be decontaminated for invasive species and viruses before and after use or prior to use within another navigable waterway. Decontamination activities shall be performed by taking actions specified in subd. 9. a. to c. or h. Decontamination shall include either subd. 9. d., e., f., g., or h. for any equipment, or portions of equipment,

that is used in non−frozen navigable waters when the air temperature is above 19 degrees Fahrenheit at the time the decontamination procedures take place.

a. Inspect all equipment used for constructing, operating, or maintaining the project and remove all plants and animals, and other mud, debris, etc.

b. Drain all water from equipment used in navigable waters.

Note: This does not apply to water in closed engine cooling systems or water tanks, or containers of potable drinking water or other beverages meant for human consumption. If a tanker truck discharges water collected from navigable waters in upland areas, the tank does not require disinfection.

c. Dispose of plants and animals in the trash. An operator may not transfer plants or animals or water from one navigable waterway to another.

d. Wash equipment at a temperature of not less than 212 degrees Fahrenheit water (steam clean).

e. Wash equipment with soap and water or high pressure water of not less than 2000 pounds per square inch.

f. Allow equipment to dry thoroughly for not less than 5 days.

Note: Additional drying techniques including drying through natural or mechanical means or changes in drying duration may be submitted to the department for review and approval.

g. Disinfect equipment with 200 parts per million (0.5 ounces per gallon) chlorine for not less than 10 minute contact time. Every effort should be made to keep the disinfection solution and rinse water out of surface waters.

Note: Chlorine refers to either household bleach solution (5.25% chlorine) or granular chlorine (70% calcium hypochlorite).

h. Follow the most recent department approved disinfection protocols or department approved best management practices for infested waters. The department shall maintain on its website and make available at its offices a list of the most recent disinfection protocols or department approved best management practices for invasive species and viruses.

Note: See the department's website at dnr.wi.gov under the topic "Waterway and Wetlands". Recommendations for additional disinfection or decontamination protocols or department approved best management practices may be submitted to the department for review and approval to be added to this list.

(e) *Standards for dredging necessary to place or maintain an exempt structure under s. 30.20 (1g) (b) 1., Stats.* The standards for this activity are contained in the rules that describe the exempt structures.

Note: Chapters NR 320, 323, 326, 328 and 329 contain rules regarding various exempt activities including culvert replacement, habitat structures, piers, boat shelters, riprap replacement, intake and outfall structures and dry fire hydrants.

(f) *Permit required.* 1. Activities which do not meet the standards in par. (c), (d) or (e) are determined ineligible for an exemption by the department shall require a general permit or contract or individual permit or contract.

2. The department has the authority under s. 30.20 (1m), Stats., to require a permit in lieu of exemption.

(2) GENERAL PERMITS. (a) *Procedures*. 1. General permits shall be processed according to the procedures in ch. NR 310.

2. If the department determines that a dredging proposal submitted under this section has the potential to impact an endangered or threatened species in accordance with s. 29.604, Stats., the application shall be deemed incomplete. The department may not consider the application complete or issue a general permit until the applicant submits documentation to demonstrate one of the following:

a. The dredging project avoids impacts to the endangered or threatened species in accordance with s. 29.604, Stats.

b. The dredging project has received an incidental take authorization under s. 29.604, Stats.

2m. If the department determines that the dredging proposal submitted under this section has the potential to impact an archaeological site or historic structure in accordance with s. 44.40, Stats., the application shall be deemed incomplete. The department may not consider the application complete or issue a general permit until the applicant submits documentation to demonstrate that the dredging project avoids impacts to the archaeological site or historic structure, or completes and documents requested investigations of archaeological sites or historic structures in accordance with s. 44.40, Stats. Reports of completed archaeological or historic structures investigations for projects are subject to departmental and Wisconsin Historical Society review and approval in advance of permit issuance.

3. If the applicant modifies their dredging project plans to meet the requirements of subd. 2. or 2m., the modified plans shall be submitted before the department can consider the application complete or issue a general permit.

4. General permit applications under par. (i) for licensed aquatic nursery growers may be submitted to the department of agriculture, trade and consumer protection. Applications shall be considered received on the date they are received by the department.

Note: Applications may be obtained from the department's regional headquarters or service centers, or on the department's website at www.dnr.wi.gov under the topic "Waterway and Wetland Permits." DATCP has agreed to send application forms and instructions provided by the department to aquatic nursery growers along with license renewal forms. DATCP will forward all applications to the department for processing.

(b) *Applicable activities*. Dredging that meets all of the standards in par. (c) and either par. (d), (f), (h), (i), (im) or (ir) is eligible for a general permit under ss. 30.20 (1t) (b) and 30.206, Stats. Dredging that meets all of the standards in par. (c) and either par. (e) or (g) is eligible for a general permit under ss. 30.20 (1t) (a) and (am) and 30.206, Stats.

Note: Eligibility for an exemption or general permit does not automatically result in a federal permit or state water quality certification for fill in wetlands. Some projects involving minimal wetland fill may be eligible for authorization under a U.S. Army Corps of Engineers general permit which has already been granted state water quality certification [see non−reporting and 404 GP activities in the table at *http://www.mvp.usace.army.mil/docs/regulatory/WIMATRIX.htm]* or a general permit under s. 281.36(8), Stats. (under development) All other projects affecting wetlands will require individual water quality certification including public notice as required by s. 401, Federal Clean Water Act, and s. 281.36 (2), Stats., and carried out under chs. NR 103 and 299. For further instructions, see the department's website at *www.dnr.wi.gov* under the topic "Waterway and Wetland Permits."

(c) *General permit standards*. In order to be eligible for a general permit, projects must meet all of the general permit standards in par. (c) in the addition to the specific activity standards in par. (d), (e), (im) or (ir).

1. The applicant shall provide information that the dredged material does not contain any hazardous substance as follows:

a. Through the collection and laboratory analysis of the dredged material in compliance with ch. NR 347; or

b. Through the review of historical dredge material information from the vicinity of the proposed project that was collected and analyzed in accordance with ch. NR 347; or

c. By assessing the potential for hazardous substances to be present based upon the characteristic of the watershed, industrial and municipal discharges to the waterbody and dredge material data from similar waterways.

2. To protect fish habitat during spawning seasons, the dredging may not occur during the following time periods:

a. For trout streams identified under s. NR 1.02 (7) and perennial tributaries to those trout streams, September 15 through May 15.

b. For all waters not identified in subd. 2. a. and located south of state highway 29, March 15 through May 15.

c. For all waters not identified in subd. 2. a. and located north of state highway 29, April 1 through June 1.

d. The applicant may request that the requirement in subd. 2. a., b. or c. be waived by the department on a case−by−case basis, by submitting a written statement signed by the local department fisheries biologist, documenting consultation about the proposed dredging project, and that the local department fisheries biologist has determined that the requirements of this paragraph are not necessary to protect fish spawning for the proposed project.

Unofficial Text (See Printed Volume). Current through date and Register shown on Title Page.

3. Any dredged material removed from the waterbody may not be permanently placed in a wetland, or floodway or re−deposited below the ordinary high water mark of a navigable waterway, except as provided for as backfill in accordance with par. (d) 9.

4. Dredged material may be temporarily placed for not more than 8 hours within a wetland or below the ordinary high water mark of a navigable waterway if the material is placed on matting with appropriate erosion control to prevent runoff. Any areas used for temporary placement shall be completely restored within 24 hours.

5. The project shall be conducted in a manner that prevents dispersal of sediment away from the project site. Temporary control measures such as silt curtains shall be used as needed, and shall be installed prior to dredging and removed from the waterbody no more than 24 hours after dredging is complete. Any temporary control measures shall follow all state lighting requirements and may not obstruct navigation.

6. Dredging shall be conducted to minimize the re−suspension of sediment to the maximum extent practicable in accordance with the following:

a. For trout streams identified under s. NR 1.02 (7) and perennial tributaries to those trout streams, the total suspended solid concentrations may not exceed 40 mg/L.

b. For all waters not identified in subd. 6. a., the total suspended solid concentrations may not exceed 80 mg/L.

7. Erosion control measures shall meet or exceed the technical standards for erosion control approved by the department under subch. V of ch. NR 151. Any area where topsoil is exposed during construction shall be immediately seeded and mulched to stabilize disturbed areas and prevent soils from being eroded and washed into the waterway.

Note: These standards can be found at the following website: http://dnr.wi.gov/org/water/wm/nps/stormwater/techstds.htm

8. Unless part of a permanent stormwater management system, all temporary erosion and sediment control practices shall be removed upon final site stabilization. Areas disturbed during removal shall be restored.

9. To stop the spread of invasive species and viruses from one navigable waterway to another navigable waterway, all equipment or portions of equipment used for constructing, operating, or maintaining the project, including tracked vehicles, barges, boats, silt or turbidity curtains, hoses, sheet piles, and pumps, shall be decontaminated for invasive species and viruses before and after use or prior to use within another navigable waterway. Decontamination activities shall be performed by taking actions specified in subd. 9. a. to c. or h. Decontamination shall include either subd. 9. d., e., f., g., or h. for any equipment, or portions of equipment, that is used in non−frozen navigable waters when the air temperature is above 19 degrees Fahrenheit at the time the decontamination procedures take place.

a. Inspect all equipment used for constructing, operating, or maintaining the project and remove all plants and animals, and other mud, debris, etc.

b. Drain all water from equipment used in navigable waters.

Note: This does not apply to water in closed engine cooling systems or water tanks, or containers of potable drinking water or other beverages meant for human consumption. If a tanker truck discharges water collected from navigable waters in upland areas, the tank does not require disinfection.

c. Dispose of plants and animals in the trash. An operator may not transfer plants or animals or water from one navigable waterway to another.

d. Wash equipment at a temperature of not less than 212 degrees Fahrenheit water (steam clean).

e. Wash equipment with soap and water or high pressure water of not less than 2000 pounds per square inch.

f. Allow equipment to dry thoroughly for not less than 5 days.

Note: Additional drying techniques including drying through natural or mechanical means or changes in drying duration may be submitted to the department for review and approval.

g. Disinfect equipment with 200 parts per million (0.5 ounces per gallon) chlorine for not less than 10 minute contact time. Every effort should be made to keep the disinfection solution and rinse water out of surface waters.

Note: Chlorine refers to either household bleach solution (5.25% chlorine) or granular chlorine (70% calcium hypochlorite).

h. Follow the most recent department approved disinfection protocols or department approved best management practices for infested waters. The department shall maintain on its website and make available at its offices a list of the most recent disinfection protocols or department approved best management practices for invasive species and viruses.

Note: See the department's website at dnr.wi.gov under the topic "Waterway and Wetlands". Recommendations for additional disinfection or decontamination protocols or department approved best management practices may be submitted to the department for review and approval to be added to this list.

10. If the project location is within the riparian zone, the applicant is the riparian owner or has permission of the riparian owner to dredge the bottom material.

(d) *Standards for installation of utility crossing.* Dredging to install a utility crossing is eligible for a general permit subject to all of the following limitations:

1. The location of the utility crossing shall be located to reduce environmental impacts by minimizing the disturbance of the following: adjacent wetland corridors, banks with steep slopes and fish and wildlife habitat within the waterway.

2. The dredging may occur only to cross a navigable stream no more than 35 feet across.

3. The general permit may authorize up to 10 waterway crossings that are part of a single project.

4. The size of the open trench or plowed channel may not exceed 48 inches in width in perennial streams and 72 inches in intermittent streams where no flow is present during construction.

5. The dredging shall conform to the dimensions and elevations shown on the application.

6. All equipment used for the project shall be designed and properly sized to minimize to the extent practicable, the amount of sediment that is resuspended into the water.

7. Any area within 75 feet of the ordinary high water mark, where topsoil is exposed during construction, shall be stabilized within 24 hours to prevent soil from being eroded and washed into the waterway.

8. During construction and installation of the utility crossing, the entire volume of the stream flow shall be maintained downstream from the project site.

9. During excavation of the trench, dredged material may be temporarily stockpiled in an upland area provided it is separated from the stream by an installed silt fence or a protective, vegetated buffer strip not less than 20 feet in width.

10. The trench excavation, filling and installation of utility crossing the below the ordinary high mark shall be completed within an 8−hour period.

11. In perennial streams, clean, washed gravel or crushed stone or clean river stone originally removed from the utility trench or plowed channel, shall be used as backfill material to replace the excavated material. In intermittent streams with no flow present, the originally removed material may be used as backfill material for the dredged trench if the disturbed site is immediately stabilized.

12. When the dredging is complete, the streambed contours shall be the same as the pre−construction contours.

(e) *Standards for maintenance dredging in established drainage districts*. Dredging to maintain a district drain which is part of a drainage district established under ch. 88, Stats., is eligible for a general permit subject to the following limitations:

1. Unless the department previously authorized the project under s. 30.20, Stats., the dredging may not be located in an area of special natural resource interest.

2. Unless the department previously authorized the project under s. 30.20, Stats., the dredging may not be located where there are public rights features as described in s. NR 1.06.

3. Dredging shall comply with s. ATCP 48.32.

4. Maintenance of the district ditch and any structures in the ditch shall comply with the established specifications and compliance plan under ss. ATCP 48.20 and 48.22.

5. Dredging may not exceed the volume or extend beyond the dimensions of the previously dredged project.

6. The total amount of material removed from the area shall be less than 3000 cubic yards or, if greater than 3000 cubic yards, a previous environmental assessment or environmental impact statement shall meet the requirements of s. NR 150.20 (2) (c).

(f) *Standards for manual dredging.* 1. A general permit, subject to all of the following limitations may authorize manual dredging activities that do not meet the exemption standards in s. NR 345.04 (1) (d).

2. The dredging operation meets the definition of manual dredging in s. NR 345.03 (5).

3. For each riparian property, the amount of bottom material removed from a waterbody may not exceed 10 cubic yards in a calendar year.

4. The project may not be located where there are public rights features as described in s. NR 1.06.

Note: When the state is the riparian property owner, the requirements of ch. NR 45 shall be met.

(g) *Standards for maintenance dredging of previously dredged areas.* Maintenance dredging of material from an area from which material has previously been removed is eligible for a general permit subject to all of the following limitations:

1. Unless the department previously authorized the project under s. 30.20, Stats., the dredging may not be located in an area of special natural resource interest, or where there are public rights features as described in s. NR 1.06.

2. The total amount of material removed from the area shall be less than 3000 cubic yards or, if equal to or greater than 3000 cubic yards, a previous environmental assessment or environmental impact statement shall meet the requirements of s. NR 150.20 (2) (c).

3. Dredging may not exceed the volume or extend beyond the dimensions of the previous dredge project.

4. The applicant has provided information that the area meets the requirements of "previously dredged area" as follows:

a. The applicant can demonstrate that previous removal of material was authorized by the department; or

b. The applicant can demonstrate historical information documenting the previous removal of material including the date of removal, the volume of material removed and location of the material disposal.

5. Unless the dredging project is for the removal of material associated with maintenance of a harbor or marina located on Lake Michigan or Superior, the material removed may not exceed 50,000 cubic yards.

(h) *Standards for jetting to harvest aquatic plants, tubers or seeds.* Jetting of the bottom sediments during the harvesting of aquatic plants is eligible for a general permit which will meet the substantive requirements of ch. NR 109, subject to all of the following limitations:

1. The project shall be in a location where the bed of the waterway is privately−owned or a location where the bed of the waterway is publicly−owned if the department determines that the project is consistent with the aquatic plant management activities authorized under ch. NR 109.

Note: Under Wisconsin law, the bed of natural lakes is publicly−owned, and the bed of rivers and streams is owned by the adjacent riparian to the center of the river or stream. For impoundments or raised lakes, the bed is privately owned to the edge of the natural lakebed.

2. The applicant shall be licensed by the department of agriculture, trade and consumer protection as a nursery grower under s. 94.10, Stats.

3. All dislodged aquatic plants and floating debris shall be removed from the waterbody at the end of each day.

4. The equipment and motors used for jetting loose the aquatic plants shall conform to the following specifications:

a. The pumps may not exceed 6 ½ horsepower.

b. The hoses may not exceed 3 inches inside diameter.

c. The intake strainer may not exceed $^3/_8$ inch mesh.

5. To provide for re−growth of aquatic plants, the area dredged may not exceed 50 feet by 15 feet and an area 5 feet in width shall be left undisturbed around all dredge sites regardless of its size. Multiple areas 50 feet by 15 feet may be dredged within a waterbody if consistent with subd. 6.

6. The general permit authorizes up to 5 acres of jetting, but no more than 50% of the aquatic vegetation from the waterbody.

7. Only one general permit shall be issued for each area of a waterbody on an annual basis.

(i) *Standards for dredging less than 25 cubic yards from a river or stream.* Dredging less than 25 cubic yards is eligible for a general permit subject to all of the following limitations:

1. The dredging may not be located on a lake or impoundment, in an area of special natural resource interest, or where there are public rights features as described in s. NR 1.06.

2. The bottom material shall be dredged by mechanical operation of a bucket excavator or backhoe.

3. The dredged material may not be temporarily stockpiled within 75 feet of the ordinary high water mark.

4. The removal of bottom material shall be located in less than 3 feet of water and within 50 feet of the ordinary high water mark.

5. The dredging may not result in water depth greater than 5 feet.

6. For each riparian property, the amount of bottom material dredged from a waterbody may not exceed 25 cubic yards in a calendar year.

(im) *Standards for removal of plant and animal nuisance deposits.* All of the following are standards for removal of plant and animal nuisance deposits.

1. The removal shall only be located in outlying waters.

2. This general permit is for the one time removal of the plant and animal nuisance deposit. Only 3 general permits for plant and animal nuisance deposits may be issued for any area of a waterbody on an annual basis. For the general permit requirements listed under this paragraph, an area of a waterbody is the geographical location of the project as indicated on the general permit application form.

Note: General permit application forms are available at department service centers and on the department website at http://dnr.wi.gov under the topic "Waterway and Wetland Permits".

3. The project area to which this general permit applies shall be under the same ownership as the applicant.

4. The removal may not be located where there are public rights features as described in s. NR 1.06 or in waters in ecologically significant coastal wetlands along Lakes Michigan and Superior as identified in the Coastal Wetlands of Wisconsin (DNR−CMP project).

Note: The Coastal Wetlands of Wisconsin's Great Lakes can be found at the following website http://dnr.wi.gov/org/land/er/nhi/projects/ under the topic "Coastal Wetlands".

5. The removal shall only be located within the swash zone of the waterway.

6. The removal is limited to the plant and animal nuisance deposit only. The removal of material other than plant and animal nuisance deposits should be limited to the extent practicable and may not exceed a de minimus amount.

Note: The material may contain trash which should be removed along with the plant and animal nuisance deposit.

Unofficial Text (See Printed Volume). Current through date and Register shown on Title Page.

7. The total amount of material removed shall be less than 3000 cubic yards.

8. This general permit does not authorize the redistribution of native lakebed material which includes sand, cobble, silt, detritus, and other organic material or the placement of additional sand/stone, etc.

9. Equipment used shall be designed to skim only the plant and animal nuisance deposit off of the native lakebed. The equipment shall be used in a manner that minimizes the impacts to the native lakebed and surrounding vegetation.

10. Equipment used shall be low ground pressure equipment, including wide−tire vehicles, and tracked equipment, to minimize rutting. The equipment shall remove the material along a path parallel to the shore within the swash zone. Equipment operation shall cease when rutting occurs. Any rutting of the lakebed shall be immediately restored by the operator of the vehicle.

Note: The depth of the rut is measured from the original lakebed surface to the bottom of the depression. If individual lug depressions are visible, the depth would be measured to the lesser of the two depths (e.g., the top of the lug). Measurements are not cumulative.

11. If the removed material will be disposed of by landspreading, the material shall be incorporated into the soil by plowing or disking within 24 hours.

12. Unless using a developed boat launch, equipment used in the removal shall access the swash zone along one path perpendicular to the shore. The chosen route shall minimize the impact to the shoreline and vegetated lakebed.

(ir) *Standards for using motor vehicles for the management of non−native and invasive plant species growing on the exposed lakebed of outlying waters*. All of the following are standards for using motor vehicles, as defined in s. 30.29, Stats., for the management of non−native and invasive emergent plant species growing on exposed lakebed.

1. The project shall be located on the exposed lakebed of outlying waters.

2. The project shall be conducted when the exposed lakebed is dry.

3. The project area to which this general permit applies shall be under the same ownership as the applicant.

4. The use of the motor vehicle is for the purpose of controlling emergent invasive or nonnative aquatic plant species as designated by the department under s. 23.24, Stats., and s. NR 109.07.

5. The use of the motor vehicle is for mowing or spreading herbicide in conformance with a written invasive or nonnative aquatic plant species control plan approved by the department.

Note: An invasive or nonnative aquatic plant species control plan, as required under s. NR 109.04 (3) and described in s. NR 109.09, must contain the following items: a description of the existing condition including the types of plants present and their abundance; a strategy for the control of the invasive or nonnative aquatic plant species; a plan for the re−establishment of the native plant community; and a monitoring plan to assess the success or failure of the control plan.

6. For projects requiring a permit under ch. NR 107 or 109, before the department can consider the application complete or issue a general permit under this section, the applicant shall submit documentation to demonstrate that a permit under ch. NR 107 or 109 has been applied for.

Note: The chemical treatment of aquatic plants may require a permit under ch. NR 107 and physical removal of aquatic plants may require a permit under ch. NR 109.

7. The motor vehicle may only be operated in the specific area that is detailed in the approved invasive species control plan or permit. This permit does not authorize the operation of any motor vehicle in areas outside of those designated in the approved plan or permit.

8. Equipment used shall be low ground pressure equipment, including wide−tire vehicles, and tracked equipment, to minimize rutting. Equipment operation shall cease when rutting occurs. Any rutting of the lakebed shall be immediately restored by the operator of the vehicle.

Note: The depth of the rut is measured from the original lakebed surface to the bottom of the depression. If individual lug depressions are visible, the depth would be measured to the lesser of the 2 depths (e.g., the top of the lug). Measurements are not cumulative.

9. The motor vehicle shall be used in a manner that minimizes the impacts to the native lakebed material and any surrounding native vegetation.

10. To minimize impacts to small animals and native plants and to prevent soil disruption and rhizome spread, the mowing deck shall be set no lower than 4 inches above the ground when operating equipment.

11. To protect wildlife habitat during nesting seasons, the use of a motor vehicle to control emergent invasive or nonnative aquatic plant species may only occur between August 1st and March 15th of the subsequent year.

12. The applicant may request that the requirement in subd. 11. be waived by the department on a case−by−case basis, by submitting a written statement signed by the local department wildlife biologist, documenting consultation about the proposed control plan, and that the local department wildlife biologist has determined that the requirements of subd. 11. are not necessary to protect wildlife habitat during the nesting season for the proposed project.

(j) *Individual permit or contract required*. 1. Activities which do not meet the standards in par. (c) and either par. (d), (e), (f), (g), (h), (i), (im), (ir) or (j) shall require an individual permit or contract.

2. The department has authority under s. 30.206 (3r), Stats., to require an individual permit or contract in lieu of a general permit.

(3) INDIVIDUAL PERMITS. (a) *Procedures*. 1. Individual permits shall be processed according to the procedures in ch. NR 310.

2. If the department determines that a proposal submitted under this section has the potential to impact an endangered or threatened species in accordance with s. 29.604, Stats., the application shall be deemed incomplete. The department may not consider the application complete or issue an individual permit until the applicant submits documentation to demonstrate one of the following:

a. The project avoids impacts to the endangered or threatened species in accordance with s. 29.604, Stats.

b. The project has received an incidental take authorization under s. 29.604, Stats.

3. If the applicant modifies their project plans to meet the requirements of subd. 2., the modified plans shall be submitted before the department can consider the application complete or issue an individual permit.

(b) *Applicable activities*. Any dredging which is not exempt under sub. (1) and is not authorized by a general permit under sub. (2), requires authorization by an individual permit pursuant to s. 30.20 (1), Stats.

(c) *Standards*. 1. Dredging which meets the standards in s. 30.20 (2), Stats., may be authorized under an individual permit or contract.

2. All applicable provisions in chs. NR 346 and 347 shall be met.

History: CR 04−087: cr. Register April 2005 No. 592, eff. 5−1−05; CR 05−037: am. (1) (d), cr. (2) (a) 4., and (2) (f) to (i), am. (2) (b), renum. (2) (f) to be (2) (j) and am. Register December 2005 No. 600, eff. 1−1−06; CR 07−112: cr. (2) (a) 2m., (im) and (ir), am. (2) (a) 3., (b), (c) (intro.), 7., 9. and (j) 1. Register July 2008 No. 631, eff. 8−1−08; correction in (2) (im) 2. made under s. 13.92 (4) (b) 7., Stats., Register July 2008 No. 631; **CR 07−094: cr. (1) (c) 6. and (d) 9., r. and recr. (2) (c) 9. Register November 2008 No. 635, eff. 12−1−08.**

NR 345.05 Enforcement. (1) Noncompliance with the provisions of ss. 30.20 and 30.206, Stats., this chapter, or any conditions of an exemption, general permit or individual permit issued by the department, constitutes a violation and may result in

Unofficial Text (See Printed Volume). Current through date and Register shown on Title Page.

a forfeiture. The department may seek abatement under s. 30.294, Stats., for any violation of ss. 30.20 and 30.206, Stats.

(2) If the activity may be authorized by a general permit under s. 30.206, Stats., failure of an applicant to follow procedural requirements may not, by itself, result in abatement of the activity.

(3) When an after−the−fact permit application has been filed with the department, the department shall follow the procedures in ch. NR 301 for violations.

(4) Any violation of these rules shall be treated as a violation of the statutes they interpret or are promulgated under.

(5) No person may remove material from the bed of a navigable waterway if the activity is not eligible for an exemption, authorized by a general permit or individual permit issued under this chapter, or otherwise authorized under this chapter.

History: CR 04−087: cr. Register April 2005 No. 592, eff. 5−1−05.

Appendix G

Open Meeting Rules

See also Ch. 19, Wis. Stats. (Appendix F)

UW Extension Local Government Center

FACT SHEET

Number 1 Revised April 2003

WISCONSIN OPEN MEETINGS LAW

§§19.81-19.98, *Wisconsin Statutes*

POLICY

§19.81

A. Declaration. The legislature declares that state policy is to

1. enable the public to have "the fullest and most complete information regarding the affairs of government as is compatible with the conduct of government business."

2. ensure that meetings of governmental bodies are held in places reasonably accessible to the public.

3. ensure that such meetings are open to the public unless otherwise expressly provided by law.

B. Interpretation. The Open Meetings Law is to be "liberally construed" (i.e. broadly interpreted) to achieve the purpose of open government. (The rule that penal statutes are strictly construed applies only to the enforcement of forfeitures under the law.)

DEFINITIONS; COVERAGE

A. "Governmental bodies" subject to the Open Meetings Law

1. State & local bodies. A "governmental body" under the Open Meetings Law includes any state or local agency, board, commission, committee and council created by law, ordinance, rule or order. §19.82(1). At the local level, bodies covered include school boards, county, village and town boards, city councils, and all their committees, commissions and boards. The term "rule or order" has been broadly interpreted by the attorney general to include formal and informal directives by a governmental body or officer that sets up a body and assigns it duties[1]. §19.82(1). The term would include resolutions.

2. Governmental & quasi-governmental corporations; other bodies. In addition to the above, the term "governmental body" under the law includes governmental and quasi-governmental corporations and certain other specified entities. §19.82(1). A governmental or quasi-governmental corporation includes corporations created by the legislature or by other governmental bodies under statutory authorization[2]. A quasi-governmental corporation is subject to the law, even though it was not created by a governmental body, if it has the attributes of a governmental corporation[3]. However, merely serving a public purpose and receiving more than 50% of its funding from a public source do not in themselves make a corporation a "quasi-governmental corporation." But when a corporation, such as a local economic development corporation, performs public duties and sufficiently exhibits the characteristics of a governmental corporation, then it falls under the law[4].

3. Special and advisory bodies. Special study committees and other advisory committees set up by a local officer, the local governing body or by a body it has created are also subject to the law[5].

4. Collective bargaining. A local governmental body conducting collective bargaining is not subject to the law. However, notice of reopening a collective bargaining agreement must be given under the Open Meetings Law and final ratification of the agreement must be done in open session under such law. §§19.82(1) & 19.86.

B. "Meetings" under the Open Meetings Law

1. Definition. A meeting is defined as a gathering of members of a governmental body for the purpose of exercising responsibilities and authority vested in the body. §19.82(2). The courts apply a *purpose test* and a *numbers test* to determine if a meeting occurred[6].

2. Purpose & numbers tests

a. **Purpose test**. This test is met when discussion, information gathering or decision-making takes place on a matter within the governmental body's jurisdiction. This test is met even if no votes are taken; mere discussion or information gathering satisfies the test. Notice is therefore required if the *numbers test* is also met.

b. Numbers test. This test is met when there are enough members to determine the outcome of an action. If the *purpose test* is also met, then a meeting occurs under the law. The numbers test may be met if fewer than one-half of the members of the body are present—if such number can determine the outcome. This is called a "negative quorum." For example, since amending an adopted municipal budget requires a two-thirds vote, a meeting occurs when one-third plus one of the members meet to discuss the matter[7]. (This number can block the required two-thirds vote to pass a budget amendment.)

3. "Walking quorums"; telephone calls; email. A series of gatherings of members of a governmental body may cumulatively meet the numbers test, making a "walking quorum" in violation of the Open Meetings Law if the purpose test is also met[8]. Telephone conference calls among members, when the two tests are met, qualify as meetings, and must be held in such manner as to be accessible to the public, as with use of an effective speaker system[9]. (Telephone conference meetings should be used rarely, and preferably held only after seeking the advice of legal counsel.) A "walking quorum" by successive telephone calls is also subject to the law. Email messages could also be construed to qualify as a meeting of a governmental body, but this method of communicating raises numerous issues under the law concerning such matters as public accessibility and inadvertently meeting the numbers test. The state attorney general discourages members of a governmental body from communicating with each other in this fashion about issues under the body's authority[10].

4. Multiple meetings. A meeting under the law may occur when a sufficient number of members of one governmental body attend the meeting of another body to gather information about a subject over which they have responsibility. Unless the gathering of the members is by chance, a meeting should be noticed for both bodies[11].

5. Certain gatherings not meetings. Chance gatherings, purely social gatherings, and joint attendance at conferences, where the *numbers test* is met, are not meetings if business is not conducted (that is, if the *purpose test* is not met). §19.82(2).

6. Presumption of a meeting. If one-half or more of the members of a governmental body are present, a statutory presumption exists that there is a meeting. This presumption can be overcome by showing that the *purpose test* was not met or that an exception applied. §19.82(2).

7. Town & drainage board exceptions. Limited exceptions to when a "meeting" occurs under the Open Meetings Law have been created for *town boards, town sanitary commissions* and *drainage boards* gathering at certain sites. §19.82(2).

a. Exception. The town board may gather at the site of a public works project or highway, street or alley project approved by the board for the sole purpose of inspecting the work, without following the usual notice, accessibility and other requirements under the Open Meetings Law. §60.50(6).

b. Notice. To come under this exception, the town board chairperson or designee must notify news media by telephone or fax of the upcoming inspection, if the media have filed a written request for notice of "such inspections in relation to that project."

c. Report. After the inspection, the town board chairperson or designee must submit a report describing the inspection at the next town board meeting.

d. Prohibition on taking action. No town board action may be taken at the inspection site.

e. Sanitary commissions & drainage boards. The same exception and requirements apply to town sanitary commissions gathering at one of their public works projects, with the notice and reporting duties performed by the commission president or designee. §60.77(5)(k). A similar provision applies to drainage district boards gathering at specified sites. §88.065(5)(a).

NOTICE & ACCESS

A. Accessibility. The place of meeting must be reasonably accessible to the public, including persons with disabilities. §19.82(3). Accordingly, the facility chosen for a meeting must be sufficient for the number of people reasonably expected to attend[12].

B. Public notice; posting. Public notice is required for every meeting of a governmental body. §§19.83 & 19.84. This notice may be accomplished by posting in places likely to be seen by the public; a minimum of three locations is recommended[13]. The notice requirements of other applicable statutes must be followed. Although paid, published newspaper notices are *not* required by the Open Meetings Law, other specific statutes may require them[14]. §19.84. If notices are published, posting is still recommended.

C. Notice to media. Notice must be provided to news media who have requested it in writing. §19.84(1)(b). Notice may be given in writing, by telephone[15], voice mail, fax or email. Written methods are preferable because they create a record that can be used to show compliance with this notice requirement. Notice must also be provided to the governmental unit's official newspaper, or, if there is no official newspaper, it must be sent to a news medium likely to give notice in the area.

D. Notice of certain disciplinary & employment matters. Actual notice must be given to an employee or licensee of any evidentiary hearing or meeting at which final action may be taken at a closed session regarding dismissal, demotion, licensing, discipline, investigation of charges or the grant or denial of tenure. §19.85(1)(b). The notice must contain a statement that the affected employee or licensee has the right to demand that such hearing or meeting be held in open session.

E. Timing of public notice. At least a 24-hour notice of a meeting is required; however, if 24 hours is impossible or impractical for good cause, a shorter notice may be given, but in no case may the notice be less than 2 hours. §19.84(3). This "good cause" provision allowing short notice should be used sparingly and only when truly necessary.

F. Separate public notice required. A separate notice for each meeting is required. §19.84(4). A general notice of a body's upcoming meetings is not sufficient[16].

G. Public notice contents

1. Items shown. Notice must specify the time, date, place and subject matter of the meeting. §19.84(2).

2. Specificity. The notice must be "reasonably likely to apprise members of the public and the news media" of the subject matter of the meeting. §19.84(2). In other words, the notice must be specific enough to let people interested in a matter know that it will be addressed.

3. Anticipated closed session. If a closed session on an item is anticipated, notice of such item and closed session must be given, and the statutory citation allowing closure should be cited. §19.84(2).

4. Consideration limited. Consideration of matters in open and closed session is limited to the topics specified in the notice, except as noted in 5. §§19.84(2) & 19.85(1)(intro.).

5. Public comment. The notice may provide for a period of "*public comment*." During this period the body may receive information from members of the public and discuss such matters (but may not take action on them unless properly noticed). §§19.83(2) & 19.84(2).

H. Openness; recording & photographing. Meetings must be open to all persons, except when closed for a specific purpose according to law (see following heading). §§ 19.81(2) & 19.83(1). In addition, the governmental body meeting must make a "reasonable effort to accommodate" persons wishing to record, film or photograph the meeting, provided that such acts do not interfere with the meeting or the rights of participants. §19.90.

PERMITTED EXEMPTIONS FOR HOLDING CLOSED SESSIONS

A. Policy; strict construction of exemptions. The Open Meetings Law generally declares that it is state policy to provide the public with "the fullest and most complete information regarding the affairs of government as is compatible with the conduct of government business," and that the law must be interpreted liberally to achieve this purpose (except for the forfeiture provisions, which are interpreted strictly). §19.81(1) & (4). The law further provides that sessions must generally be open to the public. §19.83(1). In light of these provisions, the exemptions in §19.85 that allow closed sessions must be interpreted strictly and narrowly, rather than broadly[17]. Any doubt as to the applicability of an exemption or, if an exemption applies, the need to close the session should be resolved in favor of openness. A closed session may be held only for one or more of the 13 specified statutory exemptions to the requirement that meetings be held in open session. The following 7 exemptions (B—J) are of interest to local government bodies.

B. "Case" deliberations. Deliberating on a case which was the subject of a quasi-judicial hearing. §19.85 (1)(a). Note: this exemption should seldom be used in light of the narrow judicial interpretation given to it[18].

C. Employee discipline; licensing; tenure. Considering dismissal, demotion, licensing, or discipline of a public employee or licensee, the investigation of charges against such person, considering the grant or denial of tenure, and the taking of formal action on any of these matters. The employee or licensee may demand that a meeting that is an evidentiary hearing or a meeting at which final action may be taken under this exemption be held in open session. Employees and licensee must be given actual notice of such hearing or meeting and their right to demand an open session. §19.85 (1)(b). If this demand is made, the session must be open.

D. Employee evaluation. Considering employment, promotion, compensation or performance evaluation data of an employee. §19.85 (1)(c).

E. Criminal matters. Considering specific applications of probation or parole, or strategy for crime prevention or detection. §19.85 (1)(d).

F. Purchases; bargaining. Deliberating or negotiating the purchase of public property, investment of public funds, or conducting other specified public business when competitive or bargaining reasons require a closed session. §19.85 (1)(e).

G. Burial sites. Deliberating on a burial site if discussing in public would likely result in disturbance of the site. §19.85 (1)(em).

H. Damaging personal information. Considering financial, medical, social or personal histories or disciplinary data of specific persons, preliminary consideration of specific personnel problems or the investigation of charges against specific persons, except where the subject's right to open the meeting (item C above) applies. This exemption may be used only if public discussion would be likely to have a *substantial adverse effect* on the reputation of the person involved. §19.85 (1)(f). Note that this exemption applies to "specific persons" rather than the narrower class of public employee or licensees (item C above.)

I. Legal consultation. Conferring with legal counsel about strategy regarding current or *likely* litigation. §19.85 (1)(g).

J. Confidential ethics opinion. Considering a request for confidential written advice from a local ethics board. §19.85 (1)(h).

CONDUCTING PERMITTED CLOSED SESSIONS

A. Public notice. Notice of a contemplated closed session must describe the subject matter and should specify the specific statutory exemption(s) allowing closure. §19.84(2) & 19.85(1).

B. Convening in open session. The body must initially convene in open session. §19.85(1)(intro.).

C. Procedure to close. To convene in closed session, the body's presiding officer must announce in open session, prior to the vote, the nature of the business to be considered in closed session and the specific statutory exemption(s) allowing closure. This announcement must be made part of the record. A motion to go into closed session must be made and a vote taken so

that the vote of each member can be determined. §19.85(1)(intro.). The motion, second and vote must likewise be made a part of the record.

D. Limits on reconvening in open session. Once a body convenes in closed session it may not reconvene in open session for at least 12 hours, *unless* public notice of its intent to return to open session was given in the original notice of the meeting. §19.85(2).

E. Unanticipated closed session. The body may go into an unanticipated closed session, if the need arises, on an item specified in the public notice[19]. In such case, the closed session item should be placed at the end of the agenda because the body cannot reconvene in open session without having given prior public notice. This provision on unanticipated closed sessions is very narrow. Whenever time allows, the 24-hour notice provision must be followed, or, at a minimum, when there is good cause, the 2-hour notice can be used to give an amended notice of the meeting indicating a closed session on an item that was not previously anticipated.

F. Recording actions. As with open sessions, motions and votes made in closed session must be recorded. §19.88. Whenever feasible, votes should be taken in open session.

G. Matters considered. The body may consider only the matter(s) for which the session was closed. §19.85(1)(intro.).

VOTING & RECORDS

A. Requiring recording of each member's vote. A member of a governmental body may require that each member's vote be ascertained and recorded. §19.88(2).

B. Recording votes; Public Records Law applicability. In general, motions, seconds and any roll call votes must be recorded, preserved and made available to the extent prescribed in the Public Records Law (§§19.32-19.39). §19.88. Vote results, even if not by roll call, should likewise be recorded. Certain statutes may require that each member's vote be recorded. For example, motions, seconds and the votes of each member to convene in closed session must be recorded. §19.85(1). In addition, various provisions outside of the Open Meetings Law require keeping minutes of proceedings[20].

C. Narrow secret ballot exception. Although secret ballots are generally prohibited under the Open Meetings Law, a narrow exception allows a governmental body to use secret ballots to elect the body's officers. §19.88(1). For example, a city council may so elect its president and a committee may so elect its chair (unless the chair is otherwise designated). This narrow exception does not allow secret balloting to fill offices of the governmental unit, such as vacancies in the office of chief executive officer or on the governing body.

SUBUNITS

§19.84(6)

A. Definition. Subunits are created by the parent body and consist only of members of the parent body[21].

B. Applicability of Open Meetings Law; exceptions

1. Generally, meetings of subunits are subject to the advance public notice requirements of the law.

2. However, a subunit, such as a committee of a governing body, may meet without prior public notice during the parent body's meeting, during its recess or immediately after the meeting to discuss noticed subjects of the parent body's meeting.

C. Procedure. To allow the subunit to meet without prior public notice, the presiding officer of the *parent body* must publicly announce the time, place and subject matter (including any contemplated closed session) of the subunit in advance at the meeting of the parent body.

D. Attendance at closed sessions. Members of the parent body may attend closed sessions of a subunit unless the rules of the parent body provide otherwise. §19.89.

PENALTIES & ENFORCEMENT

§§19.96 & 19.97

A. Coverage. All members of a governmental body are subject to the law's penalty provisions. E.g., if a committee consists of two governing body members and one citizen member, the law applies to the citizen member just as it does to the other members.

B. Penalties; liability

1. Forfeitures; personal liability. Forfeitures ($25-$300) can be levied against governmental body members who violate the Open Meetings Law. No reimbursement for forfeitures is allowed.

2. Voiding actions. A court may void any actions taken by the governmental body at a meeting in violation of the Open Meetings Law.

3. Prevention & self-protection. Media and persons unhappy with actions of the body are the ones most likely to bring complaints of Open Meetings Law violations. Members can prevent problems by making sure, at the beginning of a meeting, that the meeting was properly noticed. Members should also be sure that topics considered were specified in the notice (unless they are brought up under the public comment agenda item[22]) and that proper procedures for closed meetings are followed. Useful protection can come from a clerk's log documenting proper notice, particularly when shorter notice is given or the notice is amended. Members can protect themselves from personal liability by voting to prevent violations, such as by voting against going into an improper closed session. However, if a meeting goes forward over a member's motion or vote in objection, the objecting member may still participate in the meeting.

C. Bringing an enforcement action. A person may file a verified complaint (see following heading) with the district attorney (DA) to enforce the Open Meetings Law. If the DA does not begin an action within 20 days, the person may bring the action and receive actual costs and reasonable attorney fees if he or she prevails. The attorney general (AG) may also enforce the law, but these matters are almost always viewed as local matters, for the DA to enforce, rather than of statewide concern appropriate for the AG.

REFERENCE & ADVICE

Refer to §§19.81-19.98 of the *Wisconsin Statutes* for the specific wording of the law; the statutes may be accessed on the internet at http://folio.legis.state.wi.us/. Advice on the Open Meetings

Law is available from the county corporation counsel, municipal attorney or the Wisconsin Department of Justice. *Wisconsin Open Meetings Law, A Compliance Guide (2001)*, by the Wisconsin Department of Justice, may be found on the internet at http://www.doj.state.wi.us/dls/spar.asp. This guide contains a copy of a verified complaint. The Local Government Center has videotapes on the law, available through county Extension offices. On the internet, go to http://www.uwex.edu/lgc/, click on "Publications" and scroll down to "Video Tapes" for information on ordering.

---

[1] 78 *Op. Att'y Gen.* 67 (1989).
[2] 66 *Op. Att'y Gen*. 113 (1977).
[3] 80 *Op. Att'y Gen* 129 (1991).
[4] In 80 *Op. Att'y Gen* 129 (1991), the attorney general opined that the Milwaukee Economic Development Corporation was a "quasi-governmental corporation" under the law. It was created by two private citizens and a public employee. Factors important in the determination included: the bylaws required 4 of 9 directors to be city officials; the city appointed the corporation's officers; and the corporation was located in a city building, used city equipment and was staffed by city employees.
[5] *State v. Swanson*, 92 Wis.2d 310 (1979), 78 *Op. Att'y Gen*. 67 (1989).
[6] *State ex rel. Newspapers, Inc. v. Showers*, 135 Wis.2d 77, 102 (1987); *State ex rel. Badke v. Village Board of the Village of Greendale*, 173 Wis.2d 553 (1993).
[7] This was the situation in the *Showers* case, above.
[8] *Showers,* 135 Wis.2d at 92, 100 (quoting *State ex. rel. Lynch v. Conta*, 71 Wis.2d 662, 687 (1976)).
[9] 69 *Op. Att'y Gen*. 143 (1980).
[10] See the *Compliance Guide*, p. 6, cited above under "Reference & Advice."
[11] *Badke*, 173 Wis.2d 553, 561.
[12] *Badke*, 173 Wis.2d 553, 580-81.
[13] 66 *Op. Att'y Gen*. 93 (1977).
[14] 66 *Op. Att'y Gen*. 230, 231 (1977); *Martin v. Wray*, 473 F. Supp. 1131 (E.D. Wis. 1979).
[15] 65 *Op. Att'y Gen*. Preface (1976).
[16] 63 *Op. Att'y Gen.* 509 (1974).
[17] *State ex rel. Hodge v. Town of Turtle Lake*, 180 Wis.2d 62, 70 (1993).
[18] See *Hodge,* above.
[19] 66 *Op. Att'y Gen*. 106 (1977).
[20] See, e.g., §§59.23(2)(a), 61.25(3) & 62.09(11)(b) requiring county, village and city clerks to keep a record of proceedings of their respective governing bodies.
[21] 74 Op. Att'y Gen. 38 (1985).
[22] §§19.83(2) & 19.84(2). See brief discussion under "Notice & Access" at F. 5.

Prepared by James H. Schneider, J. D., Local Government Center. Thanks to reviewers Claire M. Silverman, J. D., League of Wisconsin Municipalities; and David G. Hinds (retired), Local Government Center.

Local Government Center
University of Wisconsin-Extension
610 Langdon Street, 229 Lowell Center
Madison, WI 53703

Phone (608) 262-9961
Fax (608) 265-8662
www.uwex.edu/lgc/

Appendix H

Notice Requirements Summary Table

Notice Requirements Summary Table

Activity	Type of Notice
Annual inspection	Class 2 Notice[1]
Annual report meeting	Class 2 Notice[1] with mailing[2]
Activities outside corridor	Telephone/Mail/In Person/Posting[4]
Activities within corridor: Depositing/Excavating/Cutting trees >6 in. All other activities	 Telephone/Mail/In Person/Posting[4] No notice required.
Construction costs >$10,000	Class 2 Notice[1]
County drainage board hearing	Class 3 Notice[1] with mailing[3]
County drainage board business meeting	Minimum 24-hour notice[5]
Specifications review meeting:	Class 2 Notice[1] with mailing[2]
Compliance plan review meeting:	Class 2 Notice[1] with mailing[2]
County drainage board rules or orders	Class 1 Notice[1]; Served on individuals
Storm inspection (No notice required in district corridors.)	Telephone/Mail/In Person/Posting[4]

[1]See Chapter 985, *Publication of Legal Notices; Public Newspapers; Fees*, Wis. Stats.
Class 1 Notice: Requires one insertion in the official county newspaper.
Class 2 Notice: Requires two insertions in the official county newspaper.
Class 3 Notice: Requires three insertions in the official county newspaper.

[2]Notice of the public meeting must also be mailed to all known landowners in the affected drainage district.

[3]Notice must also be mailed to the county highway committee chairperson or county highway commissioner, county land conservation committee chairperson, DNR secretary, and the department. Generally, notice must also be mailed to all landowners in the district, or all landowners possibly affected by the proposed action. All mortgagees of lands affected must also receive notice if the hearing involves creation of a district or annexation of lands. The county drainage board must allow 20 days to review documents that will be discussed.

[4]Notice may be given any time prior to entry.

[5]Meetings of the county drainage board should generally be planned enough in advance to provide adequate time to publish or post notice reasonably likely to inform interested parties, and provide them an opportunity to review any documents that will be discussed by the county drainage board.

Appendix I

Cheat Sheets

DRAINAGE DISTRICT NO. ___ or

_____ DRAINAGE DISTRICT

ANNUAL REPORT

The _____ County Drainage Board submits the following annual report for the above identified drainage district for the 12-month period ending August 31, 20__.

Submit one form for each drainage district in your jurisdiction. Attach Annual Inspection Report, major storm reports, and/or other inspection reports performed by the drainage board in the past 12 months.

I. Financial Statement	DEBITS	CREDITS
Starting Balance on Sept. 01, _____		
Assessments Collected		
Interest Earned on Assessments		
Interest Earned on Borrowed Funds		
Other Receipts		
TOTAL OF ALL RECEIPTS		
Amounts Paid Out for District Activities		
Amounts Paid Out to Repay Loans or Bonds		
Other Payables		
TOTAL OF ALL EXPENDITURES		
Ending Balance on 08/31/__ (receipts minus expenditures):		
Uncollected Assessments		

II. The following bonds have been issued or paid during the preceding 12 months:

III. The following work has been performed during the preceding year:

(Use the reverse of this sheet to complete this section, if more space is needed. Extra sheets may also be attached.)

A. Project Description:

B. Location of Project:

C. Cost of Project:

I certify that the information contained in this annual report is true.

Signature of Drainage Board Chair:	DATE:
Printed Name of Drainage Board Chair:	

NOTE: Submit the original of this report to DATCP; send one copy of this report to your county zoning administrator; and file another with the drainage board secretary.

_____COUNTY'S INSPECTION REPORT

1. Type of Inspection (circle that which applies): Annual, Major Storm, Site

2. Date of Inspection: _____

3. Drainage District Name or Number: _____

4. Location of Damage or Complaint: T ___ N R ___ E Section
(Attach USDA Farm Service Agency aerial photo with site identified in red)

5. Name of person(s) making complaint or accompanying the inspection:

_____

_____

_____

6. Description of Damage (attach additional sheets, if needed):

_____

_____

_____

_____

_____

_____

7. Repairs Proposed or Action to be Taken by Board (attach additional sheets, if needed):

_____

_____

_____

_____

_____

_____

_____

8. Inspector(s):

Print Name: _____ _____ _____

Signature: _____ _____ _____

SIGN IN
(please print)

NAME	MAILING ADDRESS	TELEPHONE NUMBER
1		
2		
3		
4		
5		
6		
7		
8		
9		
10		
11		
12		
13		
14		
15		
16		

CERTIFICATION

I, _____, hereby certify that I am _____of the _____, and that the photocopies of the enclosed information has been compared by me with the originals on file and are true copies thereof.

Dated at_____, Wisconsin, this _____ day of _____, _____.

_____

Subscribed and sworn to before me this
_____ day of _____, _____.

_____
Notary Public, State of Wisconsin
My Commission Expires: _____

I:\Common\Forms\Certification for Open Records

Appendix J

DATCP Approved List of Drainage Engineers

First Name	Last Name	Work Phone	Firm Name	Firm Address	Firm City	ST	Zip
LEE	BARTLETT	(608) 576-2041		5506 MEADOWOOD DR	MADISON	WI	53711
DEBORAH	BESSER	(715) 235-6161		N4320 494TH ST	MENOMONIE	WI	54751
DAVID	BROBERG	(414) 475-2464		W132N11533 FOREST DR	GERMANTOWN	WI	53022
EDGAR	HARVEY JR	(920) 528-7071		N3635 TIMBERVIEW RD	WALDO	WI	53093
PAUL	JOHNSON	(262) 542-4610		1608 MICHAEL DR	WAUKESHA	WI	53189
KENNETH	KALSCHEUR	(920) 682-4167		901 SHOREWOOD BLVD	MANITOWOC	WI	54220
ROBERT	LINKE	(414) 962-5007		5967 N BERKELEY BLVD	MILWAUKEE	WI	53217
JEROME	LOPAS	(920) 749-9486		W6362 RAVINE CT	MENASHA	WI	54952
TODD	MATHESON	(608) 246-5441		3520 SKY TER	DEERFIELD	WI	53531
WILLIAM	MC COY	(608) 326-6013		620 S BUCHANAN ST	PRAIRIE DU CHIEN	WI	53821
STEPHEN	NAPP	(608) 822-3853		12474 US HIGHWAY 61	FENNIMORE	WI	53809
D	NAPP	(608) 943-6326		3885 FENNIMORE LIBERTY RD	STITZER	WI	53825
ALAN	OLSON	(608) 378-4053		W3123 OLSON RD	WARRENS	WI	54666
DAVID	QUAM	(608) 274-8055		5758 RESTAL ST	FITCHBURG	WI	53711
DAVID	SIMON			1240 CLEVELAND AVE	WEST RACINE	WI	53405
PHILIP	SMITH	(608) 526-3237		304 PARK ST	HOLMEN	WI	54636
JOHN	STOLTENBERG	(920) 876-2184		N8362 STATE HIGHWAY 67	ELKHART LAKE	WI	53020
JAMES	VOBORSKY	(715) 282-5709		2875 S RIFLE RD	RHINELANDER	WI	54501
MICHAEL	WEISLING	(414) 461-9756		5726 N 38TH ST	MILWAUKEE	WI	53209
MARK	BLASKEY	(715) 839-7700	ABACUS CONSULTING INC	2411 N HILLCREST PKWY STE 11	ALTOONA	WI	54720
MARY	MARUSICH	(715) 682-7187	ABDI-LCD	2014 W THIRD ST PO Box 267	ASHLAND	WI	54806
THOMAS	HUBBARD	(715) 232-8490	AC/A INC	406 TECHNOLOGY DR E STE A	MENOMONIE	WI	54751
JACK	SURIANO	(920) 856-6949	AIR ENVIRONMENTAL CO	RT 1 PO Box 306	FORESTVILLE	WI	54213
DANIEL	FRIGGE		AMERICAN SURVEY COMPANY INC	12207 HIGHWAY K	FRANKSVILLE	WI	53126
KEITH	CORSO	(847) 265-7325	APPLIED TECHNOLOGIES INC	16815 W WISCONSIN AVE	BROOKFIELD	WI	53005
MICHELE	KLAPPA-	(414) 764-9865	APPLIED TECHNOLOGIES INC	16815 W WISCONSIN AVE	BROOKFIELD	WI	53005
ROBERT	DOREN	(262) 784-7690	APPLIED TECHNOLOGY	16815 W WISCONSIN AVE	BROOKFIELD	WI	53005
DONALD	PAULSON	(608) 271-9651	ARNOLD & O'SHERIDAN INC	1111 DEMING WAY	MADISON	WI	53717
STEVE	WHAYLAND	(608) 271-9651	ARNOLD & O'SHERIDAN INC	1111 DEMING WAY	MADISON	WI	53717
ARTHUR	DESROSIERS	(715) 682-2537	ARTHUR J DESROSIERS PE RLS	117 MAIN ST E	ASHLAND	WI	54806
WILLIAM	AULT	(262) 567-0853	AULT ENGINEERING INC	N7928 GREEN TREE LN	OCONOMOWOC	WI	53066
LARRY	AUSTIN	(608) 723-6363	AUSTIN ENGINEERING LLC	RR2 BOX 4211 HWY 81	LANCASTER	WI	53813
CHARLES	CHRISTENSEN	(920) 498-1200	AYRES ASSOCIATES	916 WILLARD DR STE 200	GREEN BAY	WI	54304
EARL	HOLZMAN	(715) 834-3161	AYRES ASSOCIATES	3433 OAKWOOD HILLS PKWY PO Box 1590	EAU CLAIRE	WI	54702
FRED	KLINGBEIL	(608) 443-1200	AYRES ASSOCIATES	1802 PANKRATZ ST	MADISON	WI	53704
JAMES	BAKKEN	(715) 834-3161	AYRES ASSOCIATES INC	3266 115TH ST PO Box 1590	EAU CLAIRE	WI	54702

PETER	AKMENTINS	(920) 766-3521	BAISCH ENGINEERING INC	809 HYLAND AVE PO Box 440	KAUKAUNA	WI	54130
MARK	KOLCZASKI	(262) 763-7834	BAXTER & WOOMAN INC	256 S PINE ST	BURLINGTON	WI	53105
ARCHIE	BECHER	(715) 845-8000	BECHER-HOPPE ASSOCIATES INC	330 4TH ST PO Box 8000	WAUSAU	WI	54402
TERRY	KITTSON	(715) 845-8000	BECHER-HOPPE ASSOCIATES INC	330 4TH ST PO Box 8000	WAUSAU	WI	54402
JOHN	BELKER	(608) 837-0976	BELKEN ENGINEERING INC	1840 ESSEX DR	SUN PRAIRIE	WI	53590
JOHN	ROLL	(414) 771-3390	BLOOM CONSULTANTS	10201 W INNOVATION DR STE 200	MILWAUKEE	WI	53226
DAVE	ANDRUEZYK	(262) 241-6962	BONESTROO ROSENE ANDERLIK & ASSOC	1516 W MEQUON RD	MEQUON	WI	53092
DON	GARVES	(262) 241-4466	BONESTROO ROSENE ANDERLIK & ASSOC	1516 W MEQUON RD	MEQUON	WI	53092
ALLAN	SCHMIDT	(262) 241-6945	BONESTROO ROSENE ANDERLIK & ASSOC	1516 W MEQUON RD	MEQUON	WI	53092
LARRY	BREWSTER	(608) 742-3803	BREWSTER & ASSOCIATES	3023 CTH CX PO Box 464	PORTAGE	WI	53901
MARK	HUBER	(608) 224-2830	BT SQUARED INC	2830 DAIRY DR	MADISON	WI	53718
JAN	KUCHER	(608) 224-2830	BT SQUARED INC	2830 DAIRY DR	MADISON	WI	53718
DEBRA	NELSON	(608) 224-2830	BT SQUARED INC	2830 DAIRY DR	MADISON	WI	53718
BETSY	POWERS	(608) 224-2830	BT SQUARED INC	2830 DAIRY DR	MADISON	WI	53704
TIM	RYAN	(608) 224-2839	BT2 INC	2830 DAIRY DRIVE	MADISON	WI	53718
ROBERT	HACKEL	(920) 565-6200	BUTEYN PETERSON CONSTRCTN CO	N7337 DAIRYLAND DR	SHEBOYGAN	WI	53083
JIMMY	ROLAND	(414) 291-5100	CAMP DRESSER & MC KEE INC	312 E WISCONSIN AVE STE 500	MILWAUKEE	WI	53202
RUSSELL	KIVINIEMI	(715) 235-9081	CEDAR CORPORATION	604 WILSON AVE	MENOMONIE	WI	54751
JAY	KNOKE	(715) 359-9400	CENTRAL WIS ENGR & ARCHT INC	5707 SCHOFIELD AVE	WESTON	WI	54476
DENNIS	NELSON	(414) 286-3295	CITY OF MILW DEPT OF PUBLIC WORKS	841 N BROADWAY RM 602	MILWAUKEE	WI	53202
GUY	KOLBERG	(608) 837-3050	CITY OF SUN PRAIRIE DEPT OF ENGR	300 E MAIN ST	SUN PRAIRIE	WI	53590
JAMES	HOWLEY	(715) 342-1999	CIVIL PROFESSIONAL CONSULTANTS	2925 POST RD	STEVENS POINT	WI	54481
RAY	POLKINGHORN	(262) 657-1550	CLARK DIETZ INC	4235 GREEN BAY RD STE 200	KENOSHA	WI	53144
CLEVELAND	GOMBAR	(608) 835-5742	CLEVELAND F GOMBAR P E	5581 RALPH ROAD	OREGON	WI	53575
DAVID	WENTLAND	(923) 337-0349	COASTAL PLANNING & DESIGN INC	849 CORMIER RD	GREEN BAY	WI	54304
ANDREW	BLYSTRA	(414) 769-8925	COLLINS ENGINEERS INC	6020 S PACKARD AVE	CUDAHY	WI	53110
TERENCE	BROWNE	(414) 769-8925	COLLINS ENGINEERS INC	6020 S PACKARD AVE	CUDAHY	WI	53110
MICHAEL	RYAN	(608) 752-0138	CONCRETE STRUCTURES INC	3006 BOND PL	JANESVILLE	WI	53545
DANIEL	CARTHEL	(715) 234-0516	COOPER ENGINEERING	310 W SOUTH ST	RICE LAKE	WI	54868
LOREN	CRAKER	(715) 445-4864	CRAKER ENGINEERING	N7214 OAKRIDGE RD	IOLA	WI	54945
WILLIAM	SASSE	(262) 554-8530	CRISPELL SNYDER INC	6011 DURAND AVE STE 500	RACINE	WI	53406
JAMES	JENSEN	(414) 723-5600	CRISPELL-SNYDER INC	700 GENEVA PKWY N PO Box 550	LAKE GENEVA	WI	53147
JEFFREY	SEITZ	(414) 723-5600	CRISPELL-SNYDER INC	114 W COURT ST PO Box 550	LAKE GENEVA	WI	53147
DENNIS	GREEN	(920) 748-9696	D M GREEN & ASSOC INC	N5701 LAKEVIEW DR PO Box 386	RIPON	WI	54971
JEREMY	BALOUSEK	(608) 224-3747	DANE COUNTY LAND CONSERVATION	1 FEN OAK CT ROOM 208	MADISON	WI	53718
JOHN	DAVEL	(920) 991-1866	DAVEL ENGINEERING LLC	1811 RACINE ST	MENASHA	WI	54952
DAN	UHL	(608) 782-3130	DAVY ENGINEERING CO	115 S 6TH ST PO Box 2076	LA CROSSE	WI	54602

DENNIS	DELONAY	(715) 355-5209	DENNIS DESIGN SERVICE	1405 HOLLIBUSH LN	WAUSAU	WI	54401
DENNIS	BEGALKE	(715) 835-0705	DENNIS R BEGALKE CONSULT.	1814 SKEELS AVE	EAU CLAIRE	WI	54701
SHARAD	MOHOLKAR	(262) 521-5364	DEPT OF TRANSPORTATION	141 NW BARSTOW ST	WAUKESHA	WI	53188
DANIEL	PRUNUSKE	(920) 887-3128	DESIGNTECH ENGINEERING LLC	910 GROVE ST PO Box 293	BEAVER DAM	WI	53916
SCOTT	SCHRAMM	(920) 208-0296	DONAHUE & ASSOCIATES	4343 SOUTH TAYLOR DR	SHEBOYGAN	WI	53081
TAMMY	KUEHLMANN	(920) 208-0296	DONOHUE & ASSOCIATES	4343 S TAYLOR DR	SHEBOYGAN	WI	53081
JOHN	FERRIS	(414) 225-5100	EARTH TECH	1020 N BROADWAY STE 400	MILWAUKEE	WI	53202
CHUCK	BOEHM	(414) 225-5102	EARTH TECH INC	1020 N BROADWAY STE 400	MILWAUKEE	WI	53202
ROBERT	CARR	(414) 225-5135	EARTH TECH INC	1020 N BROADWAY STE 400	MILWAUKEE	WI	53202
THOMAS	DEGEN	(715) 342-3031	EARTH TECH INC	200 INDIANA AVE	STEVENS POINT	WI	54481
MARK	DUMMANN	(414) 225-5137	EARTH TECH INC	1020 N BROADWAY STE 400	MILWAUKEE	WI	53202
JAREN	HILLER	(414) 225-5138	EARTH TECH INC	1020 N BROADWAY STE 400	MILWAUKEE	WI	53202
PATRICK	RIES	(920) 451-2458	EARTH TECH INC	4738 N 40TH ST	SHEBOYGAN	WI	53083
RANDY	VIDEKOVICH	(414) 225-5149	EARTH TECH INC	1020 N BROADWAY STE 400	MILWAUKEE	WI	53202
V	PFANKU	(608) 522-3672	EIC	306 S MAPLE ST	NORTH FREEDOM	WI	53951
KEITH	KOSBAU	(414) 347-1607	EMCS DESIGN GROUP	205 W HIGHLAND AVE STE 501	MILWAUKEE	WI	53203
DEAN	SCHMITZ	(414) 347-1607	EMCS DESIGN GROUP	205 W HIGHLAND AVE STE 501	MILWAUKEE	WI	53203
RICHARD	STRASSMAN	(414) 744-1913	ENGINEERING ARBITERS	2582 S SOURE DR	MILWAUKEE	WI	53207
JAY	DIEBOLD	(262) 549-6898	ENVIROGEN INC	2835 NORTH GRANDVIEW BLVD PO Box 90	PEWAUKEE	WI	53072
PHILLIP	EPPING	(715) 743-4681	EPPING ENGRG & SURVEYING INC	PO Box 125	NEILLSVILLE	WI	54456
MATTHEW	CLEMENTI	(920) 926-9800	EXCEL ENGINEERING INC	100 CAMELOT DR	FOND DU LAC	WI	54935
RONALD	CUNZENHEIM	(920) 926-9800	EXCEL ENGINEERING INC	100 CAMELOT DR	FOND DU LAC	WI	54935
PAUL	SANDERS	(920) 296-9800	EXCEL ENGINEERING INC	100 CAMELOT DR	FOND DU LAC	WI	54935
MARTIN	CIESLIK	(608) 232-4403	FOTH & VAN DYKE	1402 PANKRATZ ST #300	MADISON	WI	53711
JAMES	KOSKINIEMI	(608) 232-4408	FOTH & VAN DYKE	1402 PANKRATZ ST #300	MADISON	WI	53711
MICHAEL	LIEBMAN	(920) 496-6765	FOTH & VAN DYKE	2737 SOUTH RIDGE RD PO Box 19012	GREEN BAY	WI	54307
DANIEL	MUNDT	(920) 497-2500	FOTH & VAN DYKE ASSOC INC	2737 S RIDGE RD PO Box 19012	GREEN BAY	WI	54307
JAMES	LUND	(608) 836-1500	GANNETT FLEMING INC	8025 EXCELSLIOR DR	MADISON	WI	53717
JERRY	FOELLMI	(608) 742-2169	GENERAL ENGINEERING CO	412 E SLIFER ST PO Box 340	PORTAGE	WI	53901
GERALD	DREWES	(262) 966-9702	GERALD A DREWES P E	3511 W FIVE MILE RD	CALEDONIA	WI	53108
DENNIS	CHRISTIE	(920) 592-9440	GRAEF ANHALT & SCHLOEMER	1150 SPRINGHURST DR STE 201	GREEN BAY	WI	54304
DANIEL	COOK	(414) 262-9092	GRAEF ANHALT & SCHLOEMER INC	125 S 84TH ST #401	MILWAUKEE	WI	53214
PAUL	EIRING	(414) 259-1500	GRAEF ANHALT & SCHLOEMER INC	125 S 84TH ST #401	MILWAUKEE	WI	53214
MARK	LILLEGARD	(414) 259-1500	GRAEF ANHALT & SCHLOEMER INC	125 S 84TH ST #401	MILWAUKEE	WI	53214
JOHN	MC CARTHY	(414) 259-1500	GRAEF ANHALT & SCHLOEMER INC	125 S 84TH ST #401	MILWAUKEE	WI	53214
THOMAS	LANSER	(920) 924-5720	GREMMER & ASSOC INC	93 SOUTH PIONEER RD SUITE 300	FOND DU LAC	WI	54935
DAVID	GLODOWSKI	(715) 341-4363	GREMMER & ASSOCIATES	2546 POST RD	PLOVER	WI	54467

ANDREW	KLEMP	(920) 924-5720	GREMMER & ASSOCIATES	93 S PIONEER RD STE 300	FOND DU LAC	WI	54935
GERARD	GRISWOLD	(262) 637-1657	GRISWOLD ENGINEERING	3518 TWIN LN	RACINE	WI	53406
CRAIG	HARDY	(920) 685-0680	HARDY GEO-TECH INC	952 WILLOW ST PO Box 15	OMRO	WI	54963
TIMOTHY	HAYES	(414) 963-9777	HAYES ENGINEERING CO SC	4513 N MURRAY AVE	MILWAUKEE	WI	53211
MIKE	HESS	(715) 674-5700	HESS ENGINEERING	3515 USH 8	CAVOUR	WI	54511
CYNTHIA	DEBRUINE	(262) 796-0440	HEY & ASSOCIATES INC	240 REGENCY CT STE 301	BROOKFIELD	WI	53045
TRACY	PINKOWSKI	(262) 796-0440	HEY & ASSOCIATES INC	240 REGENCY CT STE 301	BROOKFIELD	WI	53045
GARY	RAASCH	(262) 796-0440	HEY & ASSOCIATES INC	240 REGENCY CT STE 301	BROOKFIELD	WI	53045
GERALD	DEMERS	(262) 792-1282	HIS GEO TRANS	175 N CORPORATE DR STE 100	BROOKFIELD	WI	53045
TONYA	WAGNER	(920) 380-2132	HOFFMAN CORPORATION	N434 GREENVILLE CTR PO Box 8034	APPLETON	WI	54912
RANDY	SURBAUGH	(651) 644-4389	HOWARD R GREEN CO	1326 ENERGY PARK DR	ST PAUL	MN	55108
ROGER	HUMPHREY	(715) 698-3440	HUMPHREY ENGINEERING INC	145 S MAIN ST PO Box 252	WOODVILLE	WI	54028
MICHAEL	JONSEN	(608) 748-4305	IIW ENGINEERS & SURVEYORS P C	1638 THOMAS ST	HAZEL GREEN	WI	53811
MARK	KJORLIE	(920) 766-8410	INTRNTL PAPER KAUKAUNA MILL	1019 OVIATT ST PO Box 600	KAUKAUNA	WI	54130
JAMES	ARTHUR	(920) 922-5703	J E ARTHUR & ASSOCIATES INC	548 PRAIRIE RD PO Box 1779	FOND DU LAC	WI	54936
JOSEPH	BUKOVICH	(262) 542-5797	JAHNKE & JAHNKE ASSOC INC	711 W MORELAND BLVD	WAUKESHA	WI	53188
FRANK	NESS	(608) 588-7484	JEWELL & ASSOC INC	801 TRAVIS ST PO Box 995	SPRING GREEN	WI	53588
JOHN	GRIFFIN	(715) 478-5643	JOHN P GRIFFIN CONSULTING LLC	3552 STATE HIGHWAY 55 PO Box 242	CRANDON	WI	54520
SYED	IHTHESHAMUDDIN	(414) 351-6668	KAPUR & ASSCOCIATES INC	7711 N PORT WASHINGTON RD	MILWAUKEE	WI	53217
PRASAD	NARAYAN	(414) 351-6668	KAPUR & ASSOCIATES	7711 N PORT WASHINGTON RD	MILWAUKEE	WI	53217
THOMAS	WAGNER	(414) 351-6668	KAPUR & ASSOCIATES	7711 N PORT WASHINGTON RD	MILWAUKEE	WI	53217
TIMOTHY	ANHEUSER	(414) 351-6668	KAPUR AND ASSOCIATES INC	7711 N PORT WASHINGTON RD	MILWAUKEE	WI	53217
ELIZABETH	KLEMANN	(414) 351-6668	KAPUR AND ASSOCIATES INC	7711 N PORT WASHINGTON RD	MILWAUKEE	WI	53217
DREW	TIMMERMAN	(414) 351-6668	KAPUR AND ASSOCIATES INC	7711 N PORT WASHINGTON RD	MILWAUKEE	WI	53217
KEITH	RHODES	(920) 582-7737	KHORD	6829 SUNSET TRL	WINNECONNE	WI	54986
MIKE	BAKALARS	(608) 663-1218	KL ENGINEERING INC	5950 SEMINOLE CENTRE CT STE 200	MADISON	WI	53711
TODD	HERTZ	(608) 663-1218	KL ENGINEERING INC	5950 SEMINOLE CENTRE CT STE 200	MADISON	WI	53711
GERALD	SCHMITT	(608) 663-1218	KL ENGINEERING INC	5950 SEMINOLE CENTRE CT STE 200	MADISON	WI	53711
BASIL	ORECHWA	(920) 356-9447	KUNKEL ENGINEERING GROUP	107 PARALLEL ST	BEAVER DAM	WI	53916
FREDERICK	HILBY	(608) 782-3433	LA CROSSE ENGINEERING & SURVEYING INC	1206 S 3RD ST	LA CROSSE	WI	54601
KURT	ARENTSEN	(715) 424-3131	LAMPERT LEE & ASSOCIATES	10968 STATE HIGHWAY 54 EAST	WISCONSIN	WI	54494
LARRY	KOOPMAN	(715) 424-3131	LAMPERT LEE & ASSOCIATES	10968 STATE HIGHWAY 54 E	WISCONSIN	WI	54494
LARRY	KOOPMAN	(715) 424-3131	LAMPERT LEE & ASSOCIATES	10968 STATE HIGHWAY 54 E	WISCONSIN	WI	54494
BRIAN	BARTELS	(920) 429-0180	LANDS BEGINNING LLC	1130 REDWOOD DR	GREEN BAY	WI	54304
STEVEN	KAISER	(920) 734-9867	LARSON ENGRG OF WISCONSIN	1500 N CASALOMA DR STE 302	APPLETON	WI	54913
WILLIAM	HOFFMANN	(262) 377-0222	LOUIS C HOFFMANN & SON INC	9526 WESTERN AVE	CEDARBURG	WI	53012
WILLIAM	SULLIVAN	(262) 781-1686	MAKING THE GRADE INC	N48W14170 HAMPTON AVE	MENOMONEE	WI	53051

MICHAEL	SIEWERT	(920) 731-0381	MARTENSON & EISELE, INC.	1919 AMERICAN COURT	NEENAH	WI	54956
CARL	SUTTER	(920) 751-4200	MC MAHON ASSOCIATES INC	1445 MC MAHON DR	NEENAH	WI	54956
SCOTT	TARMANN	(262) 523-2040	MCLAREN HART INC	W239N2890 PEWAUKEE RD #D	PEWAUKEE	WI	53072
NICK	VANDE HEY	(920) 751-4200	McMAHON ASSOCIATES, INC.	1445 McMAHON DRIVE PO Box 1025	NEENAH	WI	54957
LEW	KOLLMANSBER	(608) 273-6380	MEAD & HUNT	6501 WATTS RD STE 101	MADISON	WI	53719
RUSSELL	CHESMORE	(608) 273-6380	MEAD & HUNT	6501 WATTS RD STE 101	MADISON	WI	53719
GLENN	KOEPP	(608) 273-6380	MEAD & HUNT	6501 WATTS RD STE 101	MADISON	WI	53719
TODD	BLOMSTROM	(608) 835-6363	MEAD & HUNT	6501 WATTS RD	MADISON	WI	53719
TIMOTHY	BUSCH	(920) 496-0500	MEAD & HUNT	1345 NORTH RD #B100	GREEN BAY	WI	54304
WILLIAM	BUTH	(608) 273-6380	MEAD & HUNT	6501 WATTS RD STE 101	MADISON	WI	53719
RYAN	FRISQUE	(920) 496-0500	MEAD & HUNT	1345 NORTH RD STE #B100	GREEN BAY	WI	54313
LAURA	MORLAND	(608) 273-6380	MEAD & HUNT	6501 WATTS RD	MADISON	WI	53719
KEVIN	SIELAFF	(920) 496-0500	MEAD & HUNT	1345 B NORTH RD	GREEN BAY	WI	54313
JEFFREY	BARCZAK	(414) 529-5380	METROPOLITAN SURVEY SERVICE	9415 W FOREST HOME AVE STE 202	HALES CORNERS	WI	53130
CLEMENT	SAFRANEK	(608) 356-2771	MID STATES & ASSOCIATES	1230 SOUTH BLVD	BARABOO	WI	53913
JILL	ORGAN	(414) 278-4819	MILW CO DPW ARCH & ENGR	907N10TH ST RM 303	MILWAUKEE	WI	53233
JOSEPH	WIECZOREK	(414) 278-4893	MILW COUNTY DEPT OF PUBLIC WORKS	907 N 10TH ST	MILWAUKEE	WI	53233
JOHN	MAAS	(414) 592-9606	MMA INC	2304 BEL-AIRE CT	GREEN BAY	WI	54304
LESLIE	BUSSE	(608) 231-4747	MONTGOMERY WATSON	ONE SCIENCE COURT PO Box 5385	MADISON	WI	53705
KEITH	GILKEY	(608) 231-4747	MONTGOMERY WATSON	ONE SCIENCE COURT PO Box 5385	MADISON	WI	53705
LARRY	GOTHAM	(715) 532-3721	MORGAN & PARMLEY LTD	115 W 2ND ST	LADYSMITH	WI	54848
CHARLES	BONGARD	(608) 356-2771	MSA PROFESSIONAL SERVICES	1230 SOUTH BLVD	BARABOO	WI	53913
GILBERT	HANTZSCH	(608) 356-2771	MSA PROFESSIONAL SERVICES	1230 SOUTH BLVD	BARABOO	WI	53913
MARK	HARNOIS	(800) 362-4505	MSA PROFESSIONAL SERVICES	1230 SOUTH BLVD	BARABOO	WI	53913
KATHERINE	KALSCHEUR	(800) 362-4505	MSA PROFESSIONAL SERVICES	1230 SOUTH BLVD	BARABOO	WI	53913
DAVID	KREITZMANN	(800) 362-4505	MSA PROFESSIONAL SERVICES	1230 SOUTH BLVD	BARABOO	WI	53913
MICHAEL	LAUE	(920) 887-4242	MSA PROFESSIONAL SERVICES	111 WARREN ST	BEAVER DAM	WI	53916
MICHAEL	MALONEY	(608) 242-7779	MSA PROFESSIONAL SERVICES	2917 INTERNATIONAL LN STE 202	MADISON	WI	53704
MARVIN	RUHLAND	(800) 362-4505	MSA PROFESSIONAL SERVICES	1230 SOUTH BLVD	BARABOO	WI	53913
BOYD	SCHLEICHER	(608) 242-7779	MSA PROFESSIONAL SERVICES	2917 INTERNATIONAL LN STE 202	MADISON	WI	53704
JOSEPH	COSTANZA	(608) 643-5329	MUNICIPAL ENGINEERING & INSP SERVICES	827 WATER ST	SAUK CITY	WI	53583
LAURIE	PARSONS	(262) 523-9000	NATURAL RESOURCE TECHLGY INC	N27W23713 W PAUL RD STE D	PEWAUKEE	WI	53072
JULIE	ZIMDARS	(262) 523-9000	NATURAL RESOURCE TECHLGY INC	N27W23713 PAUL RD STE D	PEWAUKEE	WI	53072
JAMES	BARBER	(262) 634-5588	NIELSEN MADSEN & BARBER S C	1339 WASHINGTON AVE PO Box 188	RACINE	WI	53401
WALTER	MADSEN	(262) 634-5588	NIELSEN MADSEN & BARBER S C	1339 WASHINGTON AVE PO Box 188	RACINE	WI	53401
MARK	MADSEN	(262) 634-5588	NIELSEN MADSEN & BARBER S C	1339 WASHINGTON AVE PO Box 188	RACINE	WI	53401
WILLIAM	NIEMI	(608) 592-5477	NIEMI ENGINEERING	N2171 LAKE DR	LODI	WI	53555

MARY	NORDIN	(715) 526-2827	NORDIN-PEDERSEN ASSOCIATES INC	N5841 STATE HIGHWAY 47-55	SHAWANO	WI	54166
RICK	NORRIS	(414) 246-6044	NORRIS & ASSOCIATES INC	735 N WATER ST STE 519	MILWAUKEE	WI	53202
GLEN	CLICKER	(608) 271-9687	NORTH STATES ENGINEERING LLC	5689 NUTONE ST	MADISON	WI	53711
DALE	BUSER	(262) 241-3133	NORTHERN ENVIRONMENTAL	1214 W VENTURE CT	MEQUON	WI	53092
JAMES	FILKINS	(715) 425-7631	OGDEN ENGINEERING CO INC	113 W WALNUT ST	RIVER FALLS	WI	54022
ROBERT	GIVENS	(920) 735-6900	OMNNI ASSOCIATES INC	1 SYSTEMS DR	APPLETON	WI	54914
JAMES	GRANT	(262) 544-9118	OSCAR J BOLDT CONSTRUCTION	N14W23777 STONE RIDGE DR STE 140	WAUKESHA	WI	53188
JOEL	PAPKE	(715) 884-2521	PAPKE ENGINEERING & SURVEYING	7968 UBINGER RD	PITTSVILLE	WI	54466
KURT	FEUERSTEIN	(414) 225-9800	PATRICK ENGINEERING INC	330 EAST KILBOURN AVE SUITE 1030	MILWAUKEE	WI	53202
JEFFERY	LAUBENHEIMER	(414) 225-9800	PATRICK ENGINEERING INC	330 EAST KILBOURN AVE SUITE 1030	MILWAUKEE	WI	53202
DAVID	LA FONTAINE	(715) 384-2133	PERRY-CARRINGTON ENG CORP	214 W 2ND ST	MARSHFIELD	WI	54449
RICHARD	NEBEL II	(920) 743-7856	R A NEBEL II ENGINEERING	3632 N DULUTH AVE	STURGEON BAY	WI	54235
LEONARD	ROECKER	(262) 679-5922	R A SMITH & ASSOC INC	16745 W BLUEMOUND RD	BROOKFIELD	WI	53005
THOMAS	LUDWIG	(262) 786-1777	R A SMITH & ASSOCIATES INC	16745 W BLUEMOUND RD	BROOKFIELD	WI	53005
WILLIAM	KIENBAUM	(608) 365-4464	R H BATTERMAN & CO	2857 BARTELLS DR	BELOIT	WI	53511
THOMAS	NEE	(608) 365-4464	R H BATTERMAN & CO INC	2857 BARTELLS DR	BELOIT	WI	53511
KENNETH	BAUMGARDT	(608) 643-4100	RAMAKER & ASSOCIATES INC	1120 DALLAS ST	SAUK CITY	WI	53583
DARYL	MATZKE	(608) 643-4100	RAMAKER & ASSOCIATES INC	1120 DALLAS ST	SAUK CITY	WI	53583
ARLEN	OSTRENG	(608) 643-4100	RAMAKER & ASSOCIATES INC	1120 DALLAS ST	SAUK CITY	WI	53583
ROXANNE	OSTRENG-JOHNSON	(608) 643-4100	RAMAKER & ASSOCIATES INC	1120 DALLAS ST	SAUK CITY	WI	53583
ALAN	TILLY	(920) 465-9477	RAYMOND D TILLY	285 CASTLE HIL LN	GREEN BAY	WI	54302
WILLIAM	MEYER	(715) 675-9784	REI CIVIL & ENVIRONMENTAL ENGINEERING	4080 N 20TH AVE	WAUSAU	WI	54401
ROBERT	POFAHL	(800) 501-8041	RESOURCE ENGINEERING ASSOCIATES INC	8505 UNIVERSITY GREEN STE 200	MIDDLETON	WI	53562
DANIEL	WIERZBA	(608) 831-6563	RESOURCE ENGINEERING ASSOCIATES INC	8505 UNIVERSITY GREEN STE 200	MIDDLETON	WI	53562
JOHN	MILLIGAN	(800) 501-8041	RESOURCE ENGRG ASSOC INC	8505 UNIVERSITY GREEN STE 200	MIDDLETON	WI	53562
DEAN	SYLLA	(920) 434-4505	RESOURCE TECHNOLOGY INC	1156 DAVID LN	GREEN BAY	WI	54313
MIKE	LEY	(920) 845-1042	RICE ENGINEERING INC	105 SCHOOL CREEK TR	LUXEMBURG	WI	54217
HOWARD	BARKER	(715) 848-1225	RIVER VALLEY TESTING CORP	4405 A STEWART AVE	WAUSAU	WI	54401
RICHARD	SWIONTEK	(920) 336-6368	ROBERT E LEE & ASSOCIATES INC	2825 S WEBSTER AVE	GREEN BAY	WI	54301
PAUL	VANHENKELUM	(262) 363-2004	RSV ENGINEERING INC	801 MAIN ST	MUKWONAGO	WI	53149
KURT	PEOT	(262) 542-5733	RUEKERT & MIELKE INC	W233 N2080 RIDGEVIEW PKWY	WAUKESHA	WI	53188
KENNETH	WARD	(262) 542-5733	RUEKERT & MIELKE INC	W233 N2080 RIDGEVIEW PKWY	WAUKESHA	WI	53188
DAVID	SIMONS	(651) 490-2066	SEH INC	3535 VADNAIS CENTER DR	ST PAUL	MN	55110
SHANNON	SMITH	(320) 229-4383	SEH INC	2100 25th AVE SOUTH	St CLOUD	MN	56301
GREGORY	BAER	(608) 274-2020	SHORT ELLIOTT HENDRICKSON INC	6418 NORMANDY LN STE 100	MADISON	WI	53719
CHRISTOPHER	BLUM	(608) 270-5354	SHORT ELLIOTT HENDRICKSON INC	6418 NORMANDY LN STE 100	MADISON	WI	53719
ROBERT	REDELINGS	(608) 270-5367	SHORT ELLIOTT HENDRICKSON INC	6418 NORMANDY LN STE 100	MADISON	WI	53719

ROBERT	STOCKBURGER	(715) 723-4856	SHORT ELLIOTT HENDRICKSON INC	421 FRENETTE DR	CHIPPEWA FALLS	WI	54729
JAMES	LEEDOM	(414) 768-7144	SIGMA DEVELOPMENT INC	220 E RYAN RD	OAK CREEK	WI	53154
PEG	WHITESIDE	(608) 849-4180	SOCON ENGINEERING INC	5799 RIVER RD	WAUNAKEE	WI	53597
PAUL	STEINBRECHER	(920) 684-5583	STEINBRECHER & MENUEAU INC	102 REVERE DR	MANITOWOC	WI	54220
JON	LINDERT	(608) 251-4843	STRAND & ASSOCIATES	910 W WINGRA DR	MADISON	WI	53715
TERRANCE	PETERSON	(920) 468-2978	STS CONSULTANTS LTD	1035 KEPLER DR	GREEN BAY	WI	54311
MICHAEL	RUETTEN	(920) 468-1978	STS CONSULTANTS LTD	1035 KEPLER DR	GREEN BAY	WI	54311
THOMAS	FLAHERTY	(715) 372-8624	SUMMIT ENGINEERING & DESIGN	65460 W LAKE AHMEER RD	IRON RIVER	WI	54847
CARLTON	ROWLANDS	(414) 257-4200	T N & ASSOCIATES INC	1033 N MAYFAIR RD STE 200	MILWAUKEE	WI	53226
ROGER	STROHM	(414) 257-4200	T N & ASSOCIATES INC	1033 N MAYFAIR STE 200	MILWAUKEE	WI	53226
GREGG	BORUCKI	(608) 727-2146	TEAM ENGINEERING	250 MAIN ST PO Box 117	LOGANVILLE	WI	53943
MICHAEL	TIRY	(715) 723-6777	TIRY ENGINEERING	220½ N BRIDGE ST PO Box 44	CHIPPEWA FALLS	WI	54729
MAX	ANDERSON	(608) 348-7593	UNIVERSITY OF WISCONSIN	1 UNIVERSITY PLZ	PLATTEVILLE	WI	53818
GARY	BLAZEK	(608) 233-5800	VIERBICHER ASSOCIATES	6200 MINERAL POINT RD	MADISON	WI	53705
CHARLES	NAHN	(608) 233-5800	VIERBICHER ASSOCIATES	6200 MINERAL POINT ROAD	MADISON	WI	53705
ZAHID	BASHIR	(608) 524-6468	VIERBICHER ASSOCIATES INC	400 VIKING DR PO Box 379	REEDSBURG	WI	53959
FRANKLIN	BREY	(608) 524-6468	VIERBICHER ASSOCIATES INC	400 VIKING DR PO Box 379	REEDSBURG	WI	53959
KEN	DENIS	(920) 582-4870	VIERBICHER ASSOCIATES INC	400 VIKING DR PO Box 379	REEDSBURG	WI	53959
JOSEPH	DORAVA	(608) 524-6468	VIERBICHER ASSOCIATES INC	400 VIKING DR PO Box 379	REEDSBURG	WI	53959
BRIAN	KOBER	(262) 677-9696	VILLAGE OF JACKSON	N168W20733 MAIN ST	JACKSON	WI	53037
DAVID	MURPHY	(262) 677-1710	VILLAGE OF JACKSON	N168W20733 MAIN ST	JACKSON	WI	53037
MATTHEW	CLARK	(608) 273-0592	W F BAIRD & ASSOCIATES	2981 YARMOUTH GREENWAY	MADISON	WI	53711
DAVID	WERREN	(608) 273-0592	W F BAIRD & ASSOCIATES LTD	2981 YARMOUTH GREENWAY	MADISON	WI	53711
ROGER	THIEL	(800) 558-7800	WALTERS BUILDINGS	6600 MIDLAND CT PO Box 388	ALLENTON	WI	53002
BRUCE	ZELLNER	(262) 335-4800	WASHINGTON CTY LAND CONS DEPT	333 E WASHINGTON ST STE 3200	WEST BEND	WI	53095
NORMAN	HANSON	(262) 646-6855	WELCH HANSON & ASSOC INC	35 AUSTIN CIR STE 100	DELAFIELD	WI	53018
MARK	MICKELSON	(262) 646-6855	WELCH HANSON & ASSOC INC	35 SUSTIN CIR STE 100	DELAFIELD	WI	53018
WILLIAM	OLIVA	(608) 246-7911	WILLIAM L OLIVA	18 FIRESTONE CT	MADISON	WI	53717
DALE	WILEY	(920) 433-1673	WISCONSIN PUBLIC SERVICE CORP	600 N ADAMS ST PO Box 19002	GREEN BAY	WI	54307

Appendix K

Rainfall Tables

TABLE 1

Probable 24–hour Rainfall Events, in inches of rain, for counties in Wisconsin

	10–year	25–year
Adams	4.1	4.7
Ashland	3.9	4.3
Barron	4.1	4.6
Bayfield	3.9	4.4
Brown	3.7	4.3
Buffalo	4.3	4.8
Burnett	4.0	4.6
Calumet	3.8	4.4
Chippewa	4.1	4.7
Clark	4.1	4.7
Columbia	4.1	4.7
Crawford	4.3	5.0
Dane	4.2	4.8
Dodge	4.0	4.6
Door	3.6	4.1
Douglas	3.9	4.4
Dunn	4.2	4.7
Eau Claire	4.2	4.7
Florence	3.6	4.1
Fond du Lac	3.9	4.5
Forest	3.7	4.2
Grant	4.3	5.0
Green	4.2	4.8
Green Lake	4.0	4.6
Iowa	4.3	4.9
Iron	3.8	4.3
Jackson	4.2	4.8
Jefferson	4.0	4.6
Juneau	4.1	4.7
Kenosha	4.0	4.6
Kewaunee	3.7	4.2
LaCrosse	4.3	4.9
Lafayette	4.3	4.9
Langlade	3.8	4.3
Lincoln	3.9	4.4
Manitowoc	3.8	4.3
Marathon	4.0	4.5
Marinette	3.6	4.1
Marquette	4.1	4.6
Menominee	3.7	4.3
Milwaukee	3.9	4.5
Monroe	4.2	4.8
Oconto	3.7	4.2
Oneida	3.8	4.3
Outagamie	3.8	4.4
Ozaukee	3.9	4.4
	10–year	**25–year**
Pepin	4.3	4.8
Pierce	4.2	4.8
Polk	4.1	4.7
Portage	4.0	4.5
Price	4.0	4.4
Racine	4.0	4.6
Richland	4.3	4.9
Rock	4.1	4.7
Rusk	4.1	4.6
St. Croix	4.2	4.7
Sauk	4.2	4.8
Sawyer	4.0	4.5
Shawano	3.8	4.4
Sheboygan	3.8	4.4
Taylor	4.1	4.6
Trempealeau	4.3	4.8
Vernon	4.3	4.9
Vilas	3.8	4.3
Walworth	4.1	4.6
Washburn	4.0	4.5
Washington	3.9	4.5
Waukesha	4.0	4.6
Waupaca	3.9	4.5
Waushara	4.0	4.6
Winnebago	3.9	4.5
Wood	4.1	4.6

Note: The data of table 1 were obtained by extrapolation from maps published by the National Weather Service in Technical Paper No. 40, "Rainfall Frequency Atlas of the United States".

10 Year 24 Hour Rainfall (Inches)

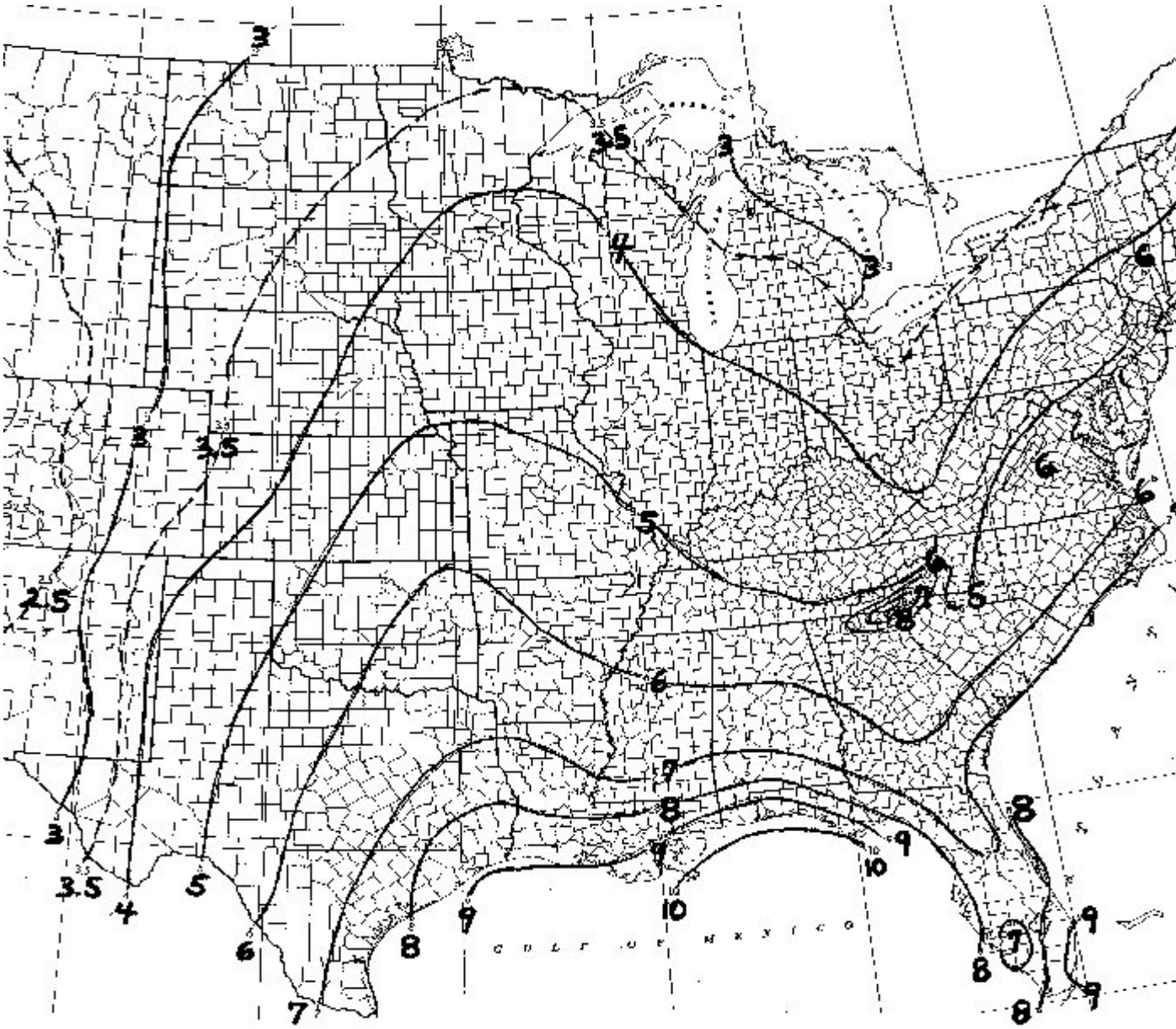

25 Year 24 Hour Rainfall (Inches)

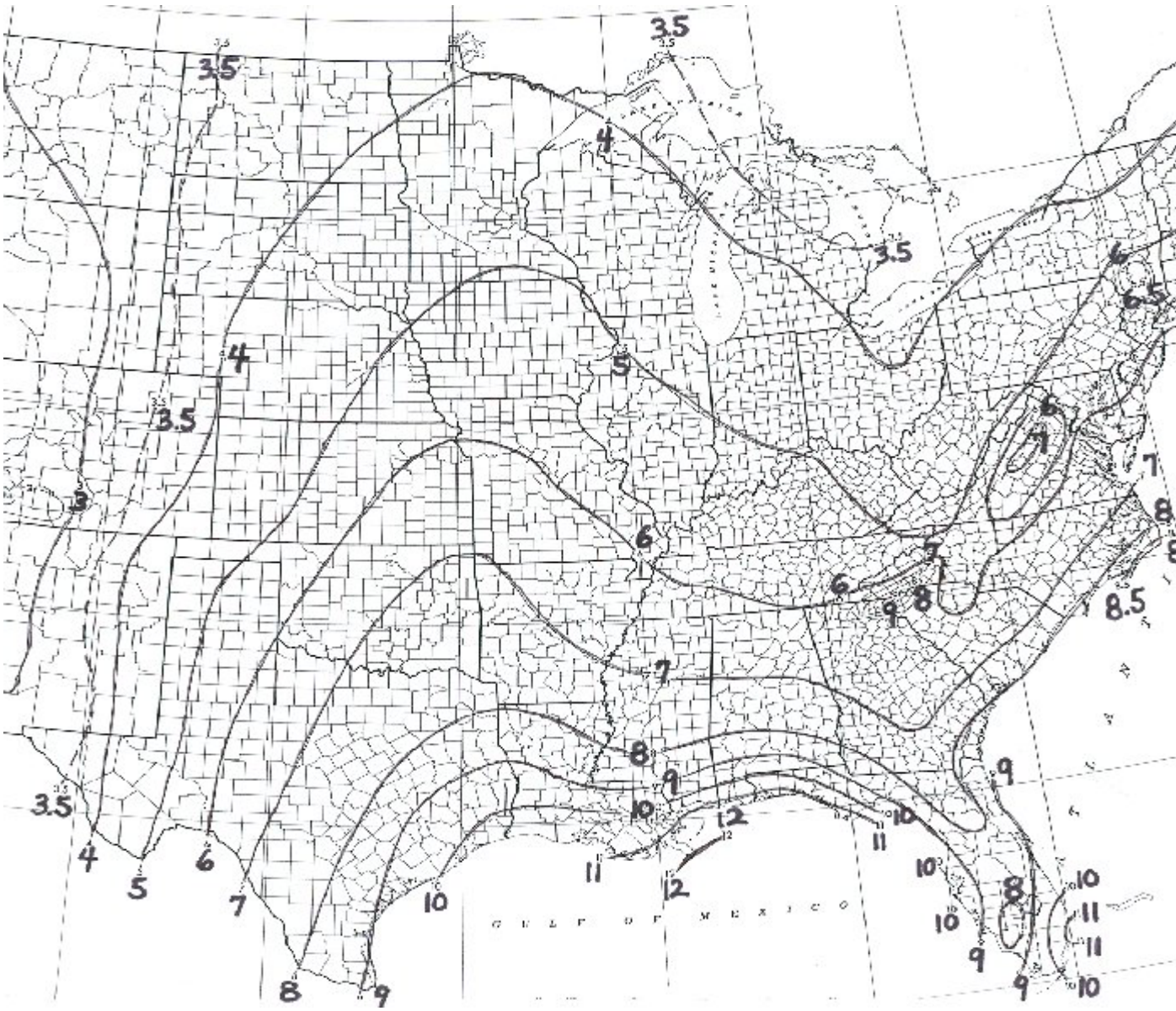

Appendix L

Memoranda of Understanding and Agreement

MEMORANDUM OF UNDERSTANDING
Between the
Wisconsin Department of Agriculture, Trade and Consumer Protection
and
Wisconsin Department of Natural Resources
Regarding Drainage Districts

I. Purpose

This Memorandum of Understanding (MOU) between the Wisconsin Department of Agriculture, Trade and Consumer Protection (DATCP) and Wisconsin Department of Natural Resources (DNR) is intended, to the fullest extent possible, to:

1) Promote interagency coordination and cooperation so that both agencies can effectively and efficiently meet their regulatory responsibilities with respect to drainage districts and drainage boards established under ch. 88, Stats.
2) Provide for concurrent DATCP and DNR review of and decisions on drainage profiles, navigability determinations, compliance plans required by s. ATCP 48.22(2), Wis. Adm. Code, and permit applications under chps. 30, 31, and 88, Wis. Stats.
3) Improve the communication of DATCP and DNR decisions and determinations to drainage boards.
4) Resolve in a timely manner conflicts between the agencies over interpretations of law or application of standards.

II. Authority

This MOU establishes a framework for DATCP and DNR to carry out their roles and responsibilities in administering the Wisconsin statutes that regulate drainage districts (ch. 88, Wis. Stats.) and navigable waters and wetlands (chs. 30 and 31, Stats., s. 88.31, Stats., s. 281.15, Stats., s. 281.17(10), Stats., s. 281.36 (2), Stats., s. 281.37, Stats.).

Ch. 88, Stats., ch. ATCP 48, Wis. Adm. Code, and other applicable laws govern drainage districts. Drainage boards are primarily responsible for administering drainage districts. Drainage boards and landowners have the authority, responsibilities and rights specified under ch. 88, Stats., and ch. ATCP 48, Wis. Adm. Code. DATCP is responsible under ch. 88, Stats., for assisting drainage boards.

DNR is responsible for administering state laws that regulate activities affecting waters and wetlands of the state including, but not limited to, all waters declared navigable under s. 30.10, Stats., dam construction in non-navigable waters and any dredging or wetland filling. DNR is also responsible for protecting the rights of the public in said waters. Any activity regulated under said statutes and applicable administrative codes may not be detrimental to the public rights in said waters.

This MOU was developed pursuant to the authority granted to DATCP and DNR by the applicable statutes and administrative rules promulgated thereunder. Nothing in this MOU grants new statutory authority to or amends the statutory authorities and responsibilities of DATCP, DNR or drainage boards. Nothing in this MOU amends or limits the rights and responsibilities of landowners in drainage districts.

III. Scope

This MOU applies to decisions of DNR and DATCP regarding any sections of the following waterways located in a drainage district[1]:

1) Drainage ditches classified as navigable waters under s. 30.10, Stats.[2]
2) Natural non-navigable streams (including ditches created from such streams) on which an applicant proposes to construct a dam.[3]
3) Natural non-navigable streams (including ditches created from such streams) that an applicant proposes to dredge[4] except for farm drainage ditches exempt under s. 30.20(1)(c)1, Stats.[5]
4) Farm drainage ditches that an applicant proposes to dredge which are otherwise exempt under s. 30.20(1)(c), Stats., where DNR determines the activity may have a long term adverse effect on cold-water fishery resources or may destroy fish spawning beds or nursery areas.[6]

IV. Responsibilities

The agencies agree to carry out their respective tasks as follows:

---

[1] Ss. 30.01(1nm), 30.12(4m), 30.20(1)(d), and 31.02(7) and (7m), Stats., provide special statutory provisions for structures, deposits, dredging and dams in the Duck Creek Drainage District.

[2] S. 30.10 (4)(c), Stats. states "Notwithstanding any other provision of law, farm drainage ditches are not navigable within the meaning of this section unless it is shown that the ditches were navigable streams before ditching. For purposes of this paragraph, "farm drainage ditch" means any artificial channel which drains water from lands which are used for agricultural purposes." In determining whether lands "are used for agricultural purposes" DNR applies the definition of "agricultural use" in s. 30.40(1), Stats. In determining whether lands are "agricultural lands" under ch. ATCP 48, DATCP applies the definition of "agricultural use" at s. 91.01(1), Stats.

[3] DNR jurisdiction is granted to the extent authorized by s. 31.33, Stats.

[4] S. 30.20, Stats., regulates the removal of materials from the bed of waterways. State v. Dwyer, 91 Wis. 2d 440, (Ct. App. 1979) held that s. 30.20, Stats., applies to the removal of material from the bed of non-navigable as well as navigable waterways. S. 30.20(1), Stats., was amended after the Dwyer decision by adding par. (c) as shown in footnotes 5 and 6.

[5] S. 30.20(1)(c)1. and 3., Stats., states "1. Except as provided under subd. 2., a person may remove material from the bed of a farm drainage ditch which was not a navigable stream before ditching....3. A person who proposes a removal under subd. 1. which may have an effect on cold-water fishery resources or may affect fish spawning beds or nursery areas shall notify [DNR] at least 10 days prior to the removal."

[6] S. 30.20(1)(c)2., Stats., states "[DNR] may require a permit ... for a removal under subd. 1 only if it finds the proposed removal may have a long-term adverse effect on cold-water fishery resources or may destroy fish spawning beds or nursery areas."

1) To the extent possible, DATCP and DNR will consult with each other and with drainage boards and their consultants to discuss any project information available prior to receipt of permit applications.

2) Each agency shall forward a copy of any grade profile proposal, compliance plan or permit application to the other within 5 business days of initial receipt.

3) On receipt, DNR will review a proposed grade profile or compliance plan utilizing the best available information. Within 10 days of receipt, DNR will indicate in writing to DATCP, the applicable drainage board and any consultant to the board whether DNR considers any waterways or wetlands within the project area subject to DNR jurisdiction, and if so, what regulations or permit requirements apply.

4) If there is any known or claimed DNR jurisdiction, DATCP will consult with DNR as early as possible in order to meet the scheduled time frames established under ss. ATCP 48.20 and 48.38, Wis. Adm. Code.

5) If DATCP approves the grade profile or compliance plan based on standards within its authority and DNR determines the profile or plan meets the applicable statutory and administrative code standards within its authority, DNR will, pursuant to ss. 88.31[7] or 30.20(1) and (2)(c), Stats.[8], issue long-term dredging permits (valid for 10 years) to the drainage board permit applicant to allow for maintenance dredging of the drainage ditch(es).

6) DNR will make every effort to review projects and permit applications in order to meet the scheduled time frames established under ss. ATCP 48.20 and 48.38, Wis. Adm. Code. If DNR does not have a completed permit application or otherwise cannot process the permit within the deadlines for the DATCP decision, DNR will provide DATCP a preliminary determination to the extent possible based on the available information. The preliminary determination for project approvals may include identification of those portions of the project that could proceed immediately, those portions of the project that may be problematic, any sensitive areas or areas of special natural resource interests, or the potential existence of any threatened or endangered species. DNR shall also forward a copy of its preliminary determination to the appropriate drainage board and will identify for the drainage board any outstanding information DNR needs and any steps that remain in the decision process. DNR will also provide an anticipated date by which DNR will make its final decision.

7) In the event of disagreements between DNR and DATCP regarding grade profiles or compliance plans, DATCP will extend the deadline for its approval or disapproval as authorized by s. ATCP 48.38(2), Wis. Adm. Code, and DATCP and DNR shall

---

[7] S. 88.31, Stats., states "(1) If it is necessary to enter upon any waters that may be navigable, or to acquire and remove any dam or obstruction from the waters, or to clean out, widen, deepen or straighten any stream that may be navigable, the [drainage] board shall file with ...[DNR] an application for a permit to do the work."

[8] See footnotes 3-5; s. 30.20(2)(c), Stats., states "A permit to remove material from the bed of any ... stream ... may be issued by ...[DNR] ... for up to 10 years...."

promptly implement the Dispute Resolution process identified in Sec. V below.

8) DATCP and DNR staff shall meet on a quarterly basis unless otherwise mutually agreed upon by both parties. The meetings will be opportunities to exchange information, discuss problems associated with the MOU and propose solutions, and any other appropriate issues.

9) DATCP and DNR shall share mailing lists of drainage districts, consultants, staff, and any other appropriate information to facilitate the exchange of information. DATCP and DNR will seek opportunities to provide information through newsletters, mailing or regularly scheduled meetings that will help achieve the purpose of this MOU.

10) DATCP and DNR shall promote interagency cooperation and participation in annual state level coordination and training sessions including presenting projections of the number, types and locations of projects for the next year, data on performance of the MOU process, and new technological or regulatory methods. DNR will invite DATCP staff to attend and present information at its statewide staff meetings and training sessions. DATCP will invite DNR staff to attend and present information at its drainage board workshops and will inform DNR as soon as it is made aware of the time for any meetings of the Wisconsin Association of Drainage Districts.

V. Dispute Resolution

Whenever possible, DATCP and DNR staff shall meet to resolve issues that arise during the term of this MOU, including problems with complying with the MOU and situations where DATCP and DNR disagree with the interpretation of this MOU or any rights or obligations arising thereunder.

Any DATCP or DNR staff member may request a meeting by notifying their respective representative, the DATCP State Drainage Engineer (Drainage Engineer) or the DNR Chief Waters and Wetlands Biologist (Chief Biologist). The Drainage Engineer or Chief Biologist shall schedule a meeting with all parties necessary to resolve the dispute, and use his or her best efforts to hold the meeting no later than 7 days after the Drainage Engineer or Chief Biologist receives the meeting request. The Drainage Engineer or Chief Biologist scheduling the meeting shall notify all necessary parties by telephone, email or fax of the meeting date, time, and place and specify the issue(s) to be discussed.

At the meeting, the Drainage Engineer, Chief Biologist, drainage board and any other parties necessary to resolve the dispute shall discuss the facts and information on which their concern is based and suggest options for resolution. If the dispute is not resolved at this meeting, the Drainage Engineer or Chief Biologist who scheduled the initial meeting shall schedule a meeting between the Directors (or their designees) of the DATCP Bureau to which the Drainage Engineer is assigned and the DNR Bureau to which the Chief Biologist is assigned, and use his or her best efforts to hold the meeting no later than 14 business days after the first meeting. The participants in the initial meeting shall provide factual information and notes from that meeting to their respective Bureau Directors. If the Bureau Directors are unable to

resolve the dispute, the matter will be referred to the appropriate DATCP and DNR Division Administrators for resolution.

Unless otherwise provided in this MOU, the parties shall continue to perform according to the terms and conditions of the MOU during the pendency of any litigation or other dispute resolution proceeding.

VI. Duration of Agreement

This MOU is effective upon signature by authorized agents of both agencies and will remain in full force and effect until December 31, 2014 unless extended, modified or revoked by mutual agreement or revoked by either agency upon 30 business days written notice to the other agency. This MOU may be modified by written mutual agreement of both agencies. Such modifications will take effect upon signature of the modified document by authorized agents of both agencies.

By: Randy Romanski Date: 9-27-10
Randy Romanski, Secretary
Department of Agriculture, Trade and Consumer Protection

By: Date: 12-9-10
Matthew J. Frank, Secretary
Department of Natural Resources

NOTES